DLT-1142601

SINGLE THRESHOLD SHOWER BASE

RECTANGULAR

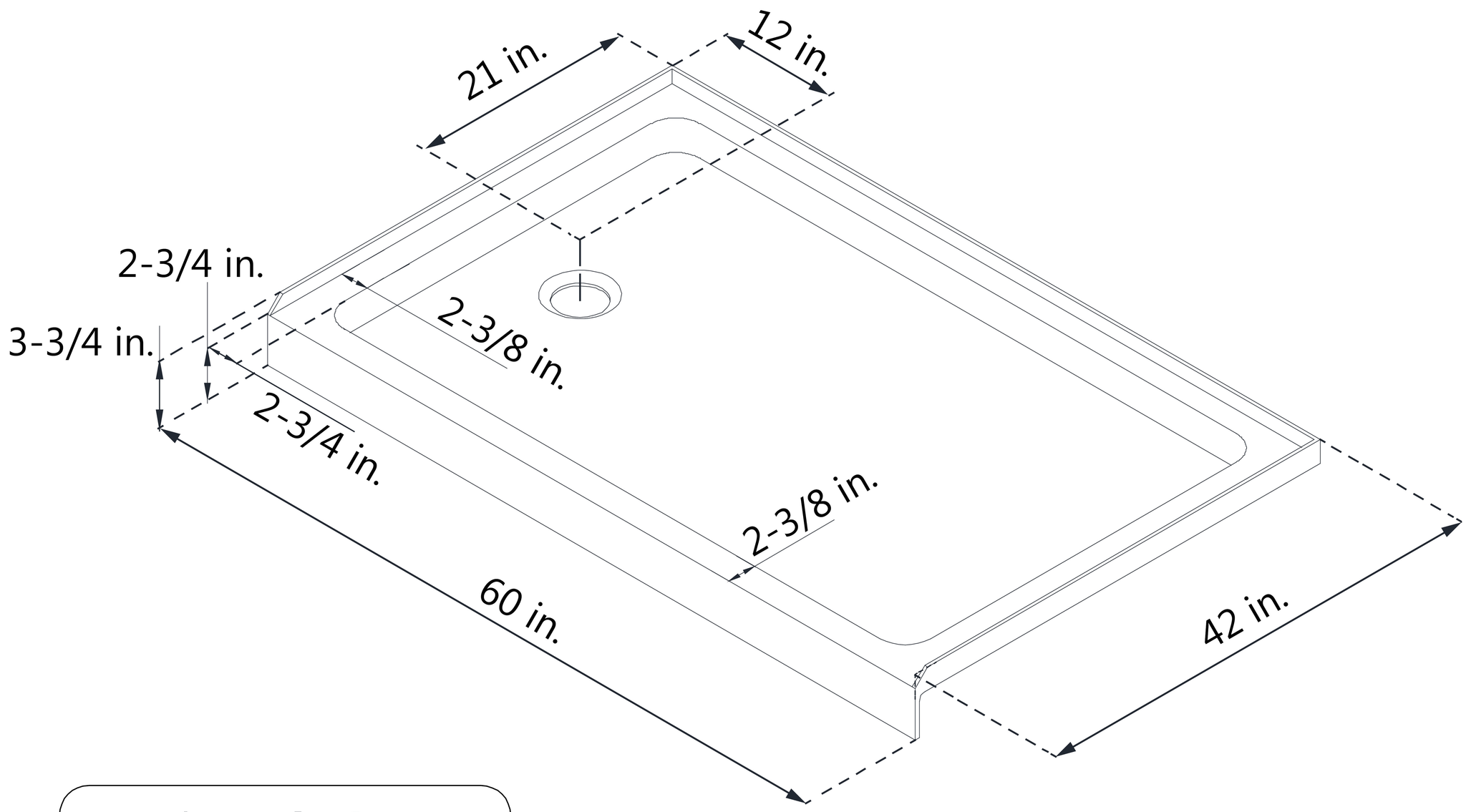

Drain Hole Specs

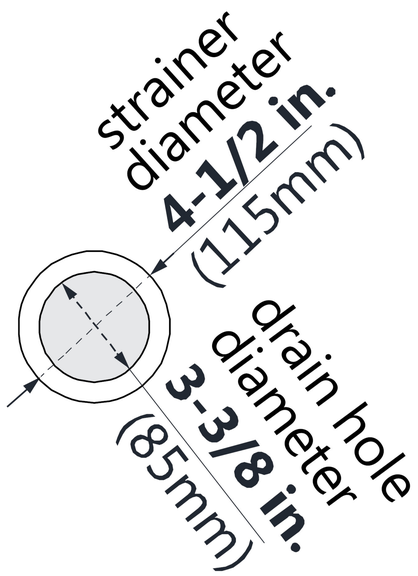

DreamLine reserves the right to update or modify the hardware or materials pictured without prior notice for the purpose of product improvement and customer satisfaction.