UNIDOOR PLUS (STYLE I)

SHOWER DOOR & GLASS PANEL INSTALLATION INSTRUCTIONS

IMPORTANT

DreamLine® reserves the right to alter, modify or redesign products at any time without prior notice. For the latest up-to-date technical drawings, manuals, warranty information or additional details please refer to your model's web page on **DreamLine.com**

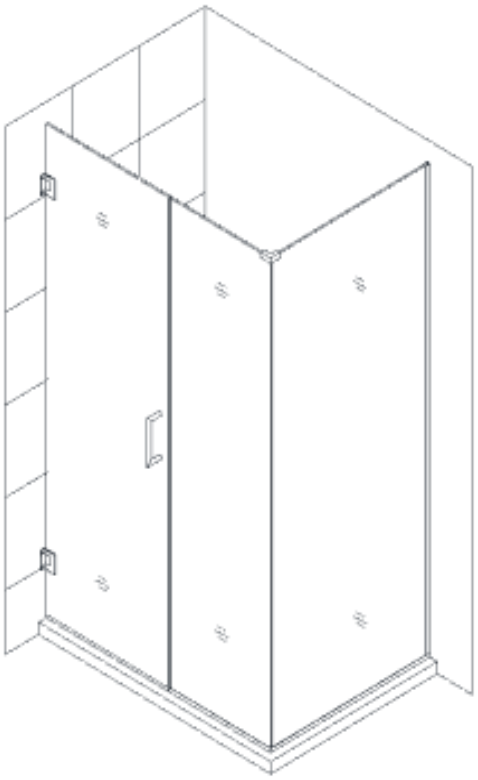

STYLE I

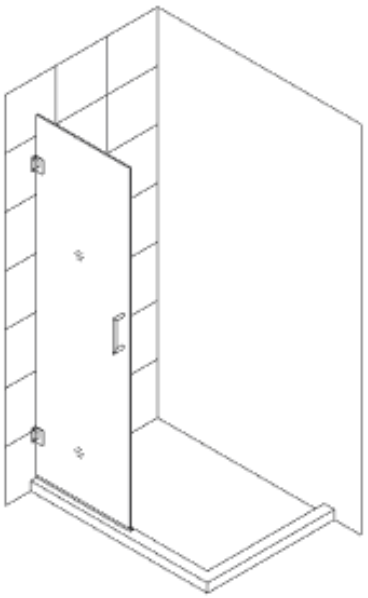

STEP 1: **Install Shower Door**

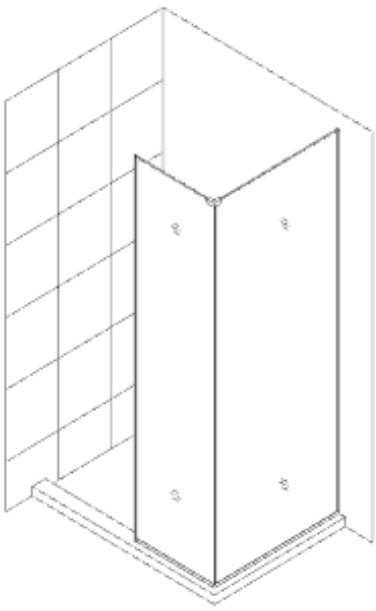

STEP 2: **Install Panels**

Questions?

*Please Call **DreamLine** Customer Support:* **1-855-831-2126**

Hours of Operation M-F 8AM - 7PM EST and Saturday 9AM - 5PM EST

Support@DreamLine.com

For more information about DreamLine Shower Doors, Tub Doors and Enclosures, please visit DreamLine.com

©2017 DreamLine. All Rights Reserved

UNIDOOR

see pages 5-6 for related model styles

Shower Door Installation Instructions (for Single Door)

PLEASE REVIEW THIS ENTIRE MANUAL PRIOR TO INSTALLATION

Model #s:
SHDR-20237210F-##
SHDR-20247210F-##
SHDR-20257210F-##
SHDR-20267210F-##
SHDR-20277210F-##
SHDR-20287210F-##
SHDR-20297210F-##
SHDR-20307210F-##

= Finish:
01 = Chrome
04 = Brushed Nickel
06 = Oil Rubbed Bronze
09 = Satin Black

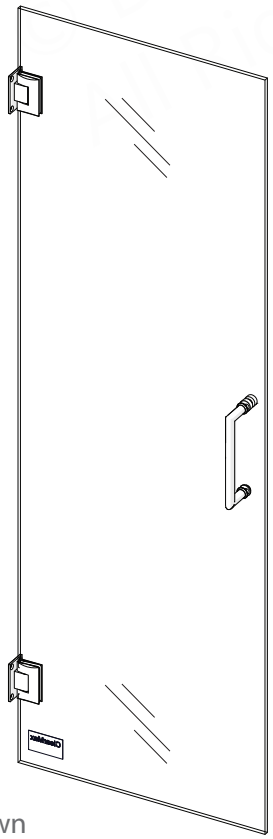

left-swing installation shown

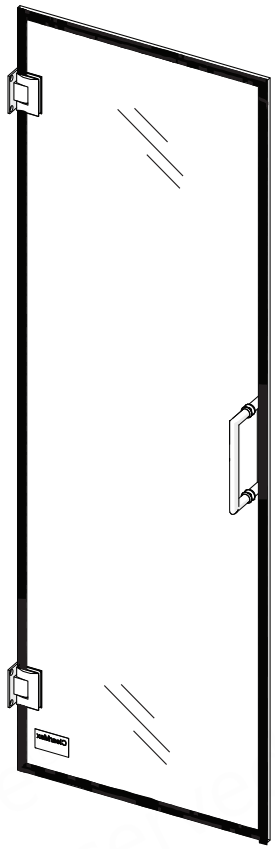

Model #:
SHDR-202472E-09
UNIDOOR EDGE

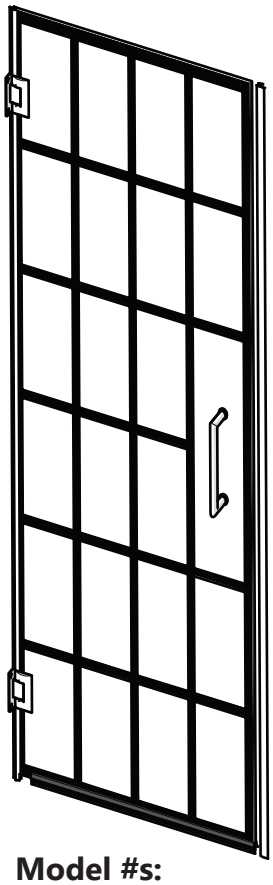

Model #s:
SHDR-2428720-89
SHDR-2430720-89
SHDR-2424720-89
UNIDOOR TOULON

© DreamLine® All Rights Reserved

IMPORTANT!
DreamLine® reserves the right to alter, modify or redesign products at any time without prior notice for the purpose of product improvement and customer experience. Please refer to the model's web page on **DreamLine.com** for the latest technical drawings, installation manuals, warranty information or additional product details.

Do Not Return Product to the Store. Contact DreamLine® with any questions

Questions?
Please contact DreamLine Customer Support
*See **DreamLine.com** for hours of operation*

Support@DreamLine.com
1-866-731-2244

©2026 DreamLine® All Rights Reserved

DREAMLINE®
dream in style

©2026 DreamLine® All Rights Reserved

Do not remove ClearMax stickers until glass is installed.

CLEARMAX®

This model is treated with DreamLine's exclusive ClearMax™ Glass technology. This is a specially formulated coating that prevents the build up of soap and water spots.

Install the surface with the ClearMax™ label towards the inside of the shower. Please note that depending on the model, the glass may be coated on either one or both surfaces.

For best results, squeegee the glass after each use and dry with a soft cloth.

Record the following purchase information for your records or in the event you need to contact DreamLine®:

Purchase Order Number _____

Installation Date _____

Installed By: _____

Store/Vendor Purchased From _____

OD Number* (optional) _____
*located on the shipping box or label if available

SKU Number _____

Table of Contents

Section Title	Page #
ClearMax® Coating Information	—
Warnings and General Preparation	2
Required Reinforcement Information	3
Unidoor Glass-to-Wall Hinge & Handle Location	4
Unidoor Styles	5-6
Model Specific Preparation	7
Tools	8
Detailed Diagram of Shower Door Components	9
Parts List	10
Specifications	11
Installation Steps	12-22
PVC Hinge Spacer Information (if necessary)	13
Handle Assembly Installation	17
Sweep Vinyl Seal Installation	18
Hinge Side Vinyl Seal Installation	19-20
Hinge Assembly Adjustment Procedure	21
L-Strike Vinyl Seal Installation {for single shower door installation only}	22
Product Maintenance	24
Troubleshooting	25
Factory Parts Information (UNIDOOR/-LS/ PLUS/ -X)	26
Factory Parts Information (UNIDOOR EDGE)	27
Factory Parts Information (UNIDOOR TOULON)	28

Symbol Legend

TIP **TIP** - for ease of installation.

CORRECT - recommended.

NOTE **NOTE** - take note of special feature; additional information.

INCORRECT - not recommended.

REQUIRED - requires special attention; signifies a warning.

Average Installation Time

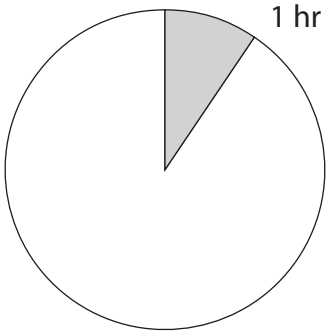

©2026 DreamLine® All Rights Reserved

©2026 DreamLine® All Rights Reserved

IMPORTANT

- DreamLine® reserves the right to alter, modify or redesign products any time without prior notice for product improvement and customer experience. Please refer to the model's web page on **DreamLine.com** for the latest technical drawings, installation manuals, warranty information or additional product details.
- This product should be installed by someone familiar with the construction requirements for this type of project and the care necessary for the safe installation and operation of the product.
- The safety of any installation is the responsibility of the installer.
- Professional installation recommended. *(All Models)*
- Professional installation required. *(Enigma Series)*
- To prevent damage or serious injury, Do Not lean against the installed panel/door/glass.
- To prevent damage or serious injury: Do Not attempt to lift or move a heavy lite of glass alone. Use an assistant and/or a professional grade glass suction cup.
- The installation of some models may require drilling down into the threshold. Contact the manufacturer of the base, tub, or threshold material with any questions regarding the drilling of holes into their product.
- All drawings in this installation manual are for illustrative purposes only and are not drawn to scale.

TEMPERED GLASS WARNING

- Your Shower Door Glass Could Shatter Without Warning if Improperly Installed or Mishandled
- Do Not install or operate a shower door if the glass has chipped corners, slivered edges or is otherwise damaged and/or has been dropped or banged into a hard surface such as tile, marble or glass.
- **The main causes of tempered glass breakage are:**
  - Improper handling, storage or installation
  - Misuse/abuse
  - Lack of maintenance
  - Failure to replace damaged glass
  - **Improper handling during storage, unpacking and installation:**
  - Corners and edges are the most susceptible area to damage on a lite of tempered glass and should be protected and handled with care during storage, unpacking, installation and operation. A concentrated point of pressure or impact with a surface harder than itself may cause the tempered glass to shatter. The tempered glass may release immediately, within several hours or even days later.
  - **Incorrect installation of door hardware, rollers, hinges, channels, stopper or glass:**
  - Improper installation may include: loose hardware and/or lack of proper gaskets between the hardware and glass. Additionally, improper alignment of guide rails, wall profiles or other hardware during installation or operation may place stress on the glass edges and cause it to break.
  - This product must be installed by a professional and experienced installer familiar with the safe handling of tempered glass.
  - **Improper use of this product:**
    - Aggressively opening or closing the door may cause trauma to the glass, which can lead to breakage. This may occur immediately or hours or even days later.
    - **The shower door hardware and glass should be inspected periodically:**
      - Instruct the homeowner how to perform a periodic inspection of the shower hardware and glass - some minor adjustments may be necessary based upon the use (or misuse) of the shower door. Ensure that the hardware remains tight and that the door alignment and operation are correct. Any adjustments should be made upon discovery to prevent damage to the product.
      - Additional considerations should be given to the installation of frameless tempered glass products in households with young children or an elderly person due to an increased chance of improper handling. In such cases, alternatives such as shower curtains or grab bars should be considered.

GENERAL PREPARATION

- After opening all boxes and packages, read this introduction carefully. Check that all the items are included in the package by marking off the components on the **"Detailed Diagram of Product Components"** page. Examine all boxes and packages for shipping damage. If the unit has been damaged, has a finishing defect, or is missing parts; please contact our Customer Support department within 3 business days of the delivery date. **Please note that DreamLine® will not replace any damaged products or missing parts free of charge after 3 business days or if the product has been installed.** Please contact DreamLine® if you have any questions.
- **Please note that you should refer to your local building codes with questions on installation compliance standards. Building and plumbing codes may vary by location, and DreamLine® is not responsible for code compliance standards for your project and will not accept any returns.**
- If this unit is going to be installed in a new construction, install all the required plumbing and drainage before installing the shower. **Use a competent and licensed (if required by local code) plumber for all plumbing installation.**
- Make sure that prior to beginning the installation, the surfaces are leveled and solid and will be able to support the total weight of the unit. Also make sure the walls are at right angles. Irregular installation surface level, radius corners or improper angle of side walls will result in serious problems for your installation. Please note that some adjustments and drilling will be necessary during the installation process.
- Protect all primary surfaces of the product during installation. Never set your glass down directly onto a tile floor. Leave corner protectors in place until it is necessary to remove them. Always use a piece of wood or cardboard to protect the bottom edge and corners of the glass prior to and during installation.
- This unit must be installed upon a finished threshold and against finished walls.
- *DreamLine® shower doors are not designed to be installed into a fiberglass surround due to the radius corners and lack of a solid surface to mount the hardware.*

WARNING: TO AVOID THE RISK OF DAMAGE OR INJURY:

- **Follow all recommendations and requirements as shown in the installation instructions.**
- Perform a thorough inspection of the glass and all parts for any damage prior to installation. Any damage to tempered glass can cause breakage.
  Do Not install damaged glass!
- Do Not install or operate a shower or tub door if the glass has chipped corners, slivered edges or is otherwise damaged. Do Not install or operate a shower or tub door that has been dropped or banged into a hard surface such as tile, marble or glass.
- **CAUTION:** Contact with any hard surface can damage tempered glass and cause it to shatter.
- This product uses tempered glass. Glass cannot be cut after it has been tempered.
  Do Not attempt to cut tempered glass.
- DreamLine® Glass Shower doors, Tub doors, Inline panels, and Return panels can shatter due to improper handling or lack of maintenance. Conduct periodic inspections of glass and all parts for possible damage, missing or loose parts.
- Always wear proper safety equipment such as: safety goggles, work gloves and appropriate footwear during the installation process.
- **WARNING. Risk of leakage and/or damage.** Follow all instructions regarding the application of silicone sealant or caulk. Allow 24 hours for the sealant to cure before the initial use of the shower or tub product. Follow the silicone manufacturer's recommendations regarding the use of their product.

- **Thoroughly read these instructions before installing or using this product.**
- **Leave this manual for the end-user of the product.**



This product should be installed by someone familiar with the construction requirements for this type of project and the care necessary for the safe installation and operation of the product.

Required Reinforcement Information

Install DOUBLE STUDS OR install 2”× 6” WOOD BLOCKING between the studs where the hinge assemblies will attach to the wall.

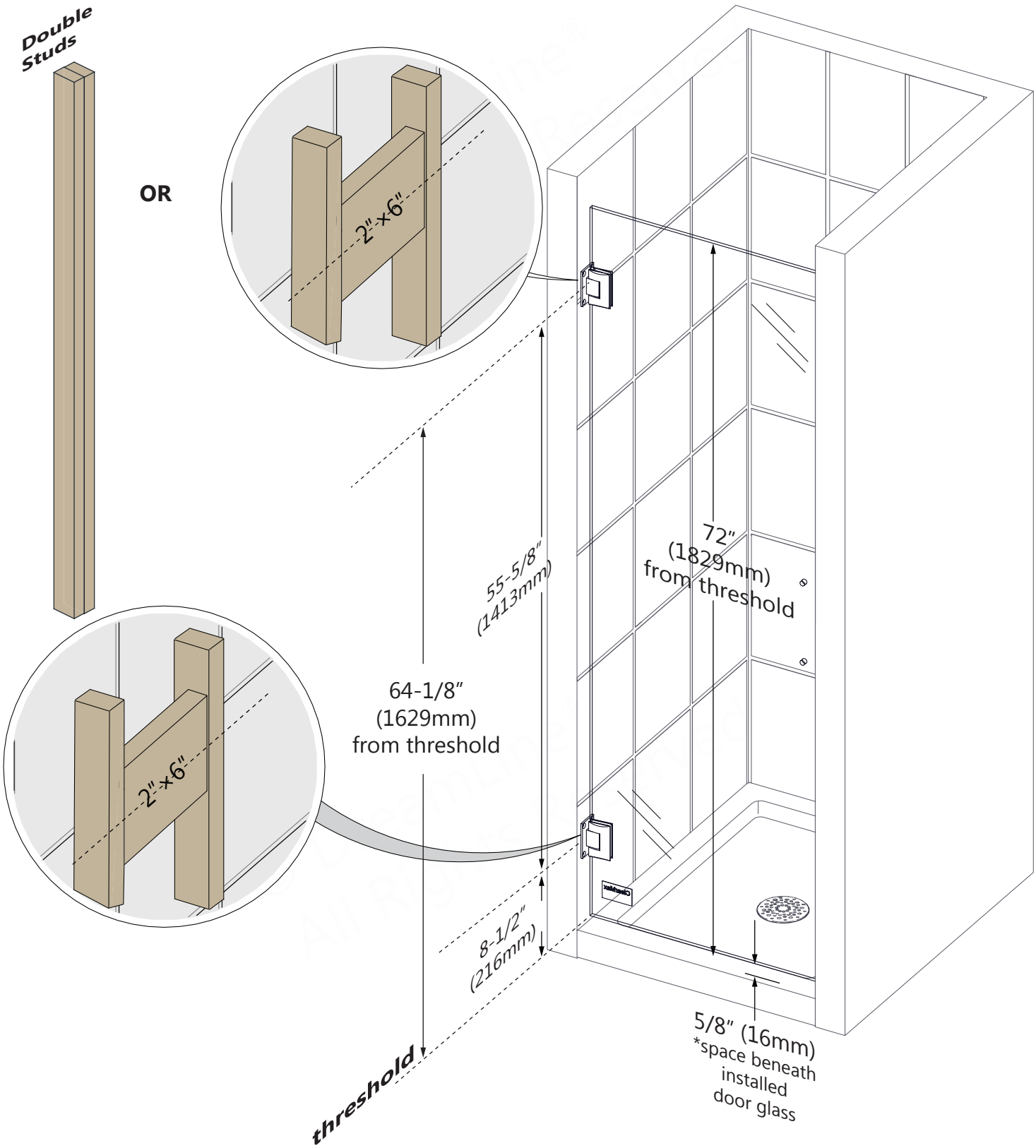

©2026 DreamLine® All Rights Reserved

UNIDOOR Glass-to-Wall Hinge and Handle Location

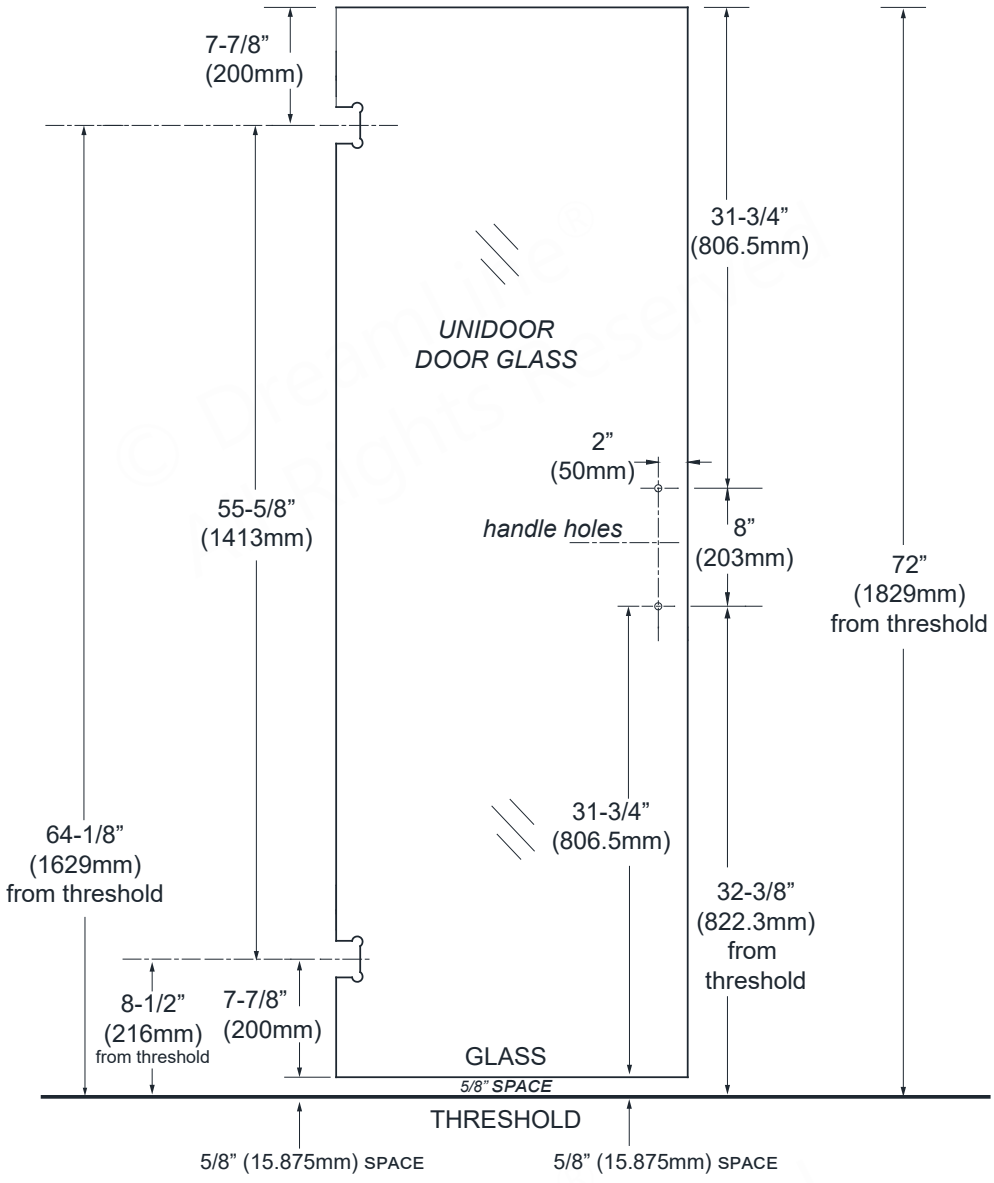

Hinge Assembly Wall Plate Hole Layout

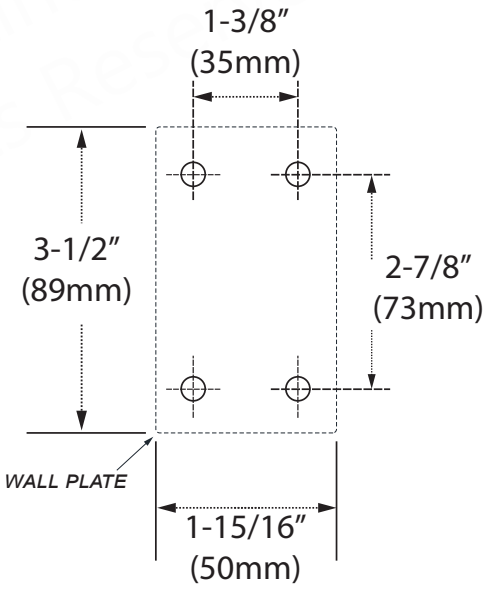

©2026 DreamLine® All Rights Reserved

UNIDOOR / PLUS / -LS / EDGE / TOULON Styles

left door-swing installations shown

NOTE

*** For the panel installation instructions, please refer to the separate manual included in the panel glass packaging.**

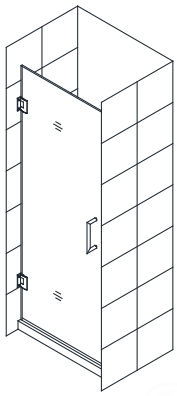

STYLE A

UNIDOOR / UNIDOOR-LS
UNIDOOR EDGE / UNIDOOR TOULON
Single Shower Door 23”-30” (**EDGE** model=24”)
*refer to the **Detailed Diagram** on **Page 9** of this manual to begin the installation.

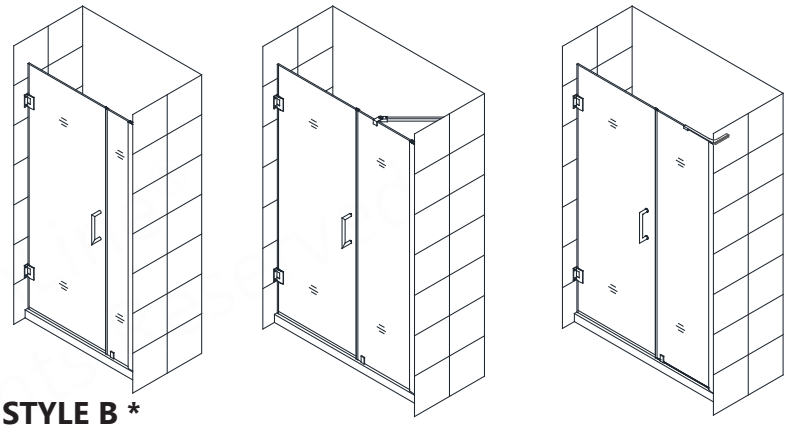

STYLE B *

UNIDOOR Shower Door 23” - 30” with a 6” -30” inline panel; (12”-30” inline panel includes Support Bar); Adjustable Wall Profile System
UNIDOOR-LS Shower Door 23”-30” with 6”-30” inline panel (12”-30” inline panel includes an L-Bar™); back-to-back handle; Adjustable Wall Profile System

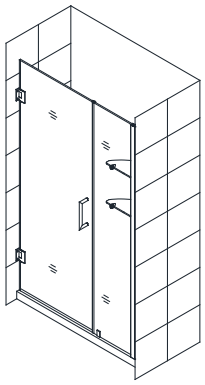

STYLE C *

UNIDOOR Shower Door 23”-30” with 12”-30” inline panel with Support Shelves and Adjustable Wall Profile System

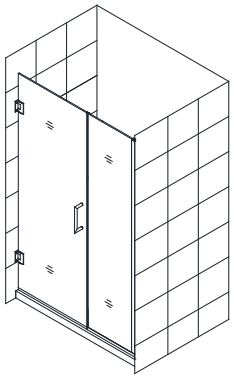

STYLE F *

UNIDOOR PLUS Shower Door 23”-30” with 6”-34” inline panel installed with U-Channels

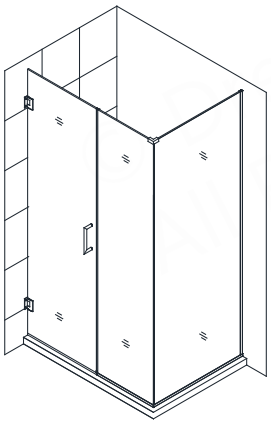

STYLE I *

UNIDOOR PLUS Shower Enclosure with 6”-34” inline panel and 30”-34” return panel installed with U-Channels

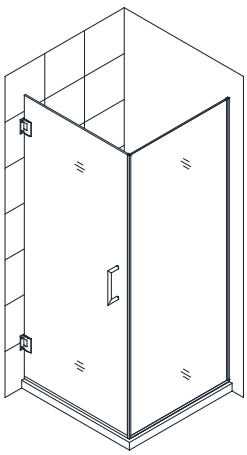

STYLE L *

UNIDOOR PLUS Shower Enclosure with 30” return panel installed with U-Channels

©2026 DreamLine® All Rights Reserved

UNIDOOR-X Styles

left door-swing installations shown

UNIDOOR-X (with glass-to-glass hinges)

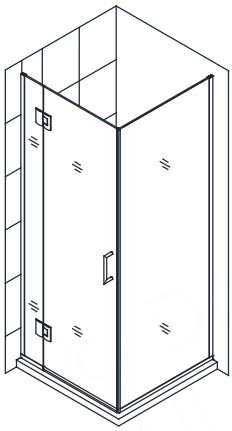

STYLE L1 *^°

UNIDOOR-X Shower 23”-30” with 6” hinge panel and 30”or 34” full height return panel installed with U-Channels

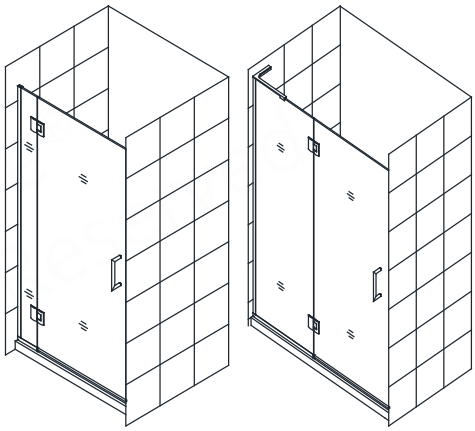

STYLE M *^°

UNIDOOR-X Shower Door 23”-30” with 6” or 24” hinge panel installed with U-Channels

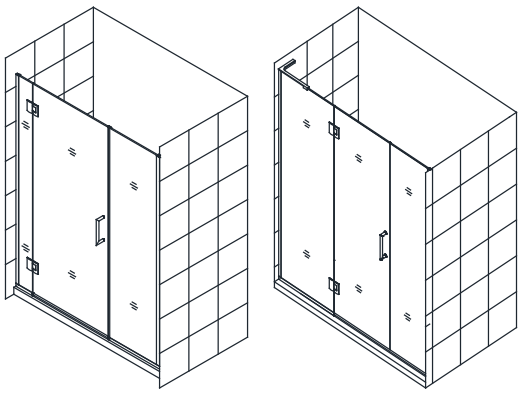

STYLE M1 *^°

UNIDOOR-X Shower Door 23”-30” with 6” or 24” hinge panel and with 6”, 6-1/2”, 14”, 14-1/2”, 22”, or 22-1/2” full height inline panel installed with U-Channels

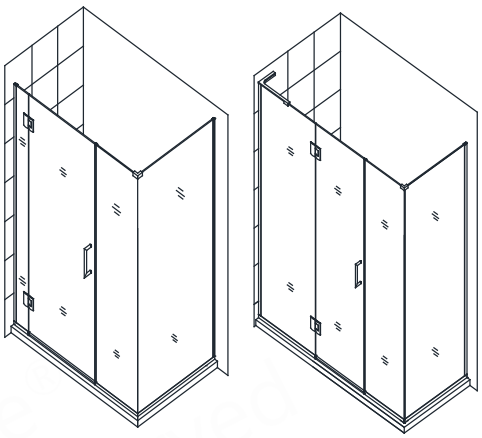

STYLE M3 *^°

UNIDOOR-X Shower Door 23”-30” with 6” or 24” hinge panel with 6”, 6-1/2”, 14”, 14-1/2”, 22”, 22-1/2” full height inline panel and 30”or 34” full height return panel installed with U-Channels

NOTE

*** For the panel installation instructions, please refer to the separate manual included in the panel glass packaging.**

^ For the Unidoor-X glass-to-glass door installation instructions, please refer to the separate manual included in the hinge panel glass packaging.

° Additional support required for hinge panel glass installation:
6” hinge panel requires a hinge panel glass bracket; 24” hinge panel requires an L-Bar™

©2026 DreamLine® All Rights Reserved

Model Specific Preparation

REQUIRED:

No Adjustment for Out-of-Plumb; Verify finished walls with a level

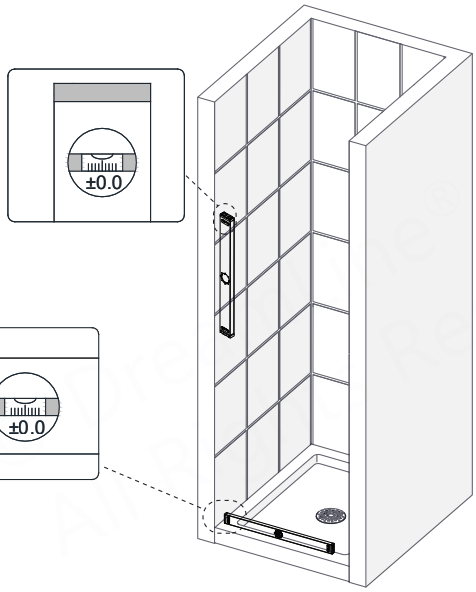

Threshold must be level



The PVC Hinge Spacers (#31) can be used to compensate for a minor out-of-plumb condition on the hinge-side wall up to 1/4" (6mm) and should only be used behind ONE Hinge Assembly (#05). Confirm the finished wall conditions with a level before drilling any holes. Unnecessary use of these spacers can compromise the fit of the door. (see Page 13 for more information)



Leave corner protectors on the glass until it is necessary to remove them!

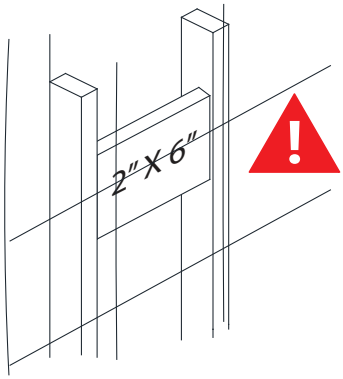

The glass-to-wall hinges require installation into a double stud or 2x6 wood reinforcement. (see page 3 for more information)

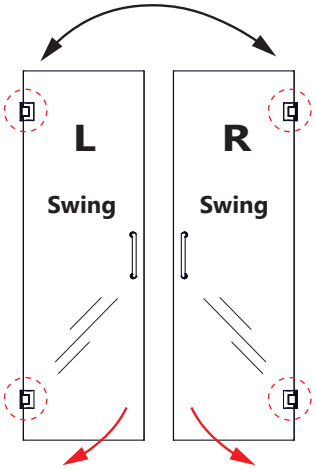

TIP

The UNIDOOR Series doors and enclosures are reversible for right or left-swing installation. The left-swing installation is shown as an example throughout this manual. For the right-swing installation, simply begin on the opposite wall and reverse the orientation of the steps shown.

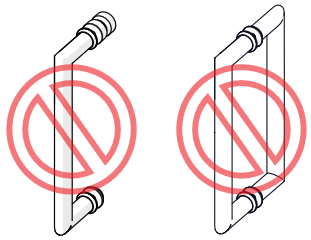

DO NOT attach the Handle to the Door Glass until instructed. DO NOT use the handle to lift the glass during installation. This may result in damage to the glass and/or serious personal injury. Always use an assistant and/or a professional-grade glass suction cup when handling heavy glass panels.

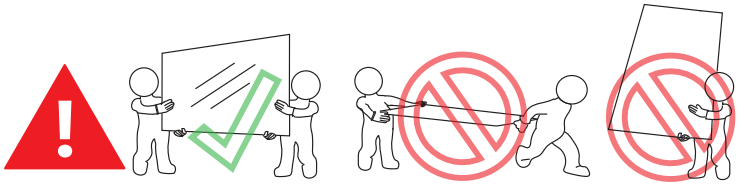

Professional installation and two installers recommended for this model.

©2026 DreamLine® All Rights Reserved

Tools



Level

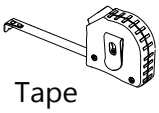

Tape Measure

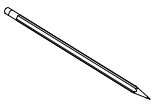

Pencil

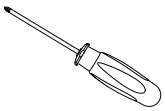

#2 Phillips Screwdriver



Power Drill



#2 Phillips driver bit



Extended driver bit



Drill Bit Ø1/8" (3mm)



Drill Bit Ø1/4" (6mm)



Diamond-Tipped Drill Bit Ø1/4" (6mm) (Optional--for porcelain tile)



Razor Knife

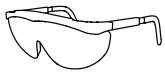

Safety Glasses



Work Gloves

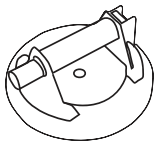

Professional-grade Glass suction cup
(Optional but Recommended)

© DreamLine All Rights Reserved

TIP

Verify that the correct model size has been ordered: measure the finished opening **before** proceeding with the installation.

Confirm that the finished walls are plumb and the threshold is level and pitched into the shower area.

Cover the shower/tub drain with tape prior to installation to prevent the loss of screws or small parts.

To prevent stripping the screw heads, set power drill to a low setting when installing screws.

NOTE

Unpack your unit carefully and inspect it. Lay it out and identify all parts using the **Detailed Diagram** on **page 9** and the included packing list in this manual as a reference. Before discarding the carton, check for small hardware bags that may have fallen to the bottom of the box. If any parts are damaged or missing, please contact DreamLine® for replacement. The shipping boxes may contain extra parts not used in your model configuration.

NOTE

Retain these installation instructions for future reference.

©2026 DreamLine® All Rights Reserved

Detailed Diagram of Shower Door Components

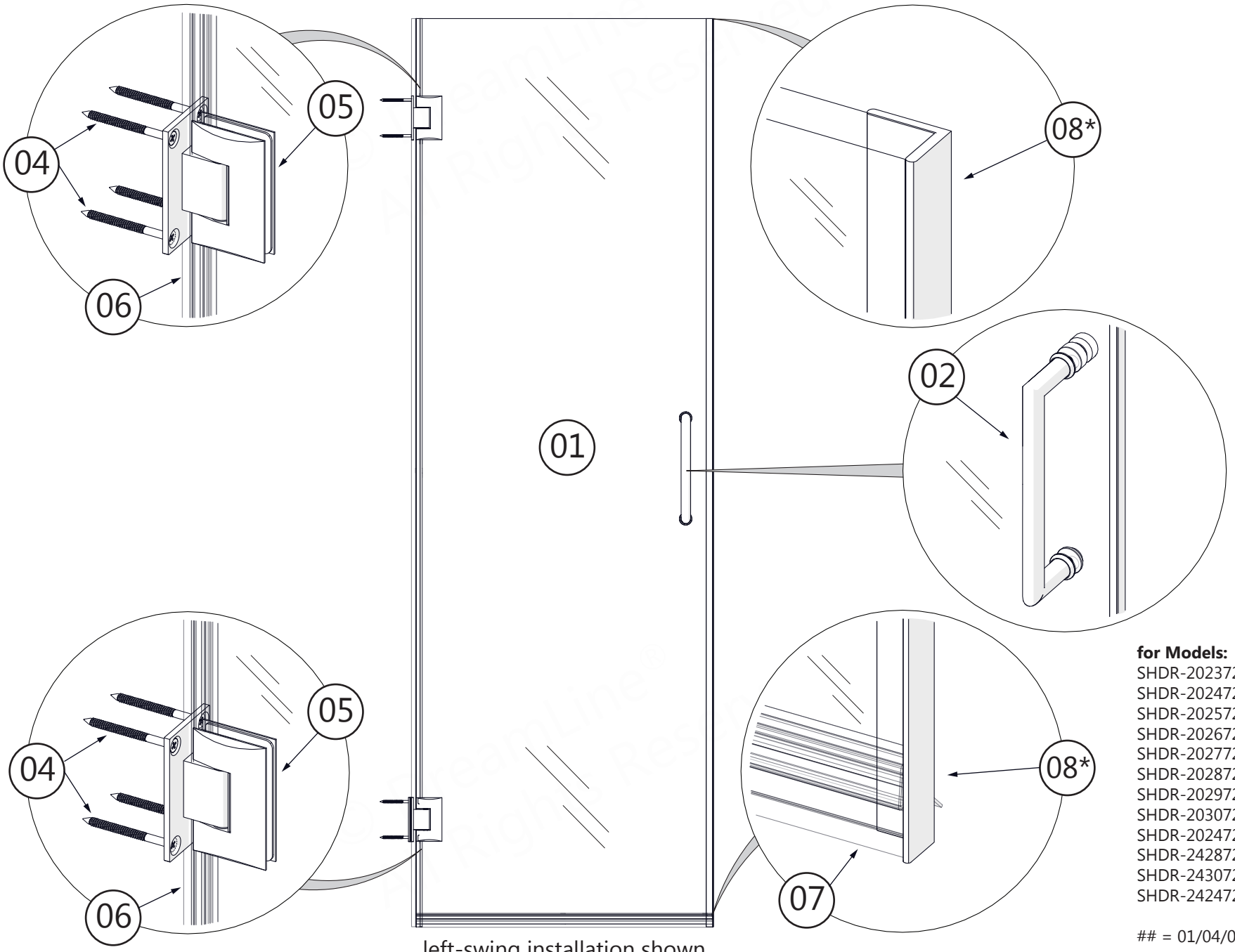

left-swing installation shown

for Models:
SHDR-20237210F-##
SHDR-20247210F-##
SHDR-20257210F-##
SHDR-20267210F-##
SHDR-20277210F-##
SHDR-20287210F-##
SHDR-20297210F-##
SHDR-20307210F-##
SHDR-202472E-89
SHDR-2428720-89
SHDR-2430720-89
SHDR-2424720-89

= 01/04/06/09

©2026 DreamLine® All Rights Reserved

Parts List

01

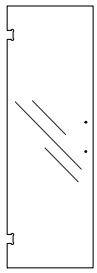

Door Glass x1

02

handle styles may vary by model

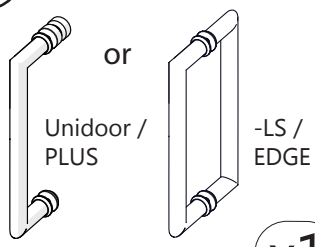

Handle x1

04

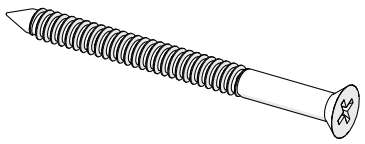

ST5.5 × 70mm Countersunk Screw x8

05

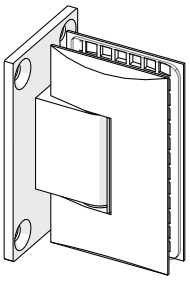

Hinge Assembly x2

06

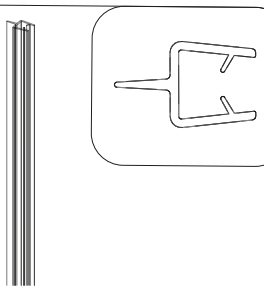

Hinge-Side Vinyl Seal x1

07

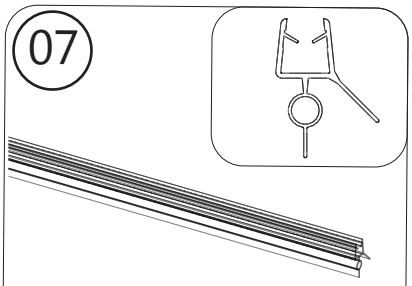

Bottom Sweep Vinyl Seal x1

08*

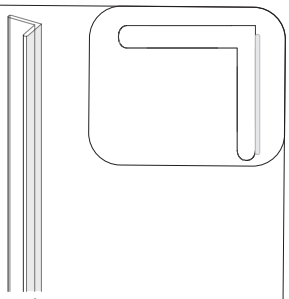

L-Strike Vinyl (with VHB Tape) x1

31^

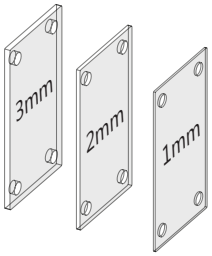

PVC Hinge Spacer (1mm, 2mm, 3mm) 1 set

*** item #08 (L-Strike Vinyl with VHB Tape) used with single door installation only**
^item #31 (PVC Hinge Spacer) use only as necessary

19**

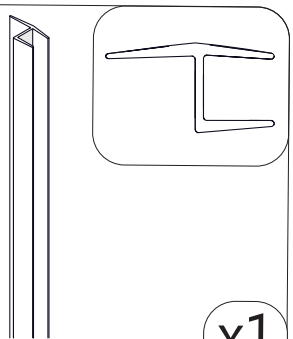

180° Inline Strike Vinyl x1

**** item #19 (180˚ strike vinyl)** ships with the UNIDOOR EDGE door glass and is **not used** with single door installation

©2026 DreamLine® All Rights Reserved

Specifications

NOTE

The following shower door installation instructions should be used as a general guide and prerequisite to the installation of the UNIDOOR, UNIDOOR PLUS, UNIDOOR-LS, UNIDOOR EDGE, UNIDOOR TOULON models. (for Unidoor-X models, use the manual packaged with the hinge panel glass in place of this manual).
Before you begin the installation, check your finished opening size.
Specific model size information can be found in the Tech Drawings on DreamLine.com

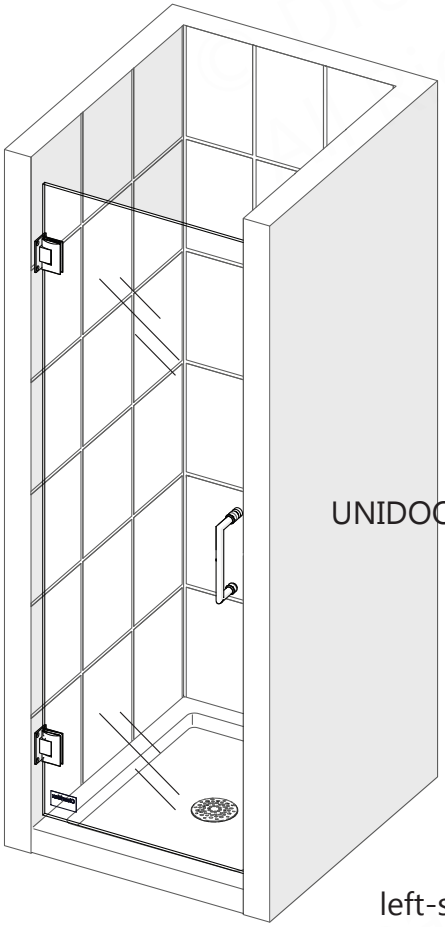

UNIDOOR

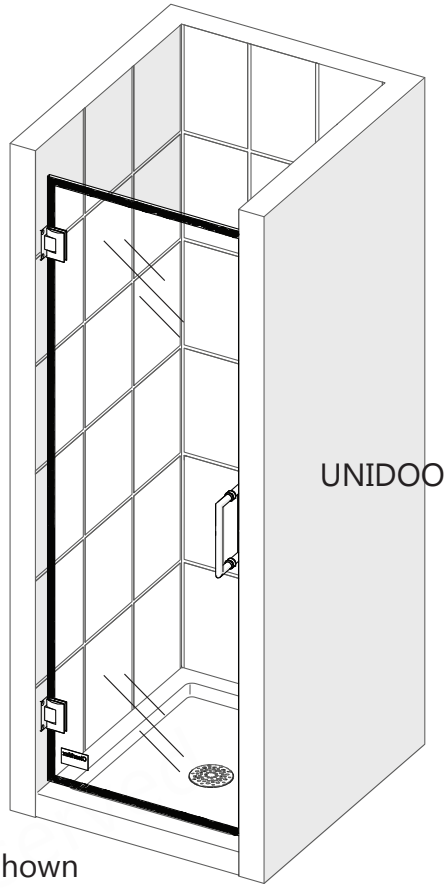

UNIDOOR EDGE

left-swing installation shown

<u>For Enclosure Models that include Return Panel Glass:</u>
<u>Styles: I, J, L, L1, M3 and M4</u>

FIRST, before starting the door installation, <u>it is important to review the Shower Enclosure Plan and Overview in the manual that is packaged with the Return Panel Glass</u> to verify the model dimensions for proper placement of the Door Glass (#01) for accurate alignment with the Enclosure Panel Glass.

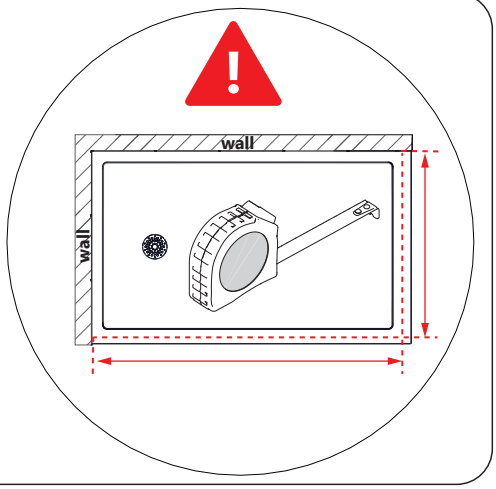

©2026 DreamLine® All Rights Reserved

Installation Steps

1

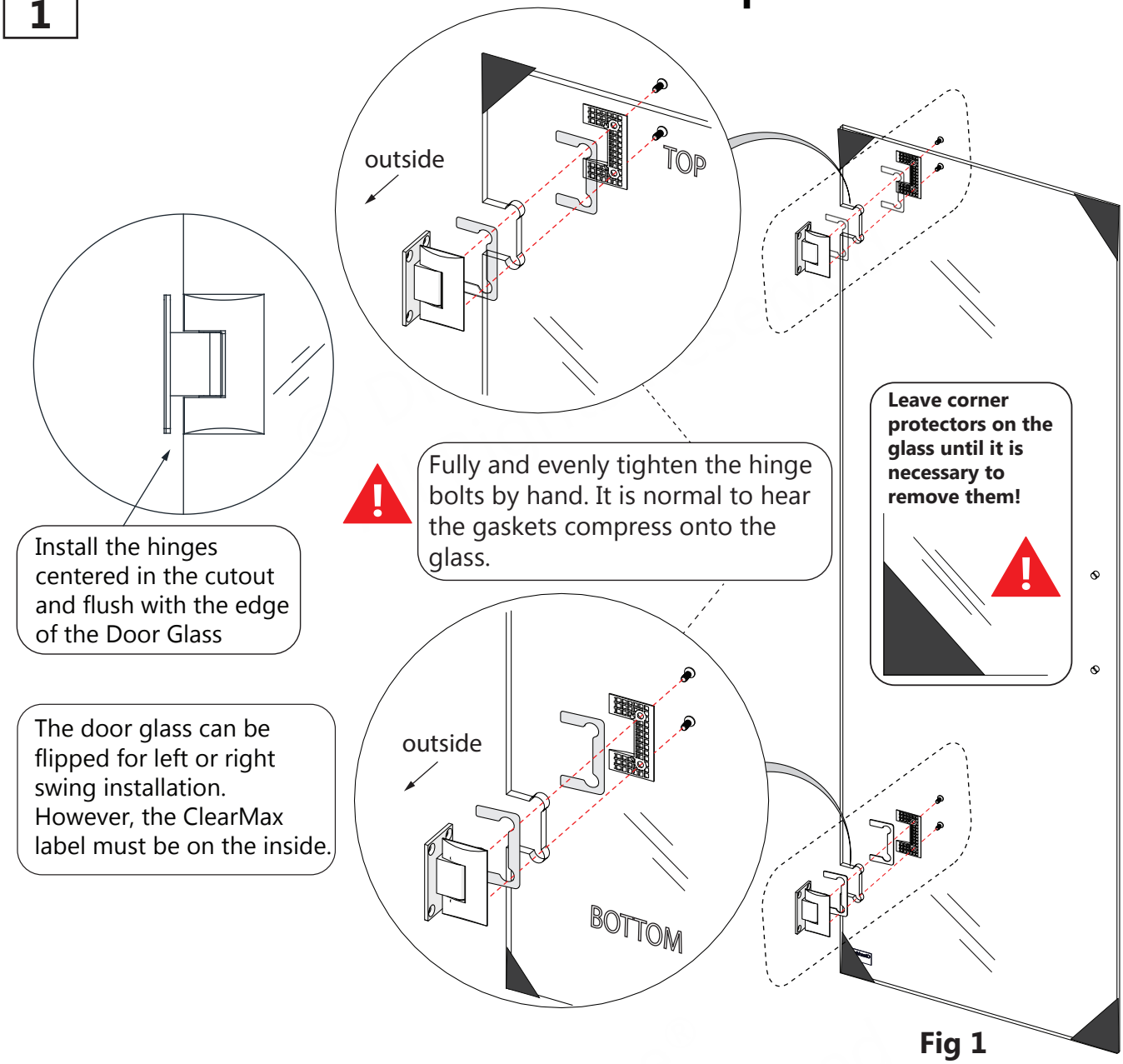

Fig 1

left-swing installation shown

NOTE

The Adjustable Hinge Assemblies are factory pre-set to overclose to 85° to create a tight seal with the Strike Vinyl. See Page 21 for Hinge Adjustment details after installation.

TIP

Clean the **Hinge gaskets** and the glass around the hinge notch with an alcohol swab or glass cleaner prior to attaching the **Hinge Assemblies (#05)** to the **Door Glass (#01)**.

Never set glass down directly onto a tile or concrete floor surface. Always use a piece of wood or cardboard and leave the corner protectors and shims on the glass until it becomes necessary to remove them. Always protect the bottom edge and corners of the glass from damage which could lead to breakage and/or serious personal injury.

Parts Needed

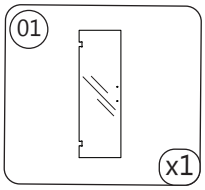

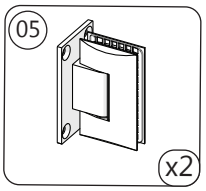

Tools Needed



©2026 DreamLine® All Rights Reserved

1a

PVC Hinge Spacer Information
(use only if necessary)

Hinge side wall out at the top

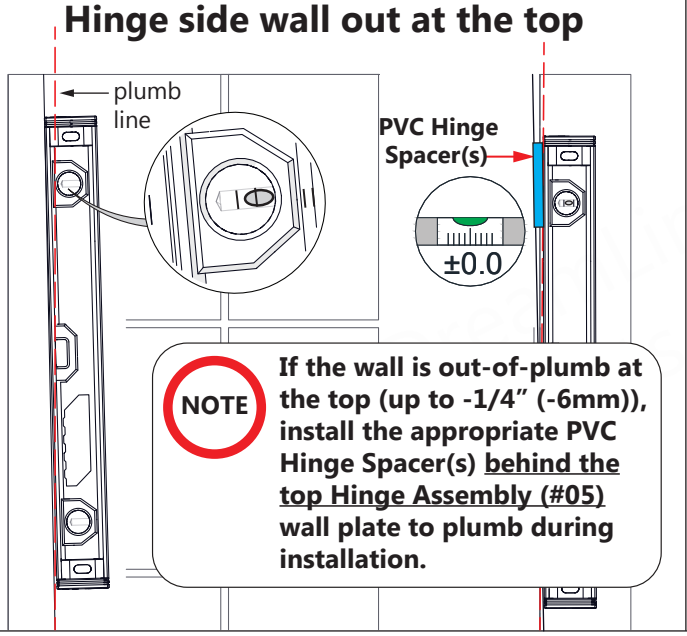

NOTE If the wall is out-of-plumb at the top (up to -1/4" (-6mm)), install the appropriate PVC Hinge Spacer(s) behind the top Hinge Assembly (#05) wall plate to plumb during installation.

Hinge side wall out at the bottom

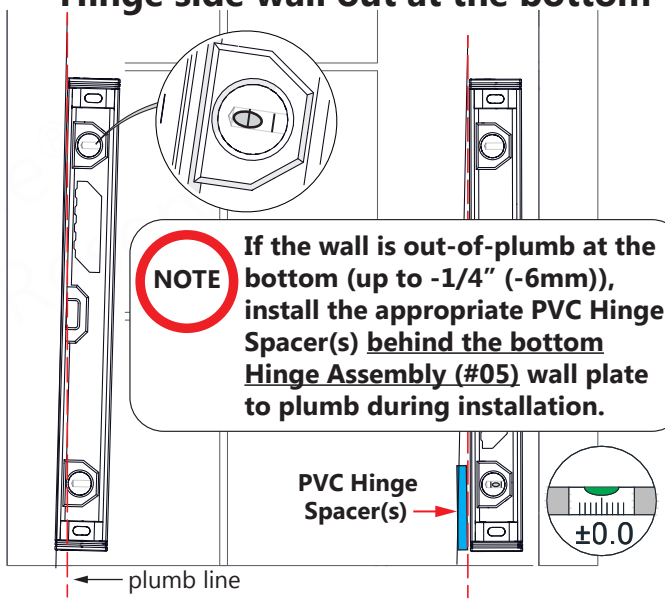

NOTE If the wall is out-of-plumb at the bottom (up to -1/4" (-6mm)), install the appropriate PVC Hinge Spacer(s) behind the bottom Hinge Assembly (#05) wall plate to plumb during installation.

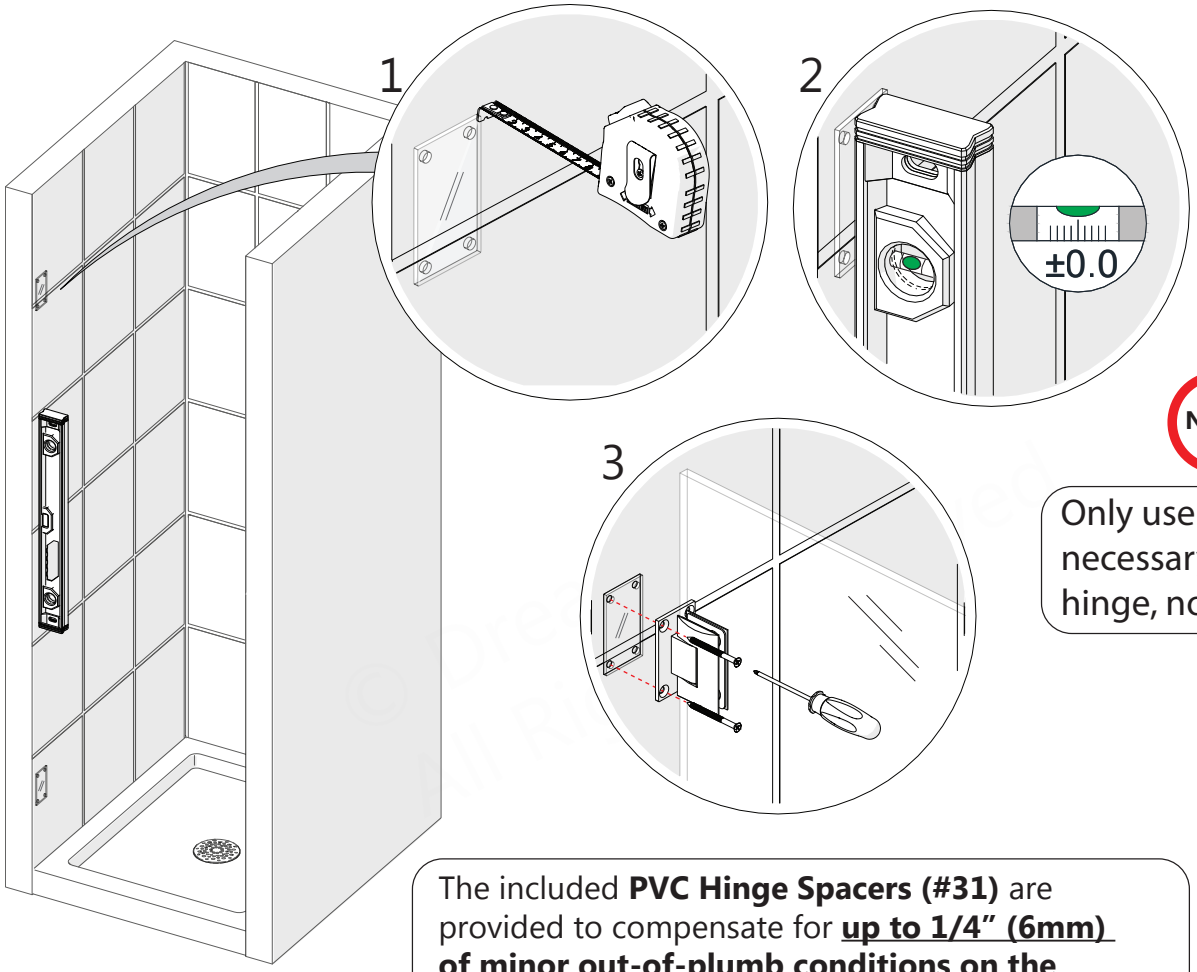

Fig 1a

NOTE Only use spacer(s) as necessary behind one hinge, not both.

The included **PVC Hinge Spacers (#31)** are provided to compensate for **up to 1/4" (6mm) of minor out-of-plumb conditions on the hinge-side wall.** Unnecessary use of the PVC Hinge Spacers could reduce the required opening size for the door glass.

Parts Needed

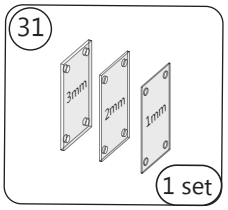

Tools Needed

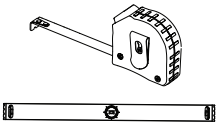

©2026 DreamLine® All Rights Reserved

©2026 DreamLine® All Rights Reserved

2

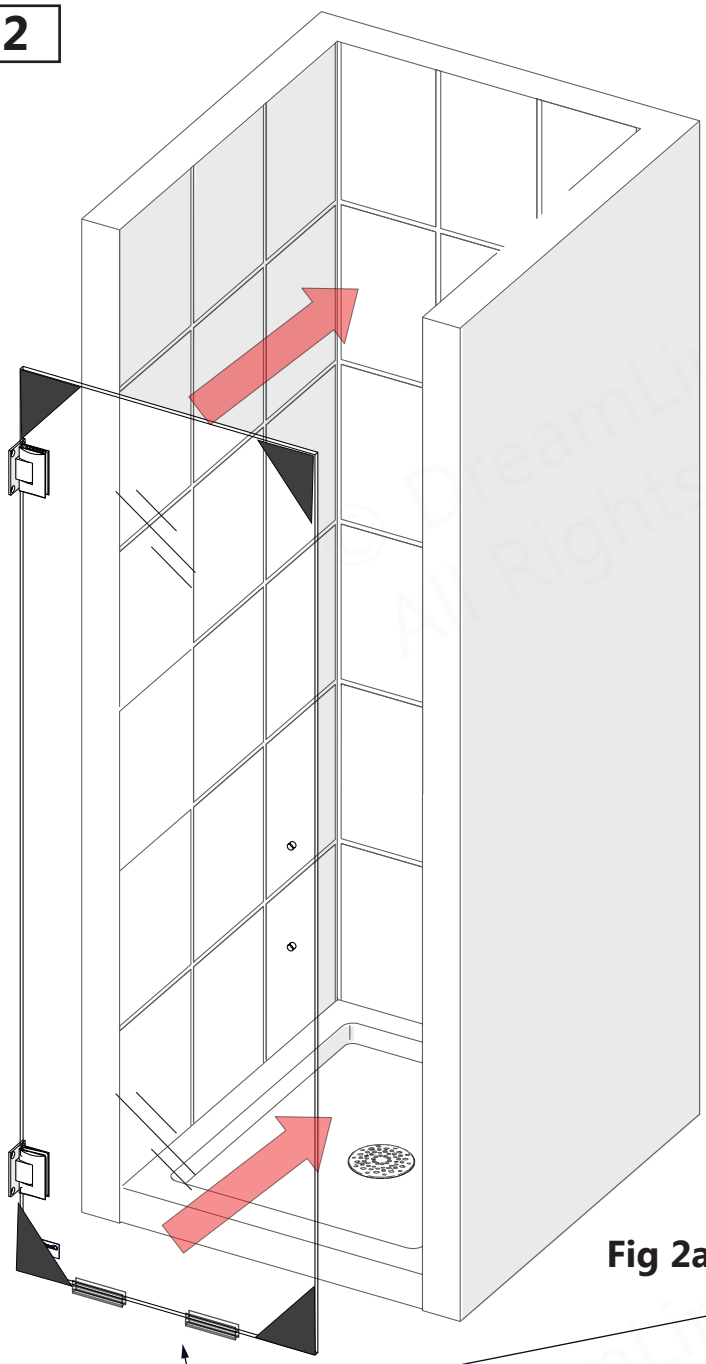

Fig 2a

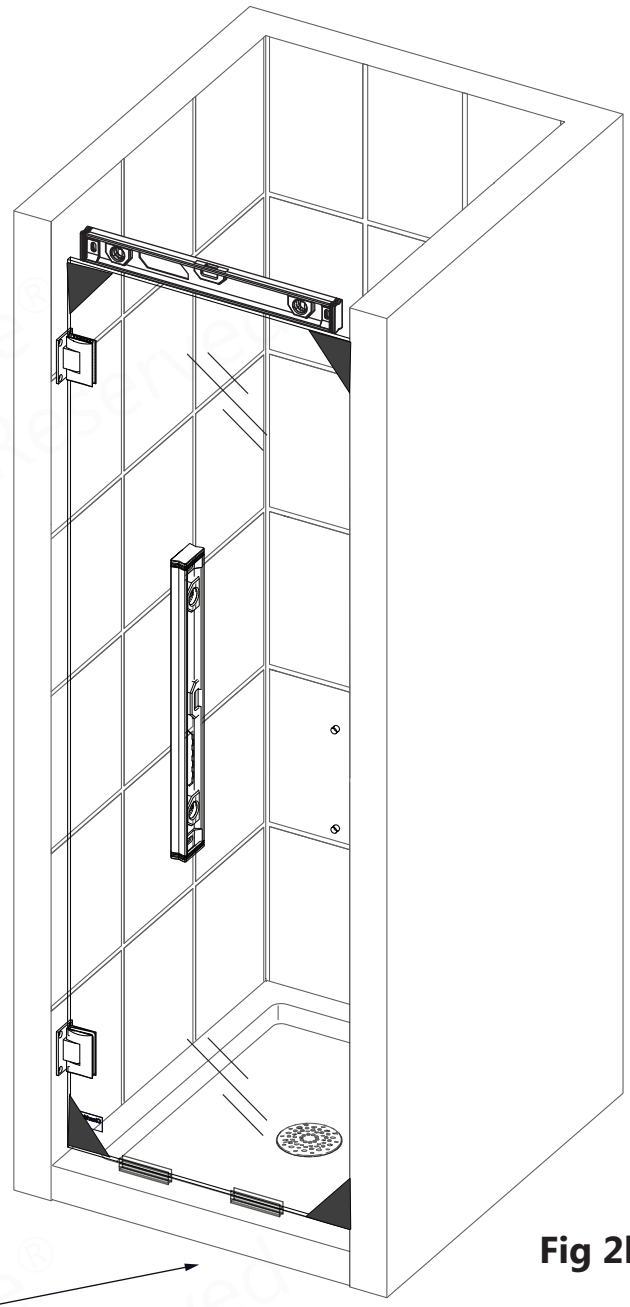

Fig 2b

left-swing installation shown

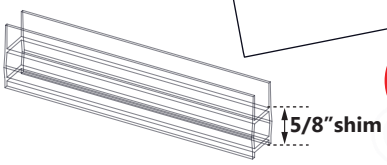

NOTE

Use the provided 5/8" (16mm) spacer shims when positioning the **Door Glass (#01)** to maintain the proper spacing between the bottom of the Door Glass and the threshold. Secure the spacers to the glass with tape if necessary. (5/8" (15.9 mm) wood or plastic shims may also be used on the threshold)

Check the **Door Glass (#01)** with a level to verify it is plumb BEFORE marking the **Hinge Assembly (#05)** positions on the wall.

TIP

Use the 72" (1829 mm) **L-Strike Vinyl (#08)** or **180° Inline Strike Vinyl (#19)** as a height reference to be sure that the installed Door Glass height will be 72" (1829 mm). This is especially important when installing the door along with an inline panel.

Tools Needed

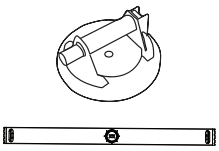

3

TIP

Cover the face of each hinge with tape and use an extension bit holder to avoid scratching the finished surface of the hinges.

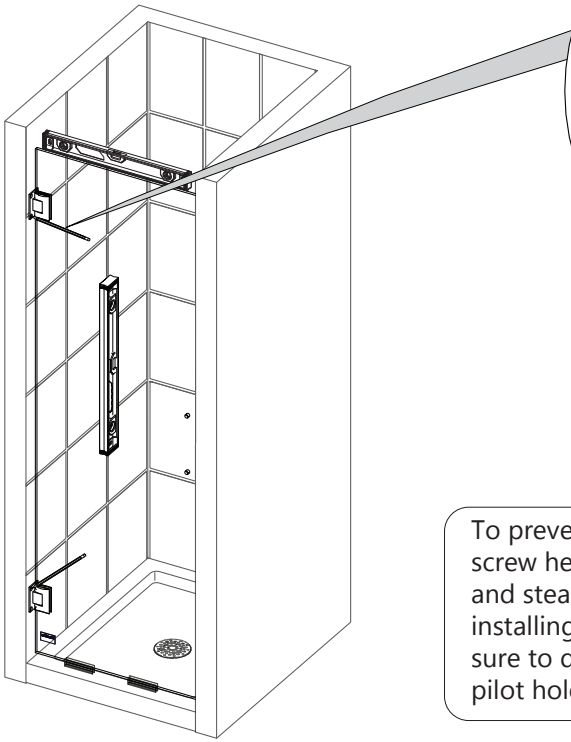

1

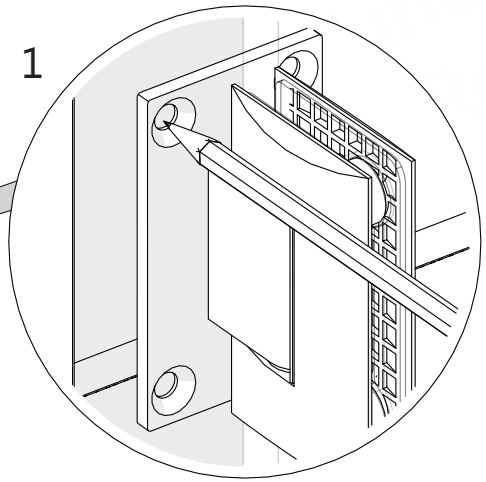

2

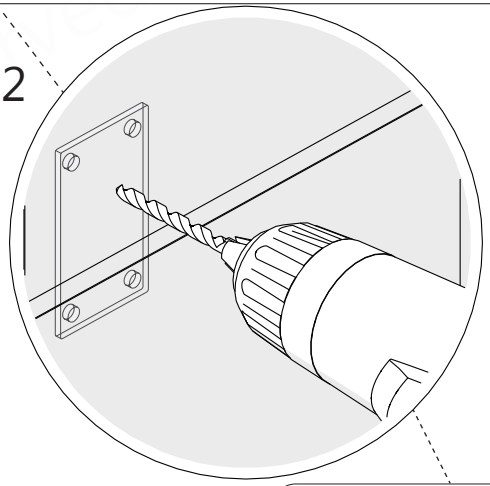

TIP

The **PVC Hinge Spacers (#31)** can be used as a template when marking the hinge mounting holes

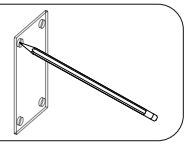

Use a diamond-tipped bit and low torque when drilling into porcelain or other hard tile surface. Follow the drill bit manufacturer's guidelines for proper use.

NOTE

TIP

To prevent stripping the screw heads, use low torque and steady pressure when installing the screws. Make sure to drill Ø1/8" (3mm) pilot holes into the studs.

3*

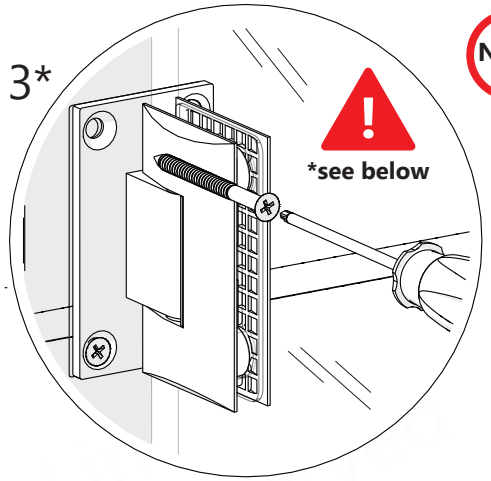

Fig 3

Parts Needed

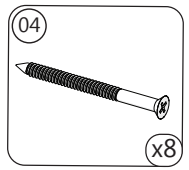

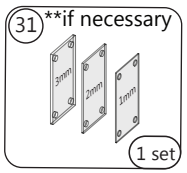

Tools Needed

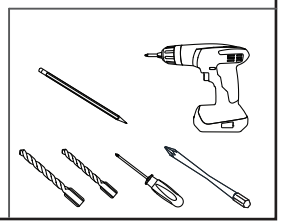

NOTE

For installation into a **stud** or other **wood reinforcement** behind the finished wall **(Required)**:

- drill a **Ø1/4"(6mm)** hole up to the stud, drill an **Ø1/8"(3mm)** pilot hole into the stud and use the **ST5.5 x 70mm Countersunk Screws (#04).**

***If Minor Out-of-Plumb Conditions were found in Step 1a:**

Use **PVC Hinge Spacer(s) (#31)** behind the **Hinge Assembly (#05)** before securing them to the wall with the **ST5.5×70mm Countersunk Screws (#04)**

©2026 DreamLine® All Rights Reserved

4

Hinge Blocking Procedure

NOTE

Be sure to use the thicker, **2mm** vinyl gaskets on each side of the hinges. Cut 3/8" squares from the extra 1mm gaskets and insert them in any gaps between the hinge body and the glass. Apply a medium-strength thread lock (not included) to the hinge bolts. Tighten the hinge bolts firmly using a screw gun and a **4mm hex bit** and cover the hinge bolts with the decorative covers. **Fig 4**

(Thread lock not included)

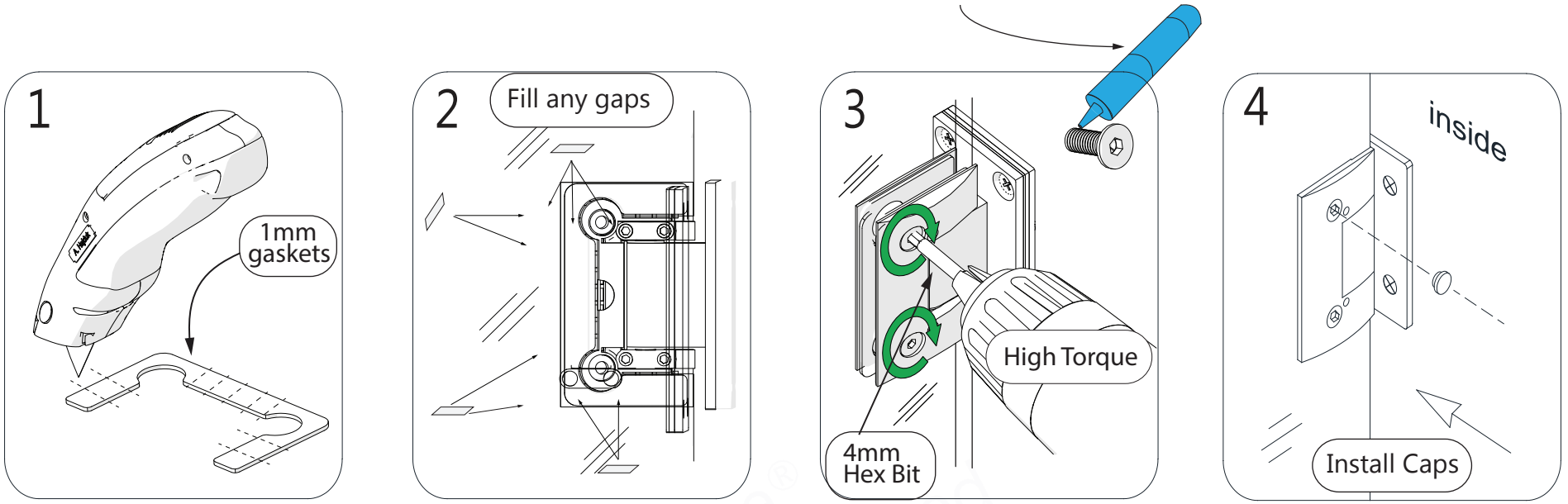

TIP

Be sure the Door Glass is Level and plumb before tightening. Keeping the glass edge flush with the inside edge of the hinge can be helpful in aligning th Door Glass. **Fig 4**

Tools Needed

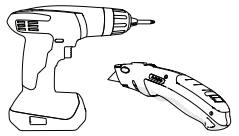

©2026 DreamLine® All Rights Reserved

Handle Assembly Installation

(handle style may vary by model)

5

Single-sided Handle

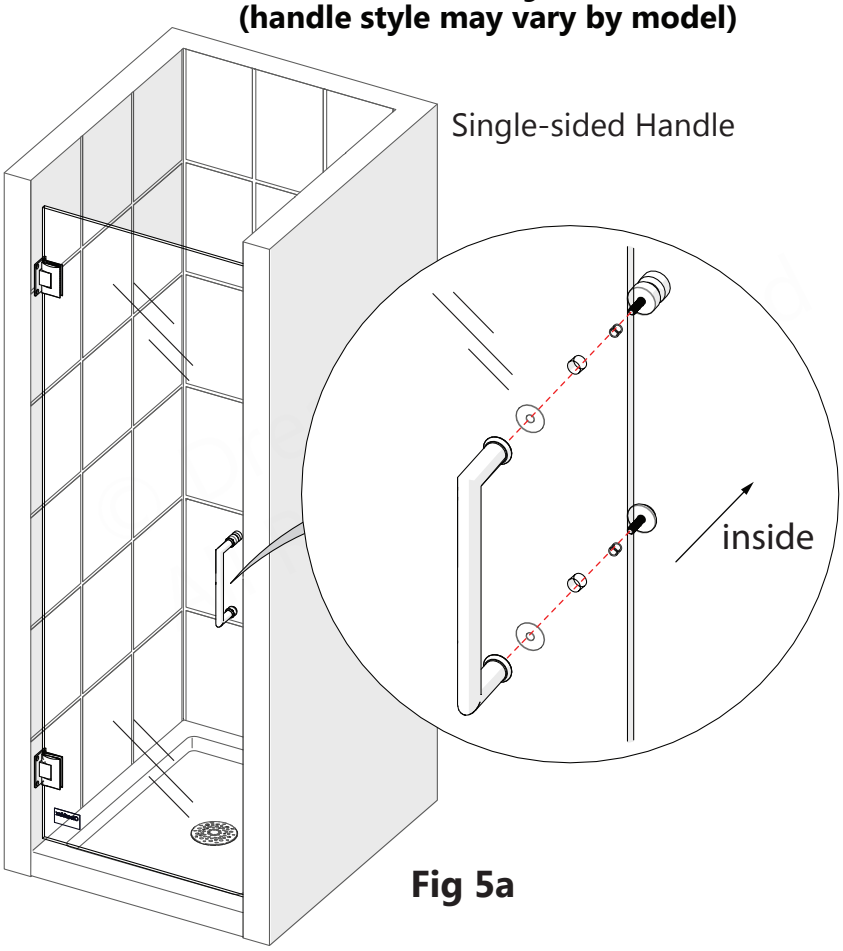

Fig 5a

Back-to-Back Handle

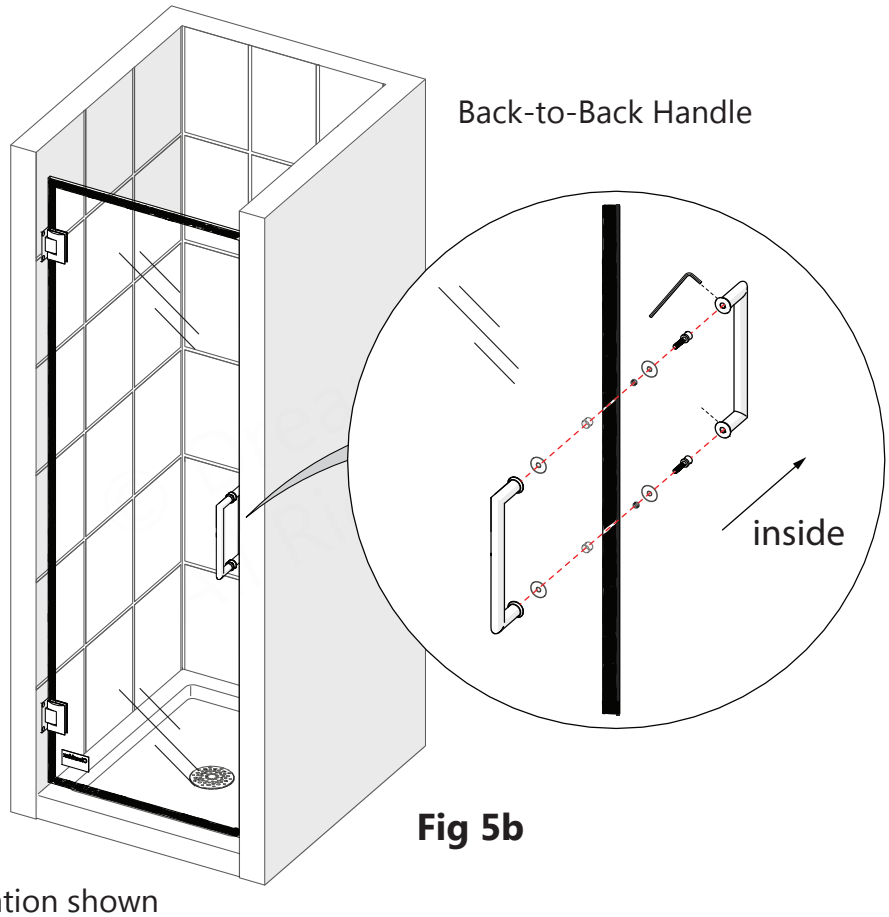

Fig 5b

left-swing installation shown

Parts Needed

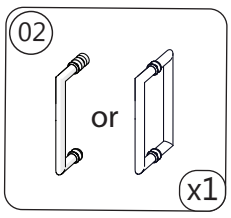

Tools Needed



©2026 DreamLine® All Rights Reserved

Sweep Vinyl Seal Installation

6

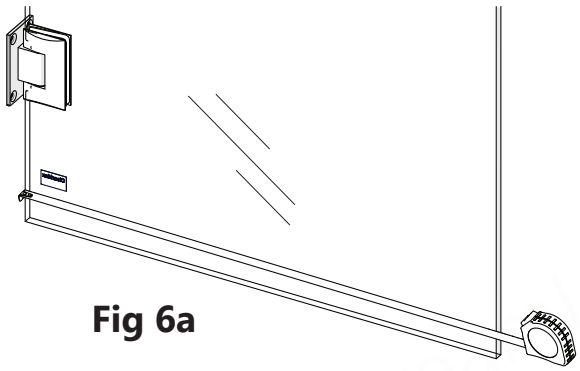

Fig 6a

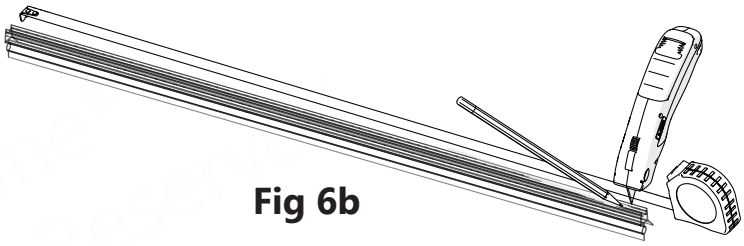

Fig 6b

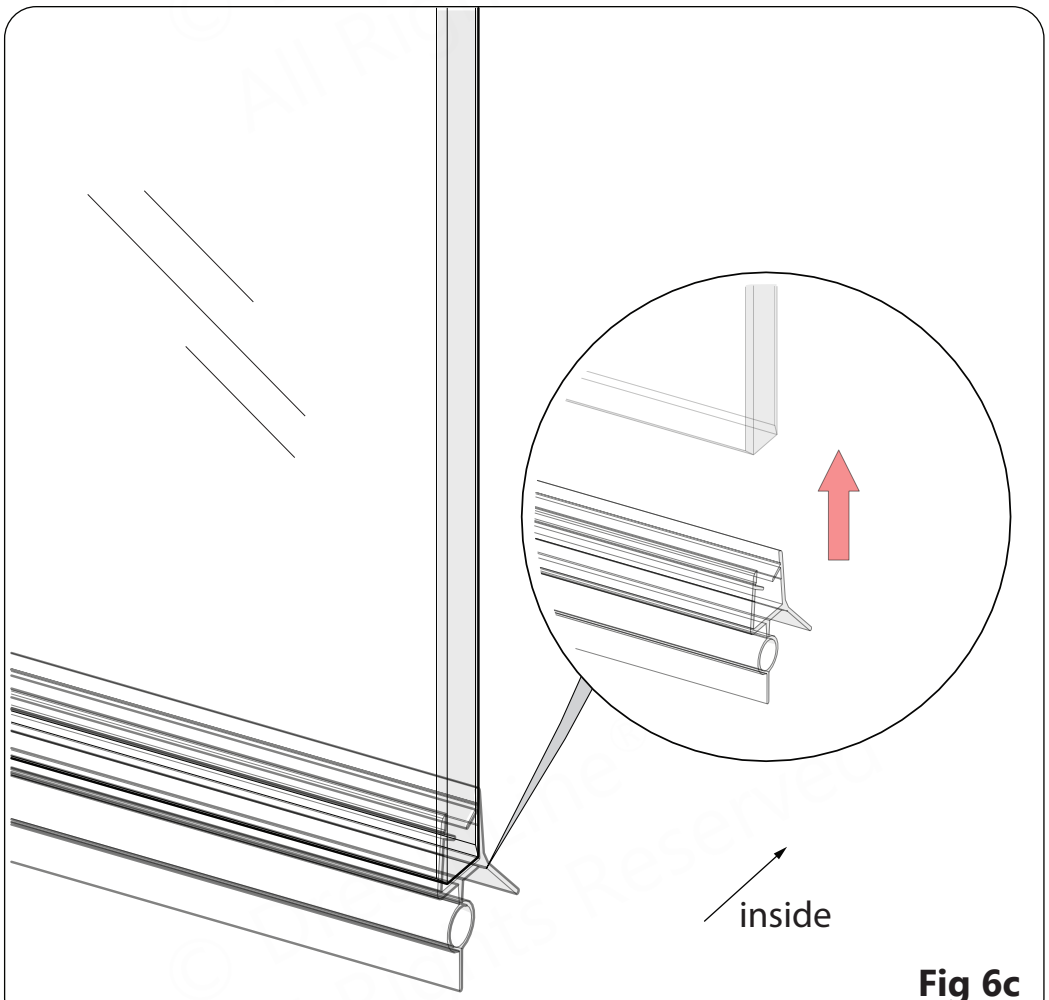

Fig 6c

Parts Needed

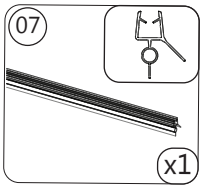

Tools Needed

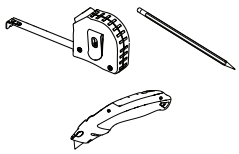

NOTE If necessary, cut the **Bottom Sweep Vinyl Seal (#07)** to match the width of the **Door Glass (#01)**.

NOTE Press the **Bottom Sweep Vinyl Seal (#07)** onto the bottom edge of the **Door Glass (#01)**.

©2026 DreamLine® All Rights Reserved

Hinge Side Vinyl Seal Installation

7a

NOTE

Cut the **Hinge Side Vinyl Seal (#06)** into three sections with a razor utility knife and notch according to the diagram on the next page to fit around the hinges and sweep vinyl to prevent leakage. **Fig 7a**

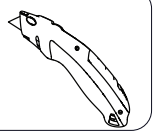

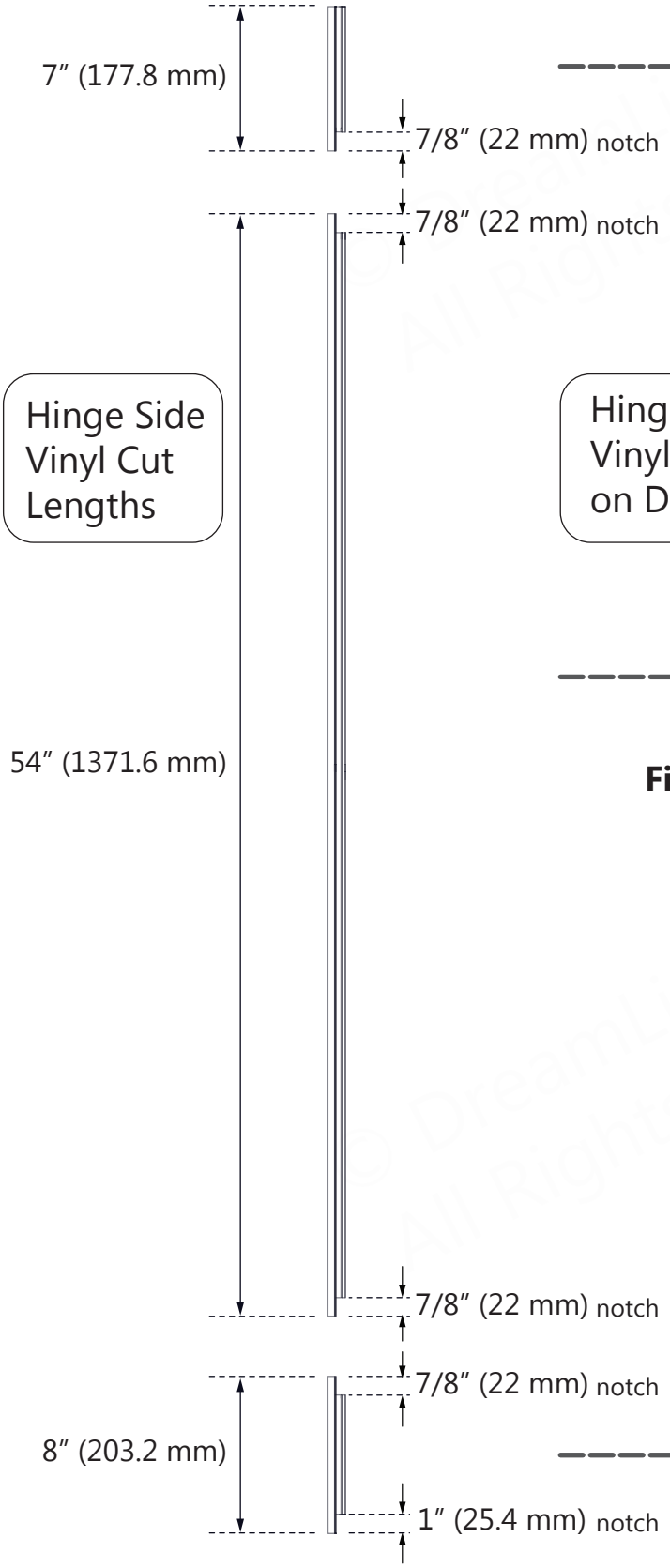

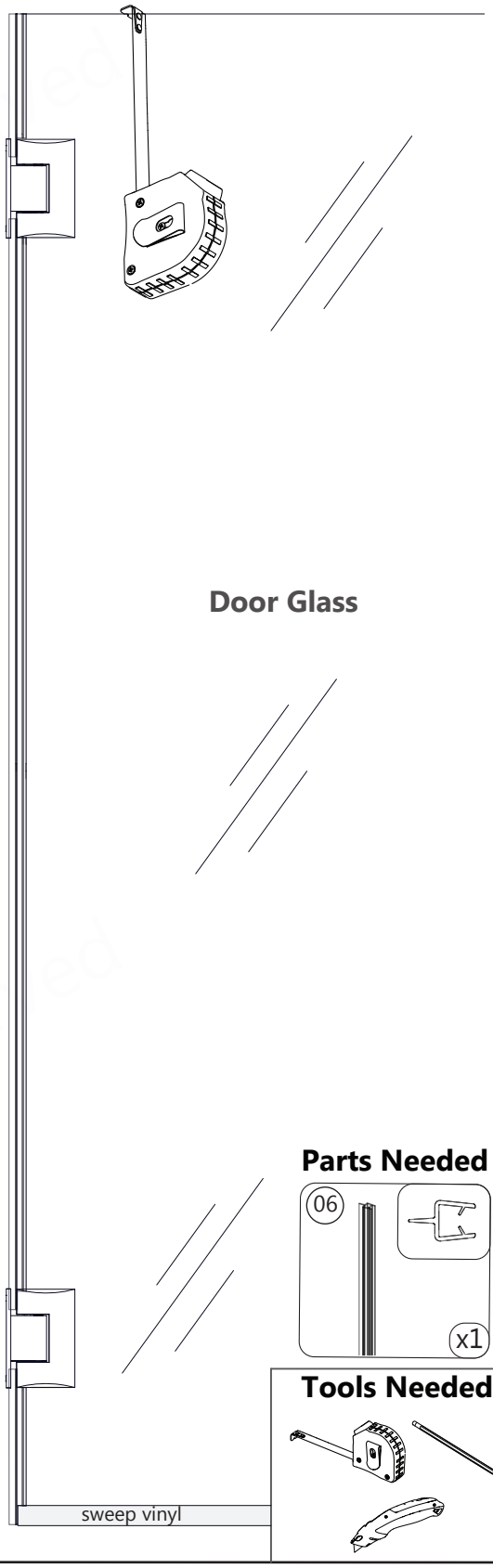

Fig 7a

Parts Needed

Tools Needed

©2026 DreamLine® All Rights Reserved

Hinge Side Vinyl Seal Installation

7b

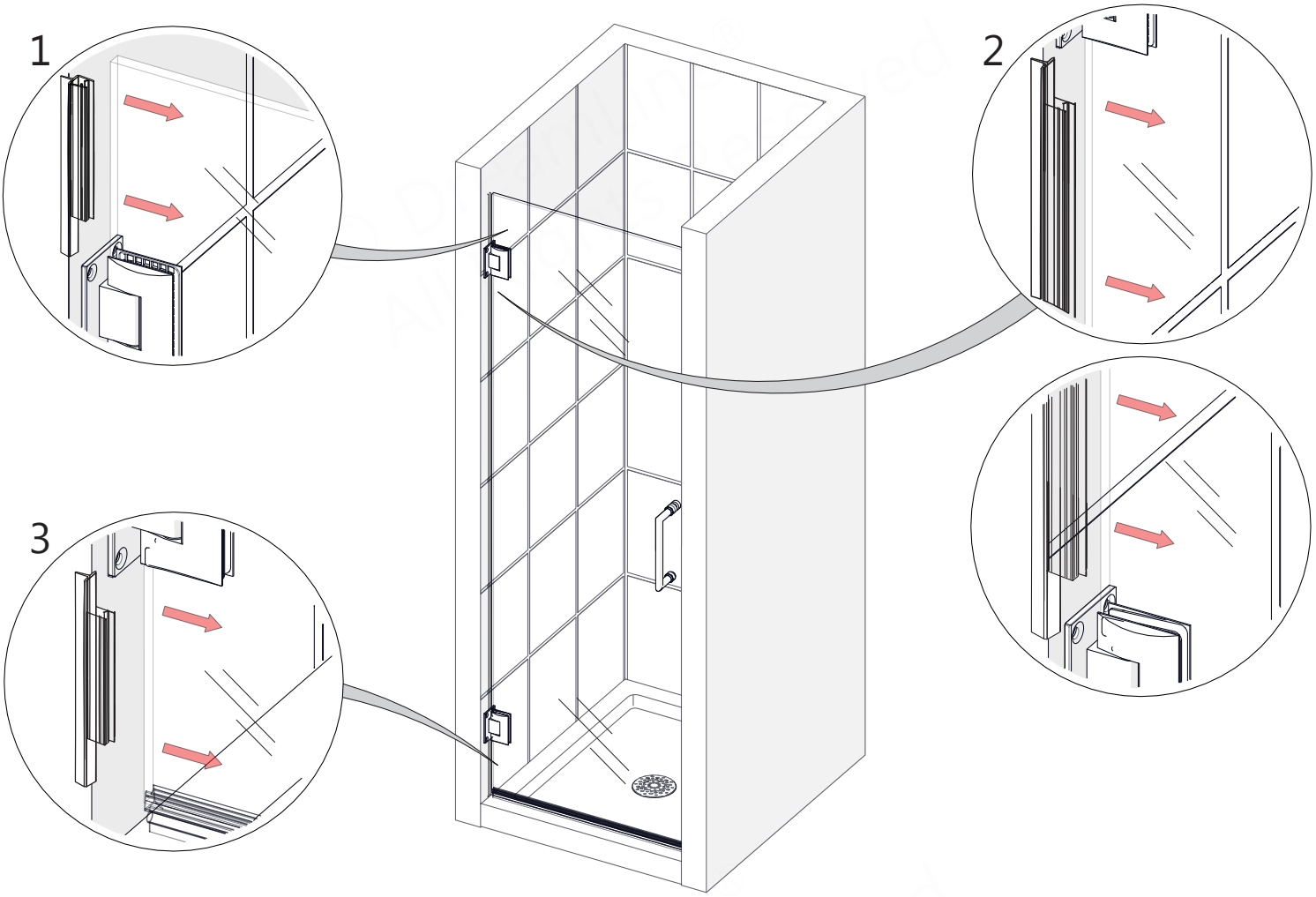

Fig 7b

left-swing installation shown



This completes the installation of the Door Glass.

- **For Single Shower Door installation, proceed to the next step.**
- **For models that include additional Panel Glass: Refer to the manual that is packaged with the Panel Glass to continue with the installation.**

©2026 DreamLine® All Rights Reserved

Hinge Assembly Adjustment

NOTE

The hinge assemblies are preset to overclose to 85° for a tight seal against the strike vinyl. The adjustment feature on the hinge assemblies is used to change the closing angle of the door only. It is NOT necessary, but may be desired by some. For single door models, make any adjustments to the hinges before installing the L-Strike vinyl w/VHB tape in **Step #8**.
Both the top and bottom Hinge Assemblies must be adjusted at the same time and to the same angle during adjustment.

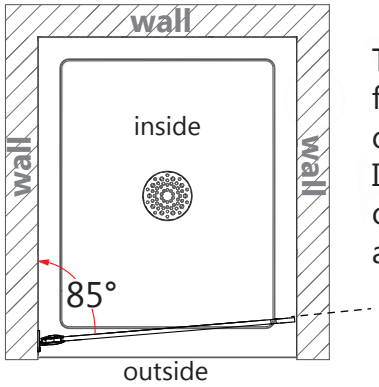

hinges adjusted to overclose before installing the strike vinyl seal

The Adjustable Hinge Assemblies are factory pre-set to overclose to 85° to create a tight seal with the Strike Vinyl. If strike vinyl is not used, the hinges can be adjusted to close to a different angle (90° for example).

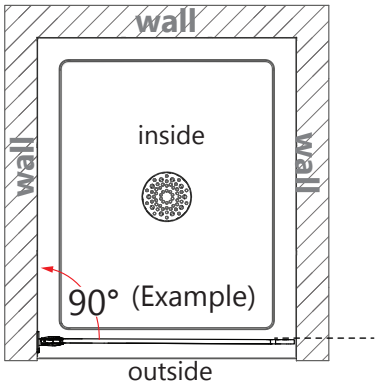

Overview of UNIDOOR left-swing installation shown

Adjusting the Hinge Assemblies

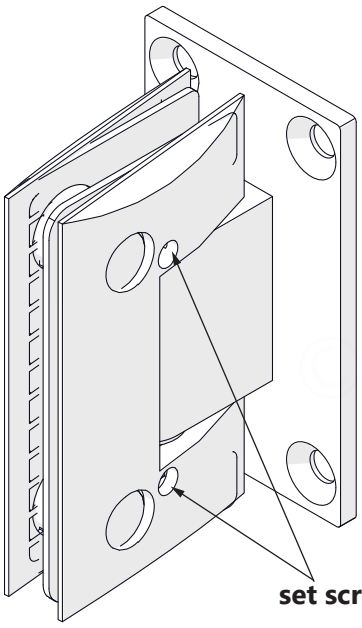

Once the **Door Glass (#01)** is installed:

- Hold the door in the closed position and loosen the adjustment set screws on **both** hinges with the supplied Allen Key
- Move the door to the new desired closed position
- While holding the door in the new closed position, retighten the set screws on **both** hinges
- The Door Glass will now close to the new closed position

Tools Needed



©2026 DreamLine® All Rights Reserved

8

L-Strike Vinyl Seal Installation
(for single shower door installation only)

NOTE

The surfaces need to be clean and free of debris before installing the L-Strike Vinyl Seal (#08)

Before attaching the **L-Strike Vinyl Seal (#08)** to the wall, make sure the **hinges** are set to overclose when in the closed position. Refer to **page 21** for more information on the adjustable **Hinge Assemblies (#05)**,.

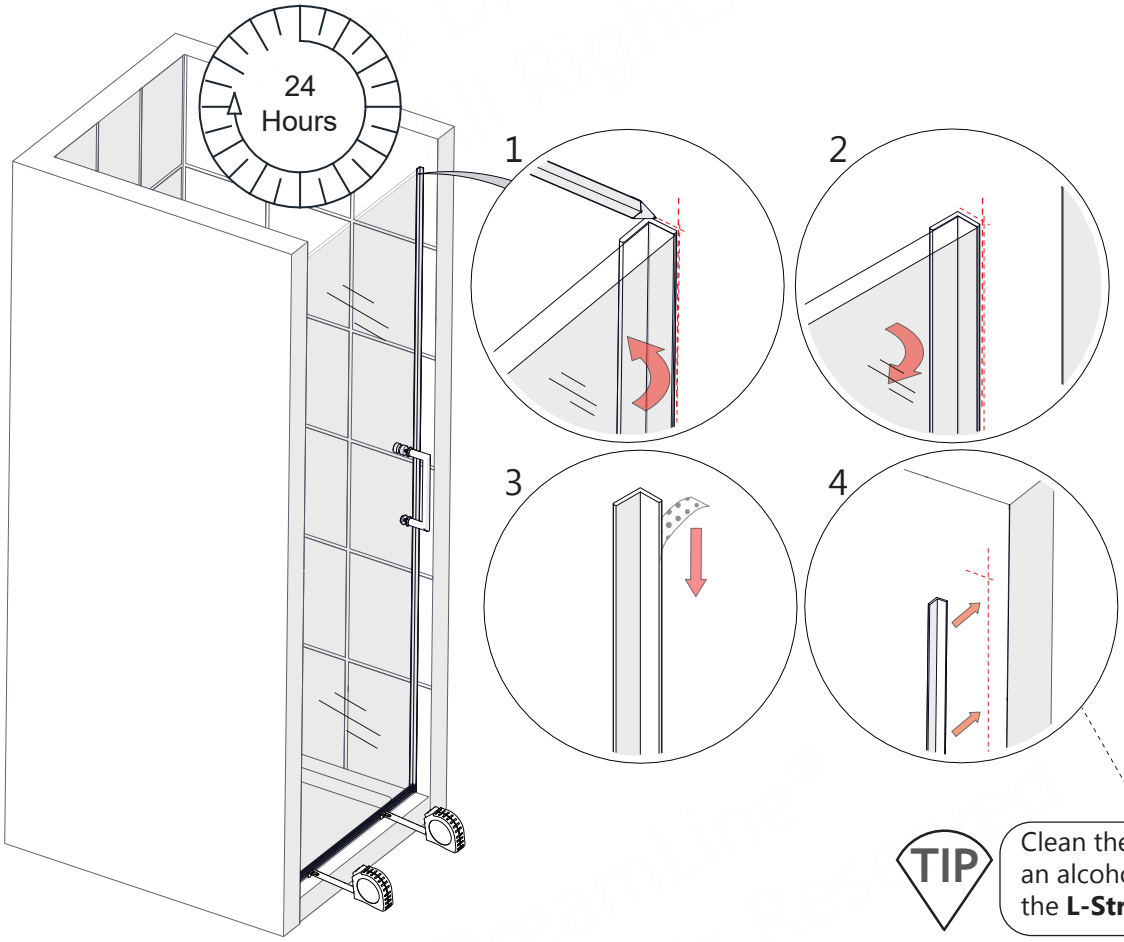

TIP

Clean the intended surface area with an alcohol swab prior to attaching the **L-Strike Vinyl (#08)** to the wall.

left-swing installation shown

NOTE

Hold the door in the closed position, parallel with the threshold, to mark the location of the **L-Strike Vinyl Seal (#08)**. The adhesive will work best if you **Allow 24 hours for the adhesive to fully set before use!**

Parts Needed

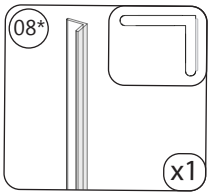

©2026 DreamLine® All Rights Reserved

Bottom Sweep Vinyl - Tip

TIP Notch the **Bottom Sweep Vinyl (#07)** on the inside where it overlaps the Strike Vinyl.

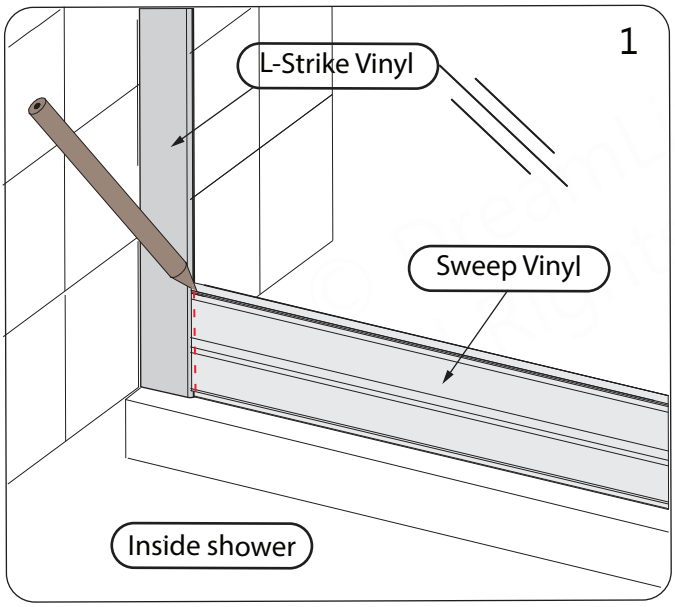

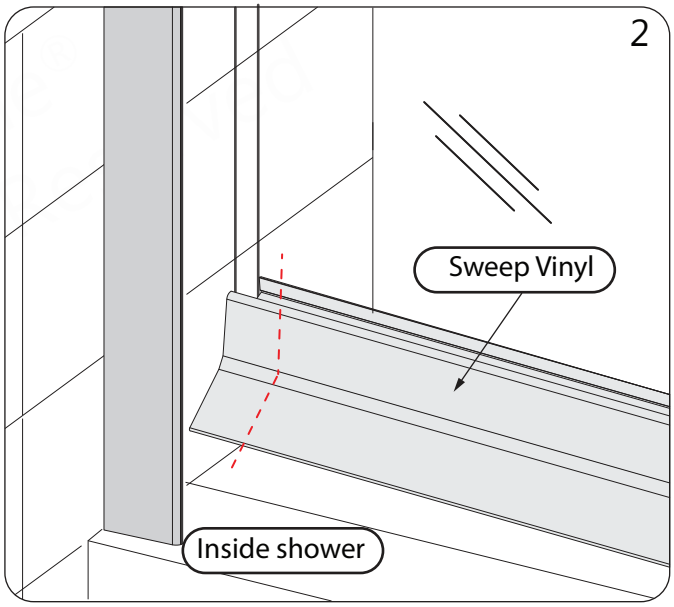

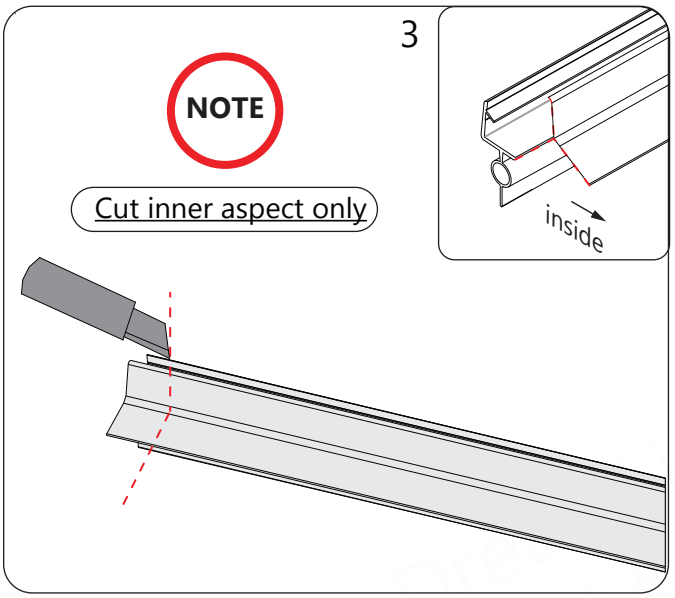

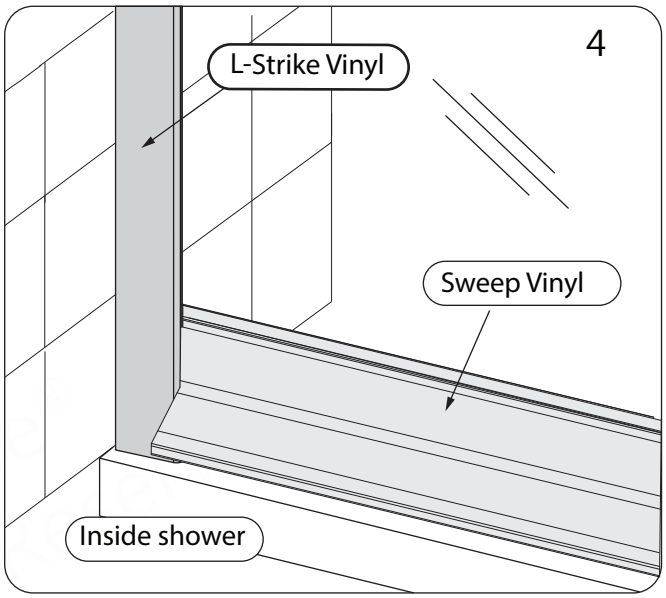

©2026 DreamLine® All Rights Reserved

Product Maintenance

BASES and BACKWALLS: To ensure long lasting life for your acrylic back walls: wipe them off after each use with a soft cloth. To clean the acrylic back walls use non-abrasive sprays or cream based cleaners. Avoid the use of aerosol spray cleaners. Never use abrasive cleansers, metal brushes or scrapers that could permanently scratch or dull the surface.

GLASS: To ensure long lasting life for your glass shower products: wipe them off after each use with a soft cloth. Rinse and wipe off the glass using either a soft cloth or a squeegee to prevent soap buildup and water spots (Hard water can etch the surface of the glass over time if left to dry). To prevent scratching the surface: never use abrasive cleaners or cleaning products that contain scouring agents. Never use bristle brushes or abrasive sponges that may scratch the surface of the glass.

HARDWARE: To ensure a long lasting finish: wipe off all metal parts after each use with a soft cloth. Do not use abrasive cleaners or cleaning products containing ammonia, bleach or acid. If accidentally used, rinse the surface as soon as possible to prevent damage to the finish (peeling or corrosion). After cleaning the polished finishes, rinse thoroughly and wipe dry with a soft clean-cloth. Clean stainless steel surfaces at least once a week. When applying stainless steel cleaner or polish to stainless steel hardware, work with the grain (not across the grain). Never use an abrasive sponge or cloth, steel wool or wired brush as these may permanently scratch the surfaces.

NOTE **To maximize the life of your door, it is important to regularly inspect the glass and other hardware for misalignment, proper attachment, and/or damage. Contact DreamLine® with any questions or concerns.**

UNIDOOR Series (STYLE A) / UNIDOOR EDGE Single Door Maintenance Checklist

☐ Check that the unit is stable, operates smoothly and that the installation is secure

☐ Confirm that all screws are tight

☐ Confirm that all vinyl seals are intact (replace if missing or damaged to prevent water leakage)

☐ Inspect exposed and concealed glass edges for damage

- ☐ **Damaged Glass Must be Replaced**

©2026 DreamLine® All Rights Reserved

Troubleshooting

Problem/Symptom	Suggested Solution
Missing Parts	•Check all shipping/packaging material for missing parts/components. •If not found, contact DreamLine Customer Support [1-866-731-2244] to order factory part replacement.
Door Glass (#01) feels loose in the hinges; the hinges are pulling out of the wall; Door glass is not level across the top; sweep vinyl drags; no clearance between the door glass and the strike vinyl	•Remove the vinyl seals (including the sweep vinyl) from the **Door Glass (#01)** and place two 5/8" shims under the door glass. Remove the backplates from the **Hinge Assemblies (#05)**. Remove the glass and set on a protective surface. Remove and clean the clear Hinge Assembly gaskets and the area around the hinge cutouts. Using an assistant, re-install glass using the 5/8" shims. Reinstall backplates and **fully tighten** the hinge bolts by hand. It is normal to hear the gaskets compress onto the glass. (Page 14). Reinstall the vinyl seals. •Confirm the hinge screws were installed into wood reinforcement in the wall during installation and are tight to the walls; if not, removal and reinstallation may be necessary. (Page 3)
Door Glass (#01) does not create a tight seal with the L-strike vinyl while in the closed position	•Use a level to confirm the **Door Glass (#01)** is plumb; Confirm the **L-Strike Vinyl (#08)** is installed in the correct location so the door glass creates a tight seal with the vinyl when in the closed position. Be sure the **Bottom Sweep Vinyl Seal (#07)** is correctly notched to fit around the **L-Strike Vinyl (#08)** [Page 35] •The **Door Glass (#01)** may need adjustment to reset the **Hinge Assemblies (#05)** for overclose to achieve a seal, refer to the Hinge Assembly Adjustment Procedure [Page 21]
Water Leakage: **Hinge Assembly (#05)**	•Confirm the vinyls are notched as instructed and tightly secured to the **Door Glass (#01)**. [Pages 19; 20] •Direct the water flow away from the area
Water Leakage: **Bottom Sweep Vinyl Seal (#07)**	•Confirm the vinyl is tightly secured to the bottom of the **Door Glass (#01)**. Also, confirm the distance between the bottom of the Door Glass and threshold is 5/8" (16mm). Confirm the **Bottom Sweep Vinyl Seal (#07)** is correctly notched around the **L-Strike Vinyl (#08)** •Direct the water flow away from the area
Handle (#02) rattles during operation	•Confirm the vinyl gaskets are present and the handles are tightly secured to the glass. If applicable, hand tighten the set screws with an allen key. [Page 17]



Prior to contacting DreamLine® Customer Service, please have the following information readily available:

- Purchase Order Information
  - Name, PO Number, Dealer/Vendor Name, etc.
- SKU/Model Number (see Pages 26-27)
- Factory Part Information (see Pages 26-27)

©2026 DreamLine® All Rights Reserved

Factory Parts Information

UNIDOOR -(PLUS/-X/-LS) (STYLE A) - HARDWARE		FACTORY PARTS INFORMATION	
ITEM #	**FACTORY PART NUMBER**	**ITEM DESCRIPTION**	**QTY**
02	0722**1**041 / 0722**4**041 / 0722**6**041 / 0722**9**041	Single-Sided 8in. Tubular Handle Assembly with Knob for 10mm (3/8in) Glass*	1 pc
02	0722**1**086 / 0722**4**086 / 0722**6**086 / 0722**9**086	Back-to-Back 8in. Tubular Handle Assembly for 10mm (3/8in) Glass**	1 pc
04	092130	ST5.5 x 70 Countersunk Screw	11 pcs
05	0741**1**027 / 0741**4**027 / 0741**6**027 / 0741**9**027	Paris 85-Degree Glass-to-Wall Adj Hinge Assembly for 10mm (3/8in) Glass	2 pcs
05a	0755**1**097 / 0755**4**097 / 0755**6**097 / 0755**9**097	Decorative Cap for M6 Hex bolt	8 pcs
06	063011100-1829	Hinge Side Vinyl Seal for 10mm (3/8in) Glass	1 pc
08	063009000-1829	L-Strike Vinyl w/VHB Tape	1 pc
	BOLD digit indicates finish:	*standard Handle for Unidoor, Unidoor Plus and Unidsoor-X	
	1 = Chrome; **4** = Brushed Nickel;	**standard Handle for Unidoor-LS and Unidoor Edge	
	6 = Oil Rubbed Bronze; **9** = Satin Black		

UNIDOOR - (PLUS/-X/-LS) (STYLE A) - GLASS		FACTORY PARTS INFORMATION	
ITEM #	**FACTORY PART NUMBER**	**ITEM DESCRIPTION**	**QTY**
01	010137001	23-in Door Glass	1 pc
07	063015100-0569	Bottom Sweep Vinyl for 10mm (3/8in) Glass (for 23-in Door Glass)	1 pc
01	010137002	24-in Door Glass	1 pc
07	063015100-0595	Bottom Sweep Vinyl for 10mm (3/8in) Glass (for 24-in Door Glass)	1 pc
01	010137003	25-in Door Glass	1 pc
07	063015100-0620	Bottom Sweep Vinyl for 10mm (3/8in) Glass (for 25-in Door Glass)	1 pc
01	010137004	26-in Door Glass	1 pc
07	063015100-0645	Bottom Sweep Vinyl for 10mm (3/8in) Glass (for 26-in Door Glass)	1 pc
01	010137005	27-in Door Glass	1 pc
07	063015100-0670	Bottom Sweep Vinyl for 10mm (3/8in) Glass (for 27-in Door Glass)	1 pc
01	010137006	28-in Door Glass	1 pc
07	063015100-0695	Bottom Sweep Vinyl for 10mm (3/8in) Glass (for 28-in Door Glass)	1 pc
01	010137007	29-in Door Glass	1 pc
07	063015100-0720	Bottom Sweep Vinyl for 10mm (3/8in) Glass (for 29-in Door Glass)	1 pc
01	010137008	30-in Door Glass	1 pc
07	063015100-0747	Bottom Sweep Vinyl for 10mm (3/8in) Glass (for 30-in Door Glass)	1 pc

Model #s:
SHDR-20237210F-##; SHDR-20247210F-##; SHDR-20257210F-##; SHDR-20267210F-##;
SHDR-20277210F-##; SHDR-20287210F-##; SHDR-20297210F-##; SHDR-20307210F-##

Contact **Support@DreamLine.com** for Part replacement, installation assistance or additional information.
Complete **Warranty** information is available on **DreamLine.com**.

©2026 DreamLine® All Rights Reserved

Factory Parts Information

UNIDOOR EDGE (SHDR-202472E-09)		FACTORY PARTS INFORMATION	
ITEM #	**FACTORY PART NUMBER**	**ITEM DESCRIPTION**	**QTY**
01	010013085	Door Glass	1 pc
02	0722**9**086	Back-to-Back 8in. Tubular Handle Assembly for 10mm (3/8in) Glass	1 pc
04	092131	ST5.5 x 70 Countersunk Screw (Satin Black)	11 pcs
05	0741**9**027	Paris 85-Degree Glass-to-Wall Adj Hinge Assembly for 10mm (3/8in) Glass	2 pcs
05a	0755**9**097	Decorative Cap for M6 Hex bolt	8 pcs
06	063011102-1829	Hinge Side Vinyl Seal for 10mm (3/8in) Glass (Satin Black)	1 pc
07	063009000-1829	L-Strike Vinyl w/VHB Tape (Clear)	1 pc
11	063015102-0595	Bottom Sweep Vinyl for 10mm (3/8in) Glass (for 24-in Door) (Satin Black)	1 pc
19**	063010102-1829	180˚ Strike Vinyl **item 19 ships with the UNIDOOR EDGE door glass and is not used for single door installation	—

**item 19 ships with the UNIDOOR EDGE door glass and is not used for single door installation

© DreamLine®
All rights Reserved

Contact **Support@DreamLine.com** for Part replacement, installation assistance or additional information.
Complete **Warranty** information is available on **DreamLine.com**.

©2026 DreamLine® All Rights Reserved

Factory Parts Information

UNIDOOR TOULON		FACTORY PARTS INFORMATION	
ITEM #	**FACTORY PART NUMBER**	**ITEM DESCRIPTION**	**QTY**
01a	010137126	Door Glass 28" Model	1 pc
01b	010137188	Door Glass 30" Model	1 pc
01c	010137144	Door Glass 24" Model	1 pc
02	07229041	Square Handle with Knob Handle Assembly	1 pc
04	092131	ST5.5x70mm Countersunk Screw	11 pcs
05	07419027	Paris 85 Degree Glass-to-Wall Adj Hinge Assembly	2 pcs
06	063011102-1829	Hinge Side Vinyl Seal	1 pc
07	063009000-1829	L-Strike Vinyl w/VHB Tape for 10mm (3/8in) Glass	1 pc
11b	063015102-0747	Bottom Sweep Vinyl Seal	1 pc
11a	063015102-0700	Bottom Sweep Vinyl Seal	1 pc
11c	063015102-0595	Bottom Sweep Vinyl Seal	1 pc
19	063010102-1829	180 degree Inline Strike Vinyl for 10mm (3/8in) Glass	1 pc

**item 19 ships with the UNIDOOR TOULON door glass and is not used for single door installation

© DreamLine® All rights Reserved

Contact **Support@DreamLine.com** for Part replacement, installation assistance or additional information.
Complete **Warranty** information is available on **DreamLine.com**.

©2026 DreamLine® All Rights Reserved

NOTES:

© DreamLine®
All Rights Reserved

© DreamLine®
All Rights Reserved

©2026 DreamLine® All Rights Reserved

© DreamLine®
All Rights Reserved

DREAMLINE®
dream in style

© DreamLine®
All Rights Reserved

TEL: 866-731-2244
FAX: 866-857-3638
DREAMLINE.COM

For more information on DreamLine® Shower Doors and Enclosures please visit **DreamLine.com**

©2026 DreamLine® All Rights Reserved

DREAMLINE®
dream in style

Install the door first

UNIDOOR PLUS (STYLE I)

SHOWER ENCLOSURE PANEL INSTALLATION INSTRUCTIONS

PLEASE REVIEW THIS ENTIRE MANUAL PRIOR TO INSTALLATION

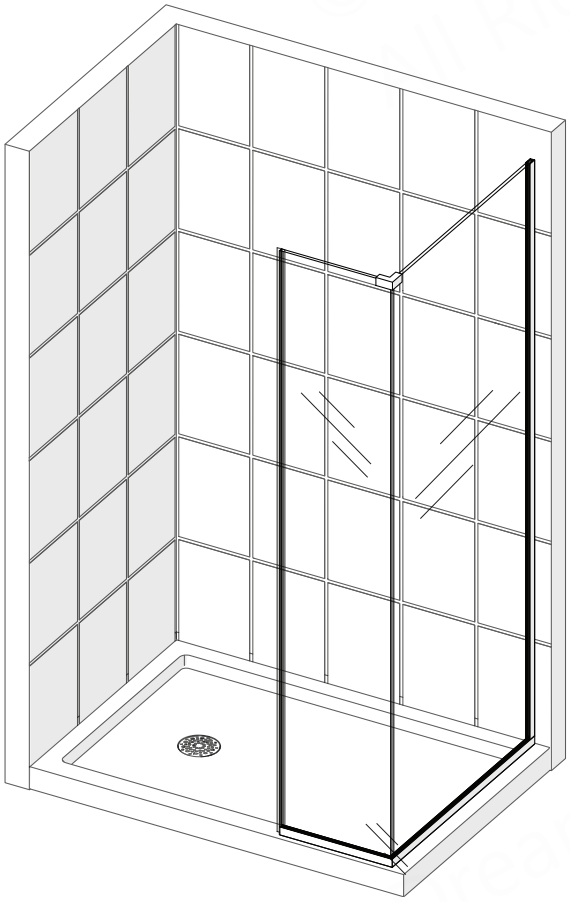

right-hand enclosure panel installation shown

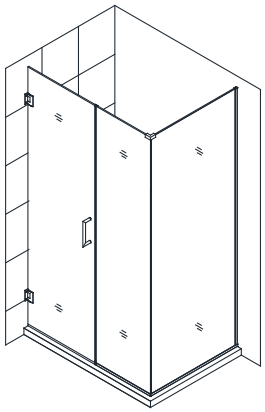

UNIDOOR PLUS STYLE I

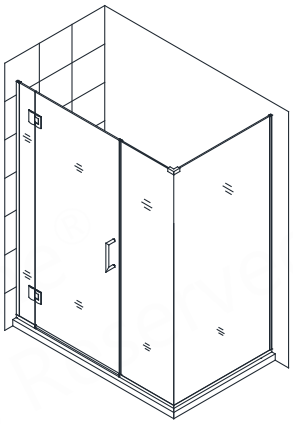

Style M3⁶

UNIDOOR-X

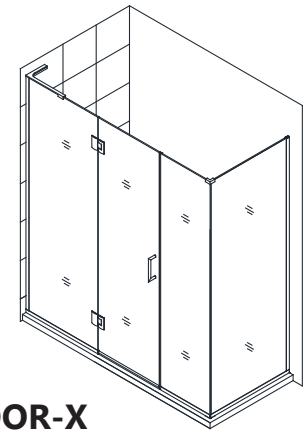

Style M3²⁴

IMPORTANT!
DreamLine® reserves the right to alter, modify or redesign products at any time without prior notice for the purpose of product improvement and customer experience. Please refer to the model's web page on **DreamLine.com** for the latest technical drawings, installation manuals, warranty information or additional product details.

Do Not Return Product to the Store. Contact DreamLine® with any questions

Questions?

Please Call ***DreamLine*** *Customer Support:* **1-866-731-2244**
Hours of Operation M-F 8AM - 6PM EST

Support@DreamLine.com

©2020 DreamLine® All Rights Reserved

©2020 DreamLine® All Rights Reserved

DREAMLINE®
dream in style

CLEARMAX®

This model is treated with DreamLine's exclusive ClearMax™ Glass technology. This is a specially formulated coating that prevents the build up of soap and water spots.

Install the surface with the ClearMax™ label towards the inside of the shower. Please note that depending on the model, the glass may be coated on either one or both surfaces.

For best results, squeegee the glass after each use and dry with a soft cloth.

Record the following purchase information for your records or in the event you need to contact DreamLine®:

Purchase Order Number _____

Installation Date _____

Installed By: _____

Store/Vendor Purchased From _____

OD Number (optional) _____
located on the shipping box or label if available.

SKU Number _____

Table of Contents

Section Title	Page #
ClearMax® Coating Information	—
Warnings and General Preparation	2
Model Specific Preparation	3
Shower Enclosure Plan	4
Shower Enclosure Overview	5-7
Tools	8
Detailed Diagram of Shower Enclosure Components	9
Parts List	10
Installation Steps	11-27
90° Degree Top Corner Bracket Installation	25
180° Degree Strike Vinyl Seal Installation	27
Product Maintenance	28
Troubleshooting	29
Factory Parts Information	30
Product SKUs	31-32

Symbol Legend

TIP **TIP** - for ease of installation.

CORRECT - recommended.

NOTE **NOTE** - take note of special feature; additional information.

INCORRECT - not recommended.

REQUIRED - requires special attention; signifies a warning.

Average Installation Time

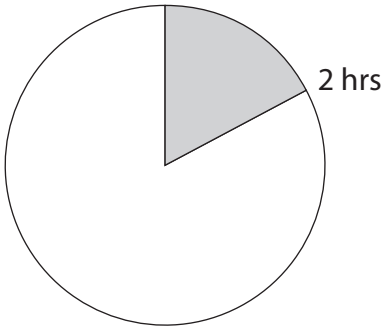

©2020 DreamLine® All Rights Reserved

©2020 DreamLine® All Rights Reserved

IMPORTANT

- DreamLine® reserves the right to alter, modify or redesign products any time without prior notice for product improvement and customer experience. Please refer to the model's web page on **DreamLine.com** for the latest technical drawings, installation manuals, warranty information or additional product details.
- This product should be installed by someone familiar with the construction requirements for this type of project and the care necessary for the safe installation and operation of the product.
- The safety of any installation is the responsibility of the installer.
- Professional installation recommended. *(All Models)*
- Professional installation required. *(Enigma Series)*
- To prevent damage or serious injury, Do Not lean against the installed panel/door/glass.
- To prevent damage or serious injury: Do Not attempt to lift or move a heavy lite of glass alone. Use an assistant and/or a professional grade glass suction cup.
- The installation of some models may require drilling down into the threshold. Contact the manufacturer of the base, tub, or threshold material with any questions regarding the drilling of holes into their product.
- All drawings in this installation manual are for illustrative purposes only and are not drawn to scale.

TEMPERED GLASS WARNING

- Your Shower Door Glass Could Shatter Without Warning if Improperly Installed or Mishandled
- Do Not install or operate a shower door if the glass has chipped corners, slivered edges or is otherwise damaged and/or has been dropped or banged into a hard surface such as tile, marble or glass.
- **The main causes of tempered glass breakage are:**
  - Improper handling, storage or installation
  - Misuse/abuse
  - Lack of maintenance
  - Failure to replace damaged glass
  - **Improper handling during storage, unpacking and installation:**
  - Corners and edges are the most susceptible area to damage on a lite of tempered glass and should be protected and handled with care during storage, unpacking, installation and operation. A concentrated point of pressure or impact with a surface harder than itself may cause the tempered glass to shatter. The tempered glass may release immediately, within several hours or even days later.
  - **Incorrect installation of door hardware, rollers, hinges, channels, stopper or glass:**
  - Improper installation may include: loose hardware and/or lack of proper gaskets between the hardware and glass. Additionally, improper alignment of guide rails, wall profiles or other hardware during installation or operation may place stress on the glass edges and cause it to break.
  - This product must be installed by a professional and experienced installer familiar with the safe handling of tempered glass.
  - **Improper use of this product:**
    - Aggressively opening or closing the door may cause trauma to the glass, which can lead to breakage. This may occur immediately or hours or even days later.
    - **The shower door hardware and glass should be inspected periodically:**
      - Instruct the homeowner how to perform a periodic inspection of the shower hardware and glass - some minor adjustments may be necessary based upon the use (or misuse) of the shower door. Ensure that the hardware remains tight and that the door alignment and operation are correct. Any adjustments should be made upon discovery to prevent damage to the product.
      - Additional considerations should be given to the installation of frameless tempered glass products in households with young children or an elderly person due to an increased chance of improper handling. In such cases, alternatives such as shower curtains or grab bars should be considered.

GENERAL PREPARATION

- After opening all boxes and packages, read this introduction carefully. Check that all the items are included in the package by marking off the components on the **"Detailed Diagram of Product Components"** page. Examine all boxes and packages for shipping damage. If the unit has been damaged, has a finishing defect, or is missing parts; please contact our Customer Support department within 3 business days of the delivery date. **Please note that DreamLine® will not replace any damaged products or missing parts free of charge after 3 business days or if the product has been installed.** Please contact DreamLine® if you have any questions.
- **Please note that you should refer to your local building codes with questions on installation compliance standards. Building and plumbing codes may vary by location, and DreamLine® is not responsible for code compliance standards for your project and will not accept any returns.**
- If this unit is going to be installed in a new construction, install all the required plumbing and drainage before installing the shower. **Use a competent and licensed (if required by local code) plumber for all plumbing installation.**
- Make sure that prior to beginning the installation, the surfaces are leveled and solid and will be able to support the total weight of the unit. Also make sure the walls are at right angles. Irregular installation surface level, radius corners or improper angle of side walls will result in serious problems for your installation. Please note that some adjustments and drilling will be necessary during the installation process.
- Protect all primary surfaces of the product during installation. Never set your glass down directly onto a tile floor. Leave corner protectors in place until it is necessary to remove them. Always use a piece of wood or cardboard to protect the bottom edge and corners of the glass prior to and during installation.
- This unit must be installed upon a finished threshold and against finished walls.
- *DreamLine® shower doors are not designed to be installed into a fiberglass surround due to the radius corners and lack of a solid surface to mount the hardware.*

WARNING: TO AVOID THE RISK OF DAMAGE OR INJURY:

- **Follow all recommendations and requirements as shown in the installation instructions.**
- Perform a thorough inspection of the glass and all parts for any damage prior to installation. Any damage to tempered glass can cause breakage.
  Do Not install damaged glass!
- Do Not install or operate a shower or tub door if the glass has chipped corners, slivered edges or is otherwise damaged. Do Not install or operate a shower or tub door that has been dropped or banged into a hard surface such as tile, marble or glass.
- **CAUTION:** Contact with any hard surface can damage tempered glass and cause it to shatter.
- This product uses tempered glass. Glass cannot be cut after it has been tempered.
  Do Not attempt to cut tempered glass.
- DreamLine® Glass Shower doors, Tub doors, Inline panels, and Return panels can shatter due to improper handling or lack of maintenance. Conduct periodic inspections of glass and all parts for possible damage, missing or loose parts.
- Always wear proper safety equipment such as: safety goggles, work gloves and appropriate footwear during the installation process.
- **WARNING. Risk of leakage and/or damage.** Follow all instructions regarding the application of silicone sealant or caulk. Allow 24 hours for the sealant to cure before the initial use of the shower or tub product. Follow the silicone manufacturer's recommendations regarding the use of their product.

- **Thoroughly read these instructions before installing or using this product.**
- **Leave this manual for the end-user of the product.**



This product should be installed by someone familiar with the construction requirements for this type of product and the care necessary for the safe installation and operation of the product.

Model Specific Preparation

REQUIRED:

1/2" Out-of-Plumb Adjustment within the u-channel; Verify threshold and walls with a level

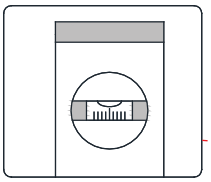

Threshold must be level

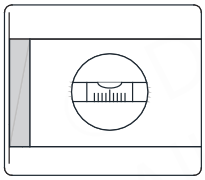

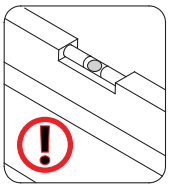

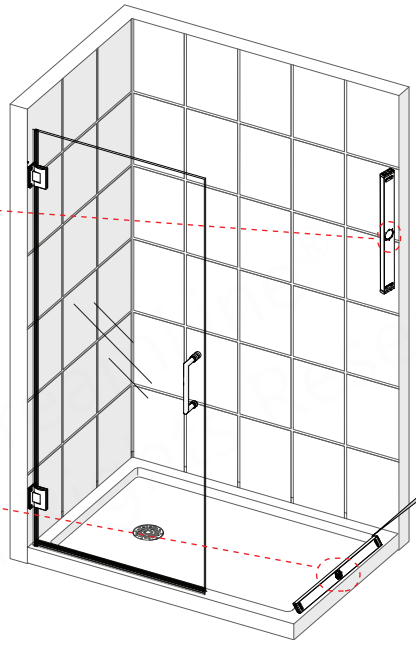

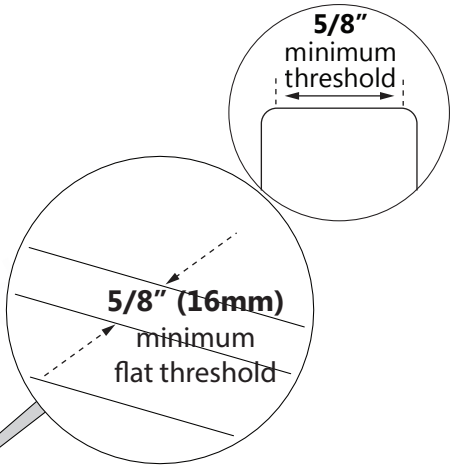

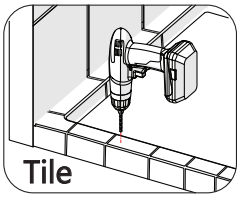

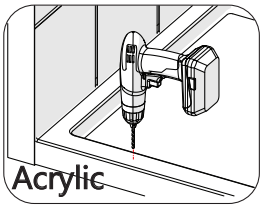

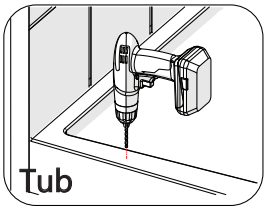

NOTE

Contact the manufacturer of the base, tub or threshold material with any questions regarding the drilling of holes into their product.

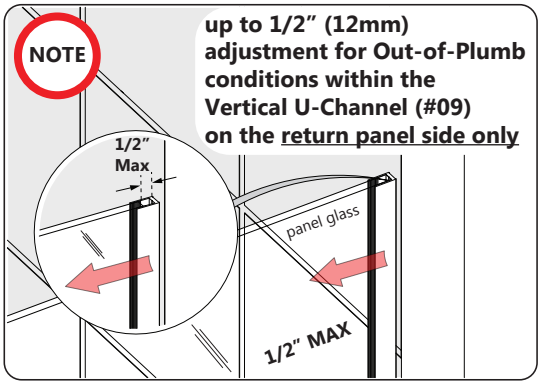

right-hand return panel glass installation shown

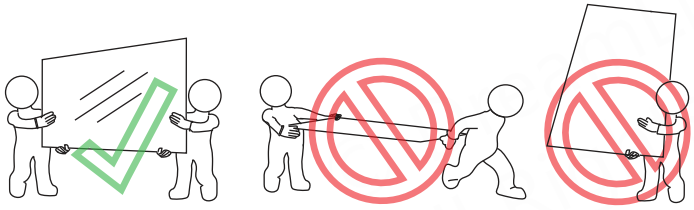

Professional installation and two installers are recommended for this model.

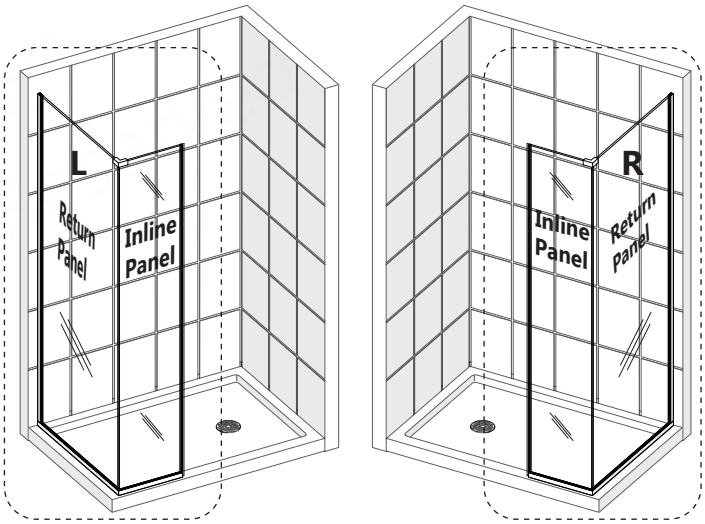

TIP

The Inline and Return Panels are reversible for right or left Enclosure Panel installation. The right-hand enclosure panel installation is shown as an example throughout this manual. For the left-hand enclosure panel installation, simply begin on the opposite wall and reverse the orientation of the installation steps shown.

©2020 DreamLine® All Rights Reserved

UNIDOOR PLUS

STYLE I

Shower Enclosure Plan

Unidoor Plus models with Glass-to-Wall hinges

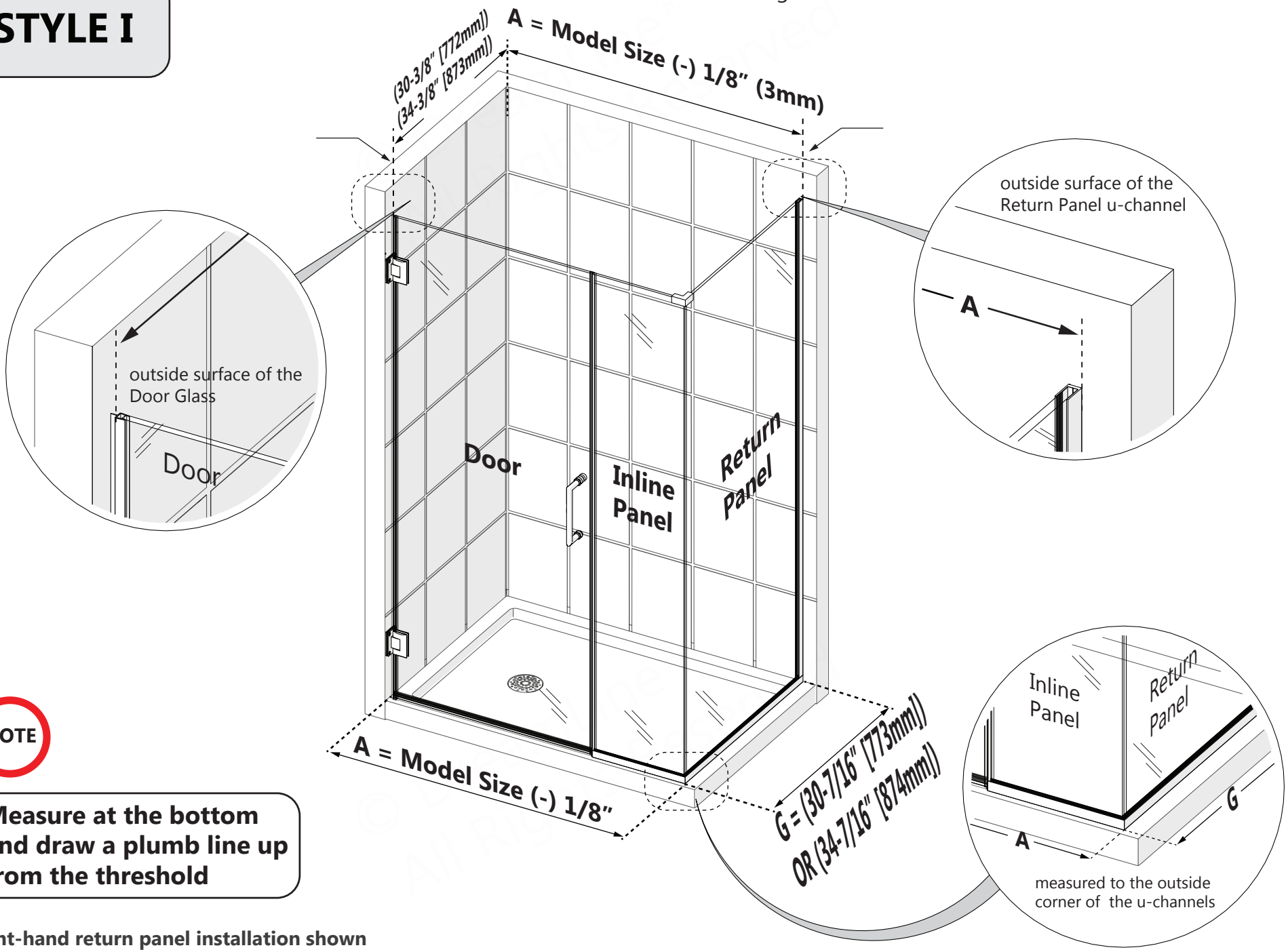

NOTE

Measure at the bottom and draw a plumb line up from the threshold

right-hand return panel installation shown

© 2020 DreamLine® All Rights Reserved

Shower Enclosure Plan

Unidoor Plus models with Glass-to-Wall hinges

UNIDOOR PLUS

STYLE I

Style I

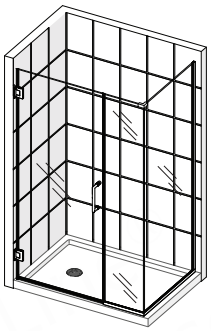

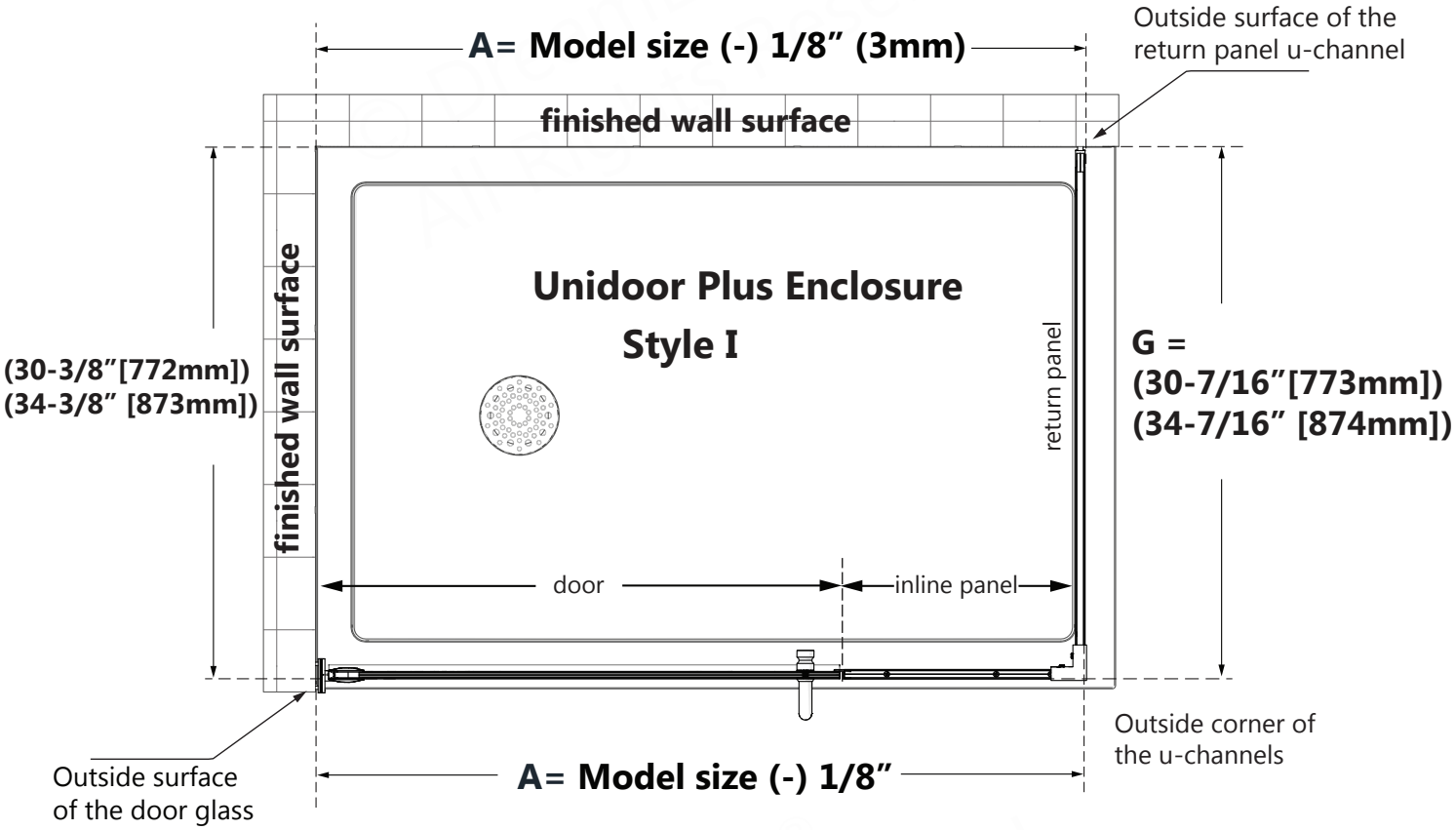

miter cuts for right-hand return panel installation shown as an example

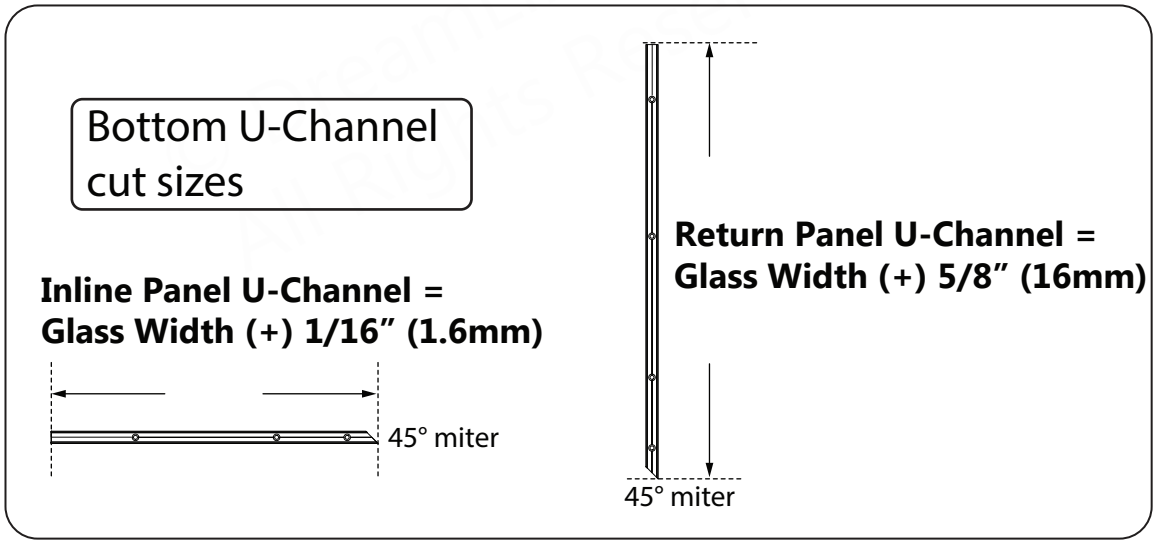

right-hand return panel installation shown

©2020 DreamLine® All Rights Reserved

Shower Enclosure Plan

Unidoor-X models with Glass-to-Glass hinges

UNIDOOR-X

STYLE M3

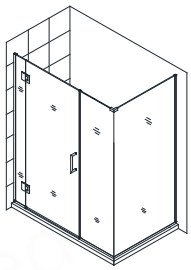

Style M3⁶

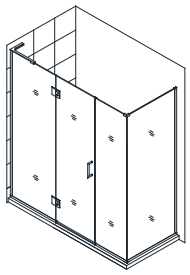

Style M3²⁴

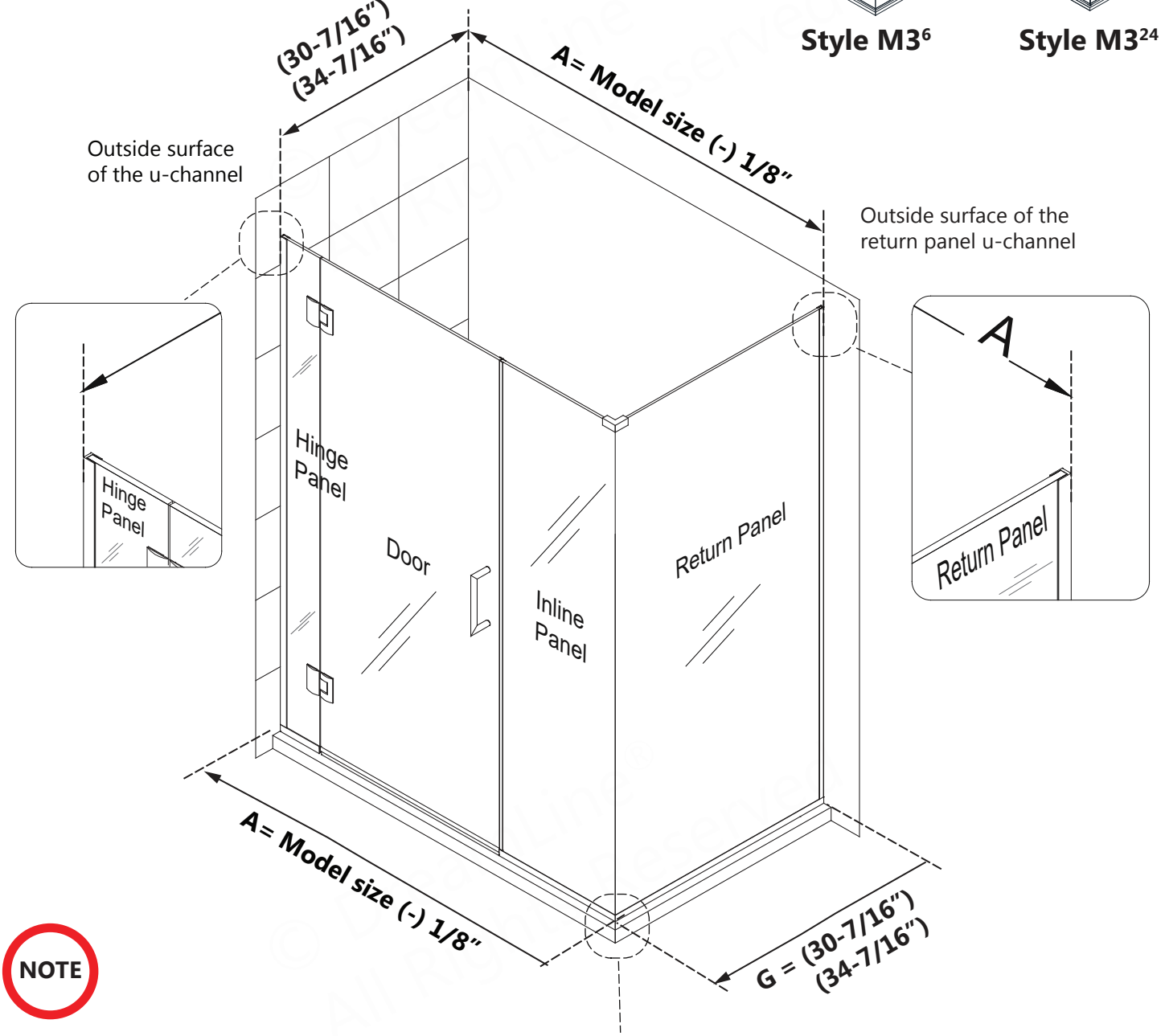

NOTE

Measure at the bottom and draw a plumb line up from the threshold

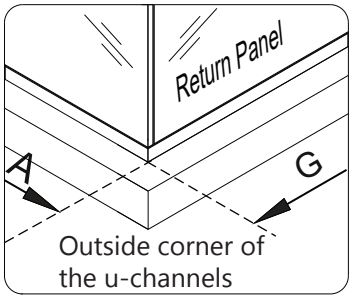

Example: Unidoor-X Enclosure Style M3⁶ right-hand return panel installation shown

©2020 DreamLine® All Rights Reserved

Shower Enclosure Plan

Unidoor-X models with Glass-to-Glass hinges

UNIDOOR-X

STYLE M3

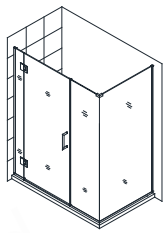

Style M3⁶

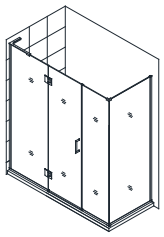

Style M3²⁴

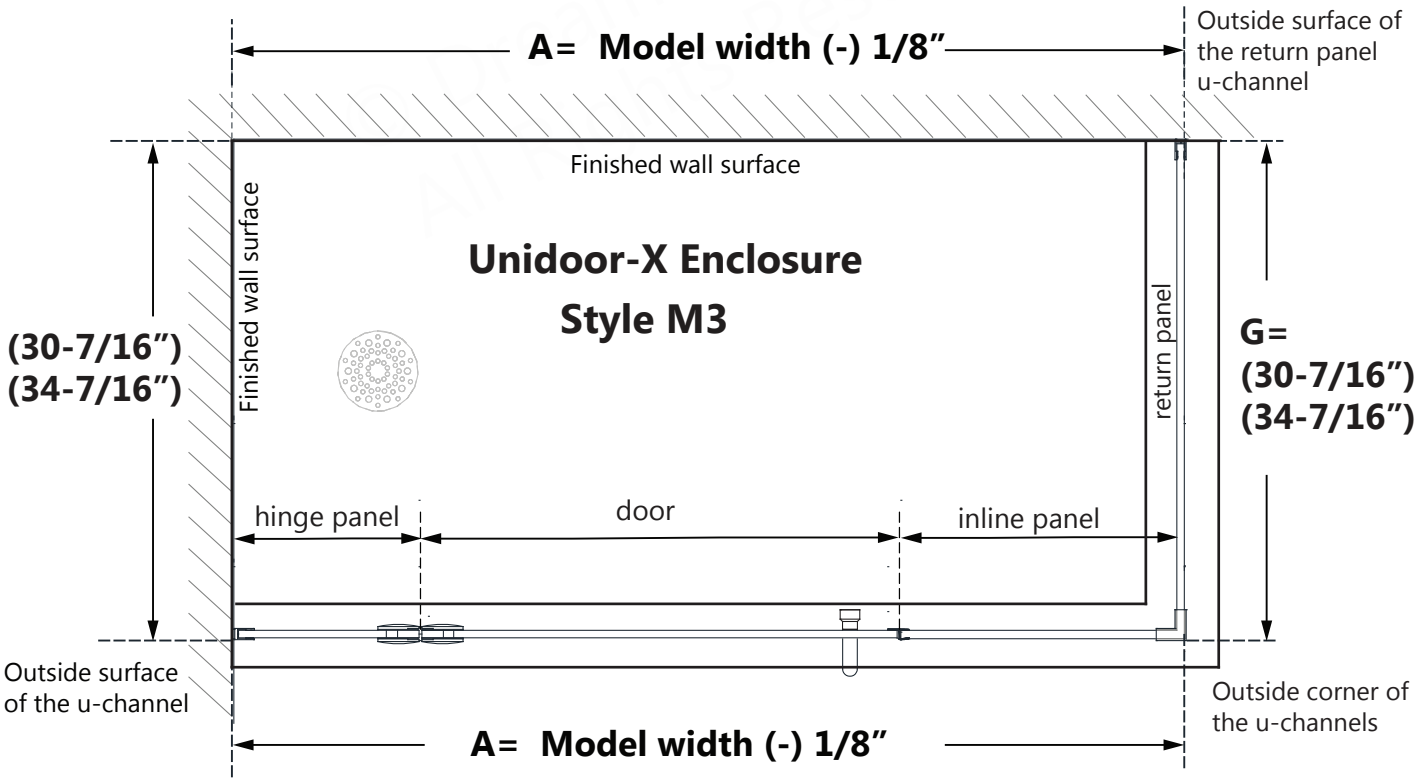

miter cuts for right-hand return panel installation shown as an example

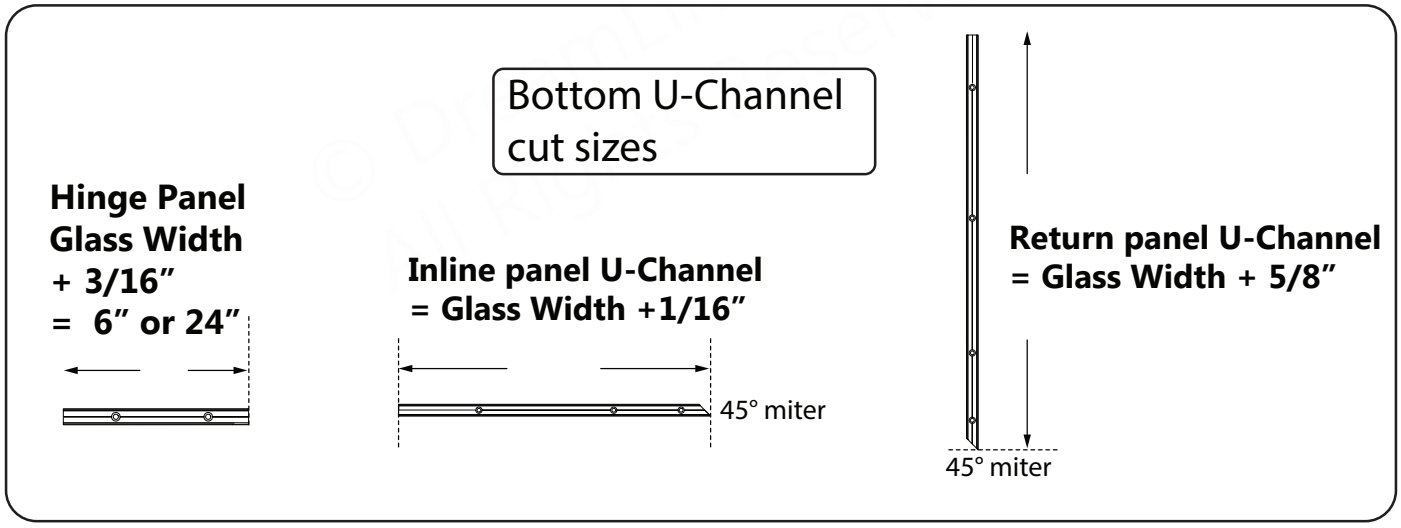

Example: Unidoor-X Enclosure Style M3⁶
right-hand return panel installation shown

©2020 DreamLine® All Rights Reserved

Tools


Level

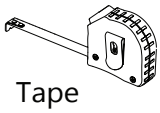
Tape Measure

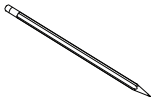
Pencil

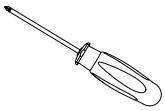
#2 Phillips Screwdriver

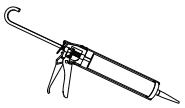
100% Silicone


Power Drill


#2 Phillips Driver Bit


Drill Bit Ø1/8" (3mm)


Drill Bit Ø3/16" (4mm)


Drill Bit Ø5/16" (8mm)


Soft Head Hammer

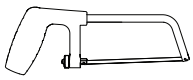
Hacksaw **or**

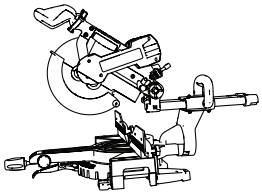
Miter Saw

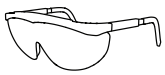
Safety Glasses


Work Gloves


Painter's Tape

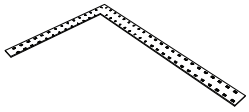
Carpenter's Square


Razor Knife

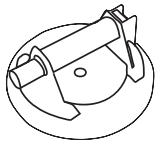
Professional-grade Glass suction cup
(Optional but Recommended)

TIP

Verify that the correct model size has been ordered; measure the finished opening **before** proceeding with the installation.

Confirm that the finished walls are plumb and the threshold is level and pitched into the shower area.

Use a good quality waterproof, mildew-resistant 100% silicone.

Cover the shower drain with tape prior to installation to prevent the loss of screws or small parts.

NOTE

Unpack your unit carefully and inspect it. Lay it out and identify all parts using the **Detailed Diagram** on page **9**; and packing list in this manual as a reference. Before discarding the carton, check for small hardware bags that may have fallen to the bottom of the box. If any parts are damaged or missing, please contact DreamLine® for replacement. The shipping boxes may contain extra parts not used in your model configuration.
Retain these installation instructions for future reference.

©2020 DreamLine® All Rights Reserved

Detailed Diagram of Shower Enclosure Components

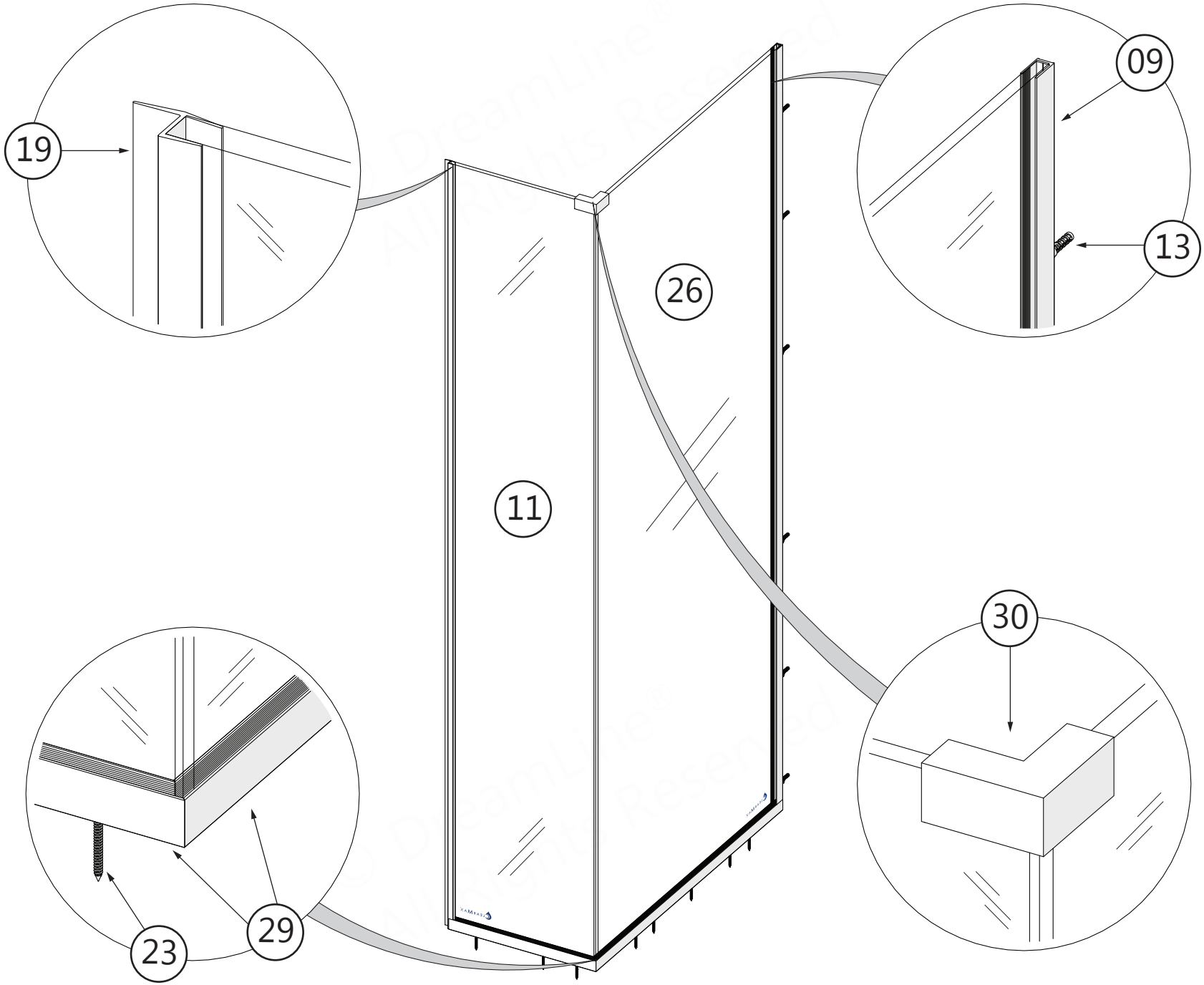

right-hand return panel installation shown

© 2020 DreamLine® All Rights Reserved

Parts List

09

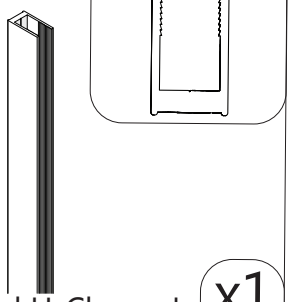

Vertical U-Channel x1

11

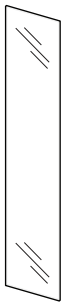

Inline Panel Glass x1

13

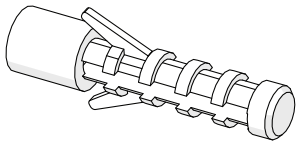

Wall Anchor
8mm (5/16")
x14

19

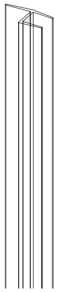

180° Strike Vinyl x1

23

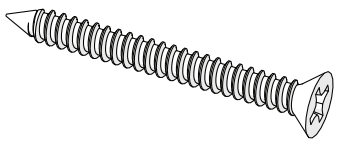

ST4.2×40mm
Countersunk Screw
x14

26

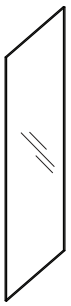

Return Panel Glass x1

28

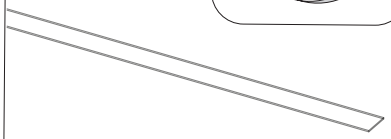

PVC Glass Spacer 0.5mm
(x 36" roll)
x1

29

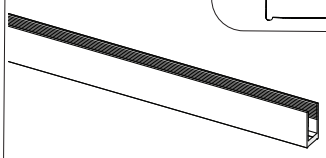

Bottom U-Channel x2

30

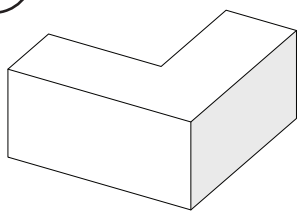

90° Degree Top
Corner Bracket
x1

20*



90° Strike Vinyl x1

NOTE

*The **90˚ Strike Vinyl (#20)** that is packaged with 30" or larger Panel Glass is not used with this shower enclosure configuration.

©2020 DreamLine® All Rights Reserved

The UNIDOOR Shower Door must be installed before proceeding with the following Shower Enclosure Panel installation.

Use the "Shower Enclosure Plan" in this manual for the proper dimensions to install the door glass based on your model size. (see pages 4-7)

Please see the UNIDOOR Single Shower Door Installation Manual packaged with the door glass (or the UNIDOOR-X installation manual that is packaged with the hinge panel glass for that model style) for complete shower door installation instructions.

Before you begin the installation, recheck the finished opening size, the walls for plumb and the threshold for level. Specific model size information can be found on DreamLine.com

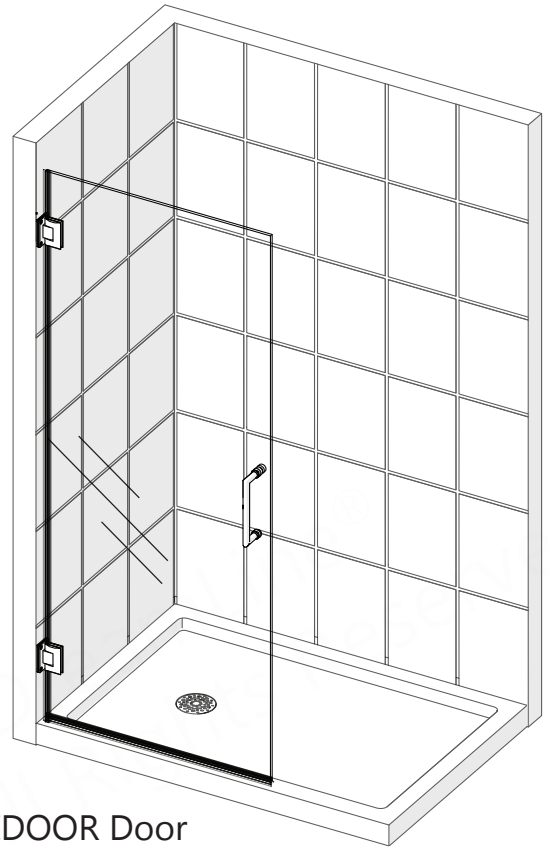

UNIDOOR Door

© 2020 DreamLine® All Rights Reserved

1

Installation Steps

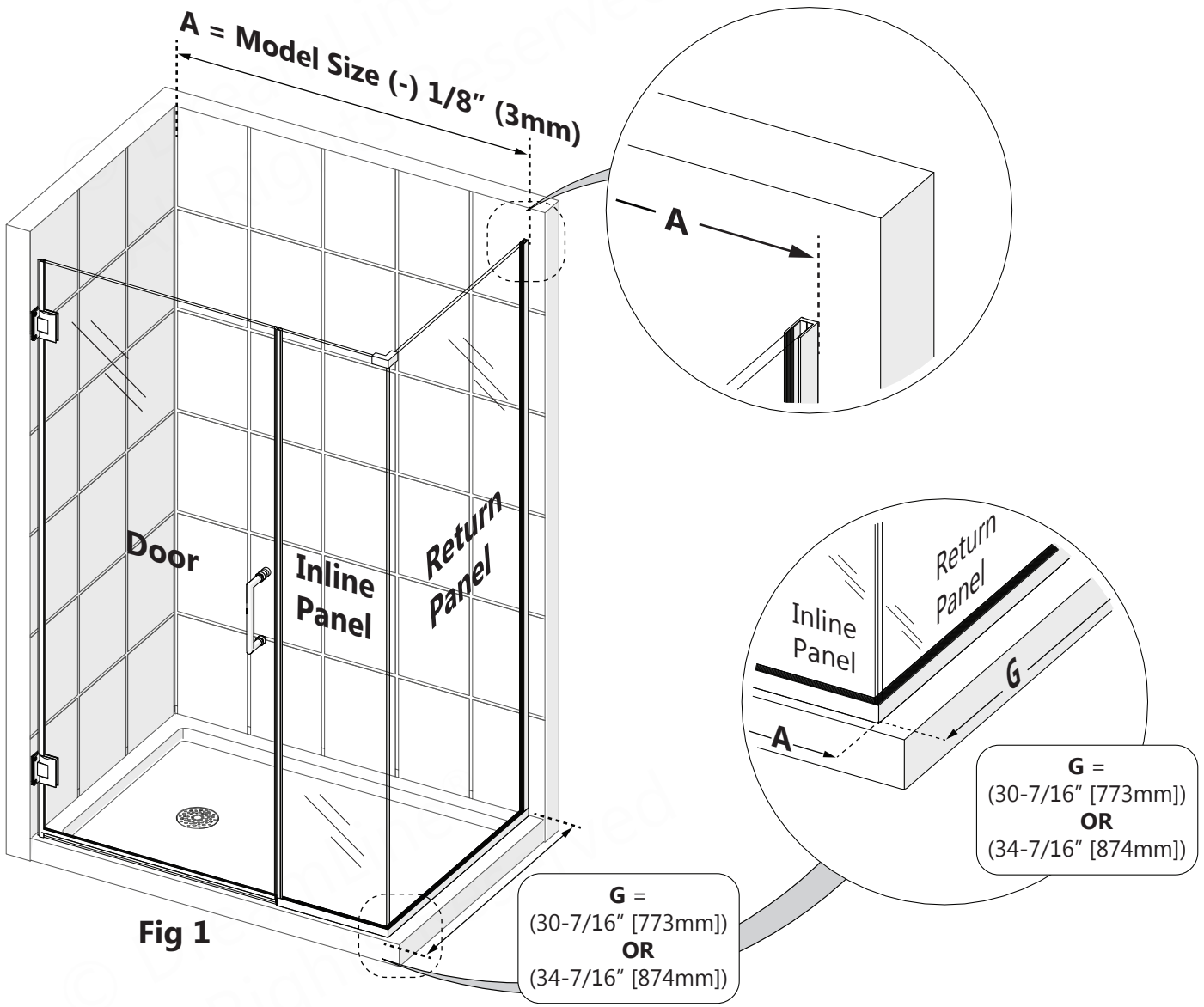

Fig 1

NOTE

Measure at the bottom and draw a plumb line up from the threshold

The **A** and **G** dimensions are from the finished wall to the outside of the U-Channel as shown in **Fig 1**

Tools Needed

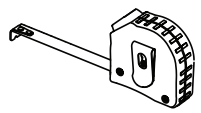

© 2020 DreamLine® All Rights Reserved

2

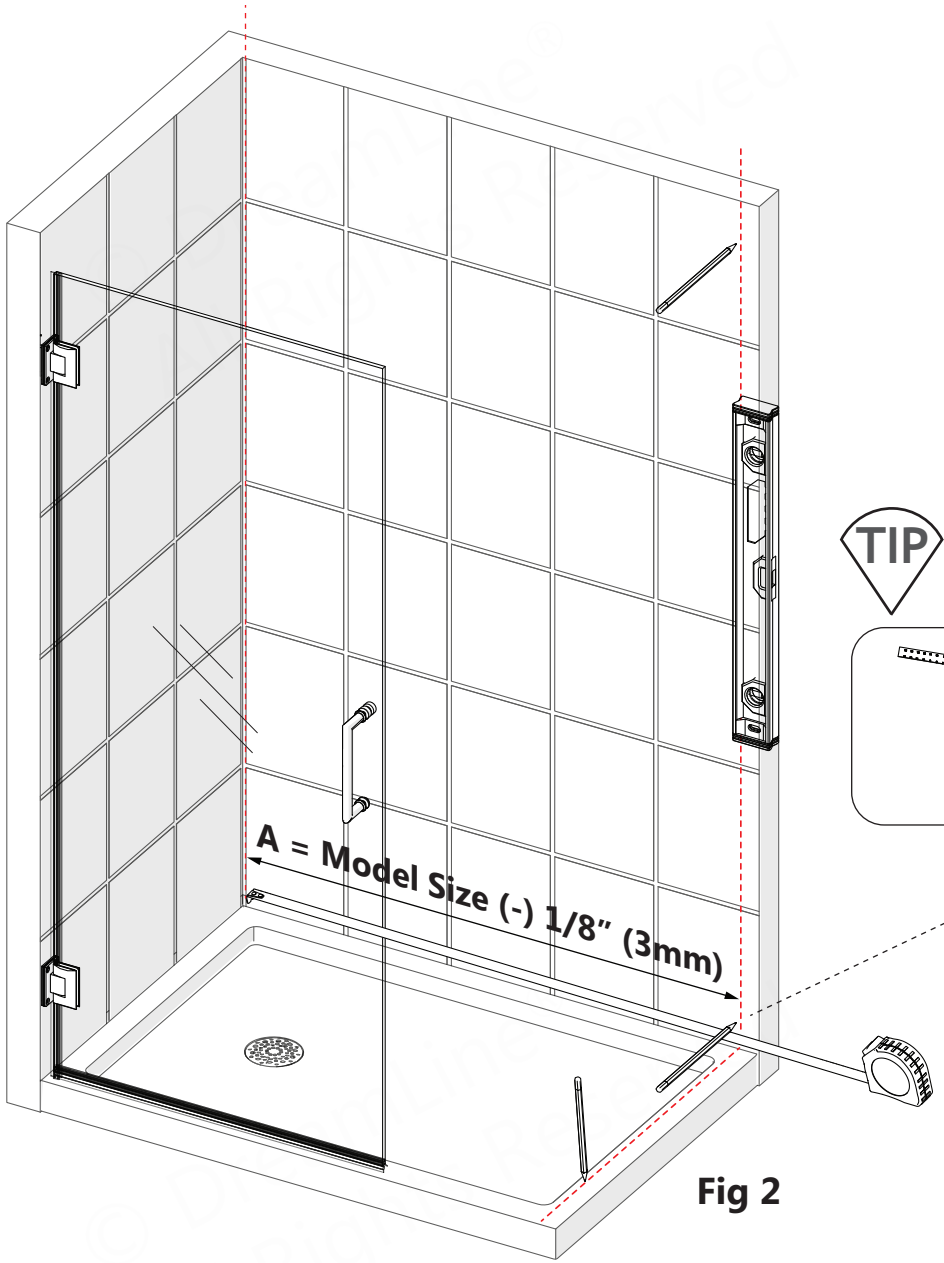

Fig 2

TIP

Use a carpenter's square for accuracy when marking the threshold

NOTE

Measure the enclosure dimensions at the bottom and mark a plumb line up from the threshold to represent the outside dimension of the U-Channel.

Tools Needed

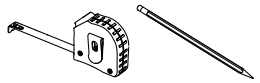

© 2020 DreamLine® All Rights Reserved

3

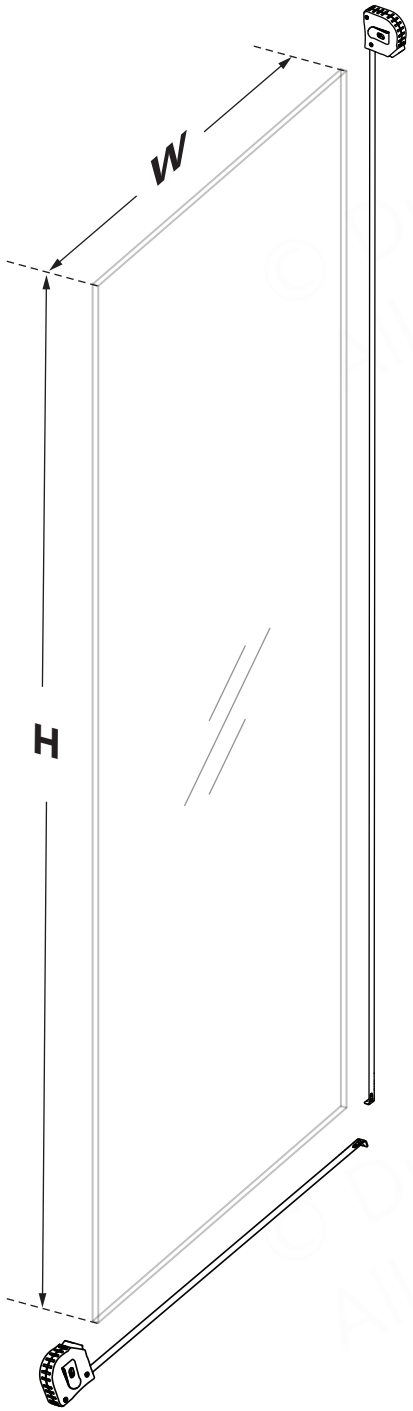

Return Panel Glass Width (W)

Return Panel Glass Height (H)

Fig 3

Parts Needed

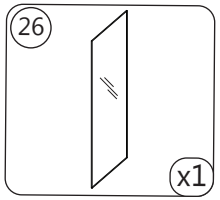

Tools Needed

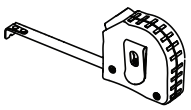

© 2020 DreamLine® All Rights Reserved

4

Cut the Return Panel Bottom U-Channel to:

Glass Width (W) + 5/8" (16mm) = (L)** (see exception below)

Fig 4a

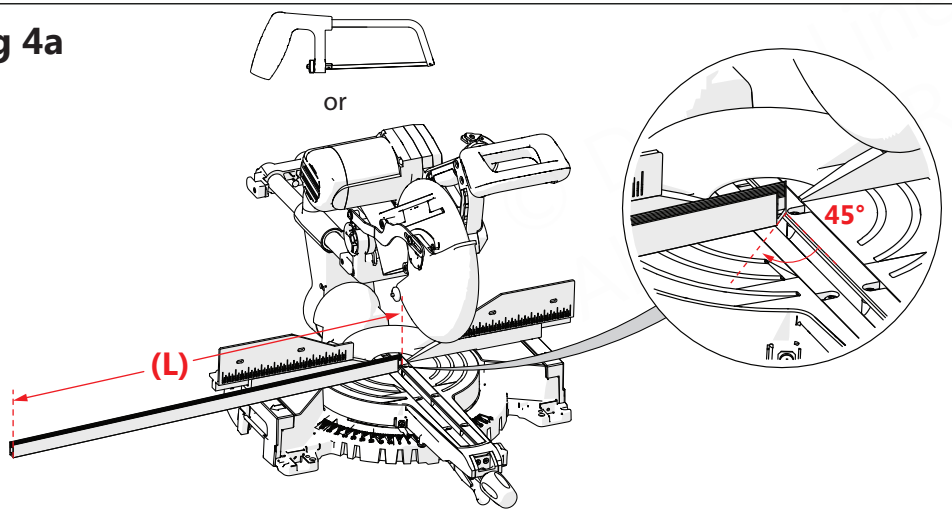

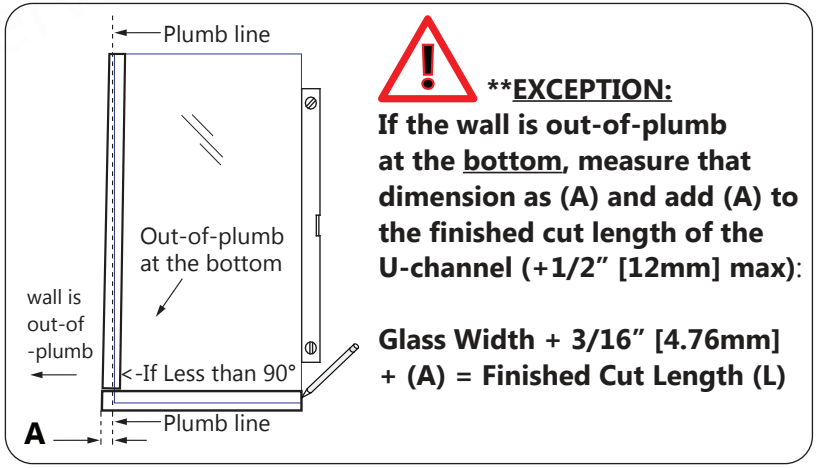

****EXCEPTION:**
If the wall is out-of-plumb at the bottom, measure that dimension as (A) and add (A) to the finished cut length of the U-channel (+1/2" [12mm] max):

Glass Width + 3/16" [4.76mm] + (A) = Finished Cut Length (L)

Fig 4b

NOTE **All 45° cuts are referenced from the outside dimension.**

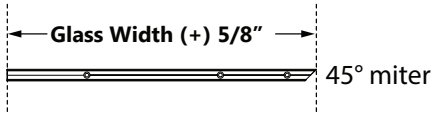

miter cut for right-hand return panel installation shown

Cut the Return Panel Vertical U-Channel to:

Glass Height (H) (-) 13/16" (20.6mm) = (V); (for 72" model height, V= 71" (1803.6mm)

Fig 4c

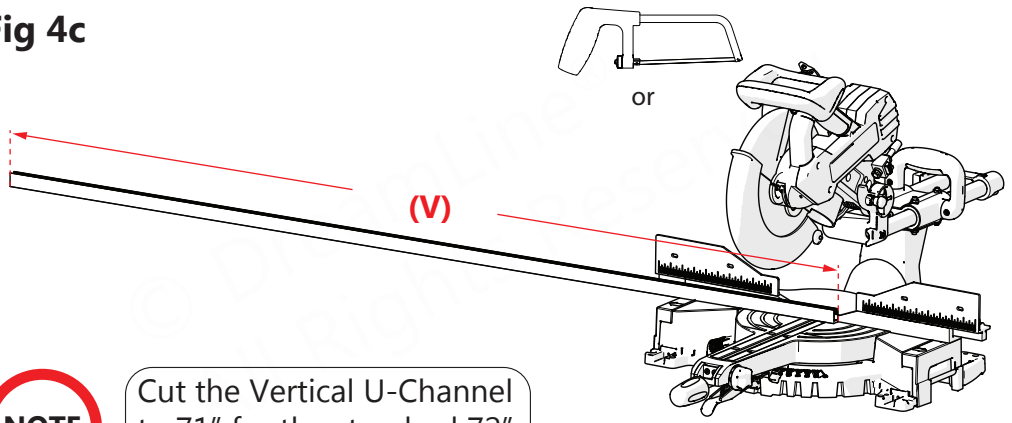

TIP

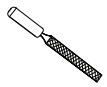

Use a metal file to deburr the cut ends.

NOTE Cut the Vertical U-Channel to 71" for the standard 72" model height.

Parts Needed

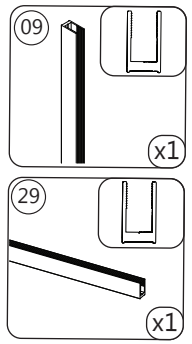

Tools Needed

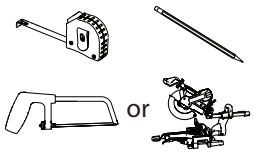

© 2020 DreamLine® All Rights Reserved

5

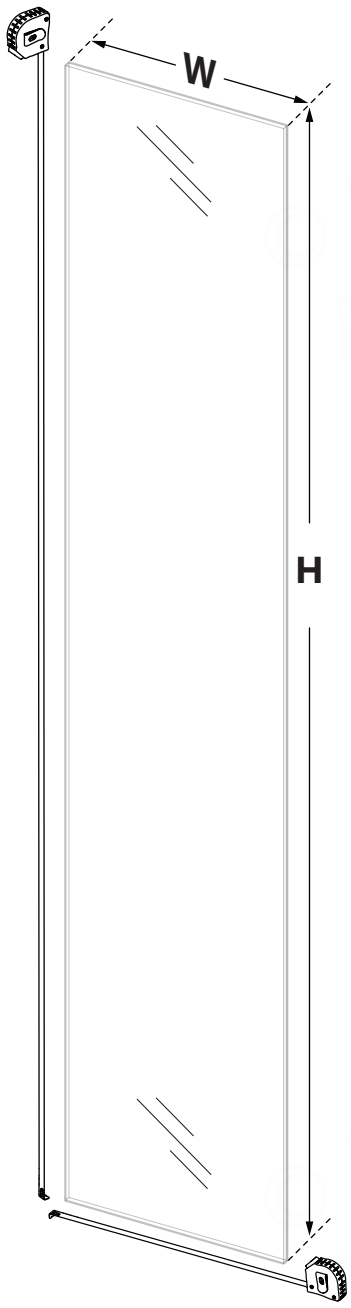

Inline Panel Glass Width (W)

Inline Panel Glass Height (H)

Fig 5

Parts Needed

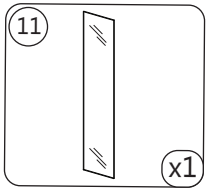

Tools Needed

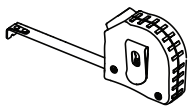

© 2020 DreamLine® All Rights Reserved

6

Cut the Inline Panel Bottom U-Channel to:
Glass Width (W) + 1/16" (1.6mm) = (L)

Fig 6

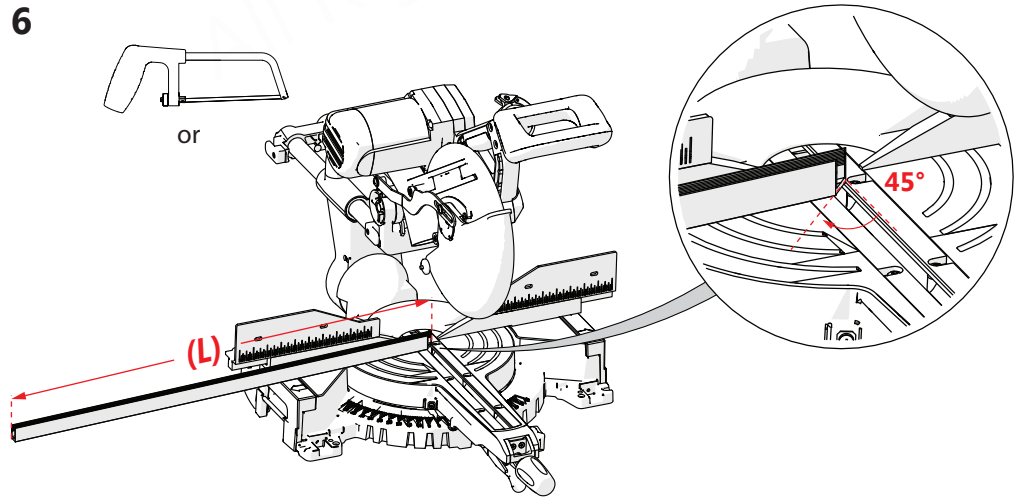

NOTE

All 45° cuts are referenced from the outside dimension.

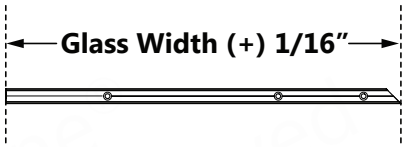

miter cut for right-hand return panel installation shown

TIP



Use a metal file to deburr the cut end

Parts Needed

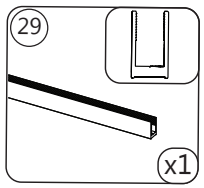

Tools Needed

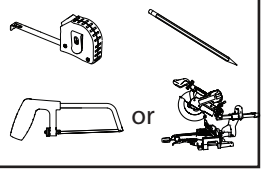

© 2020 DreamLine® All Rights Reserved

7

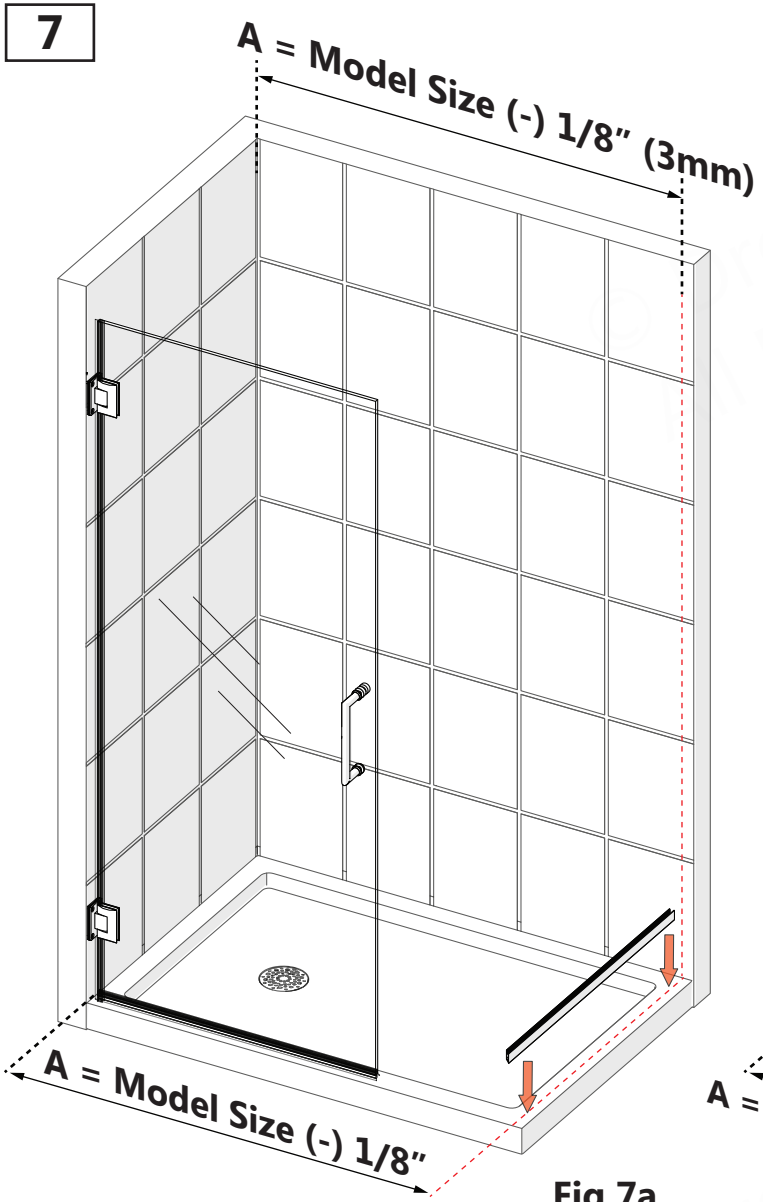

Fig 7a

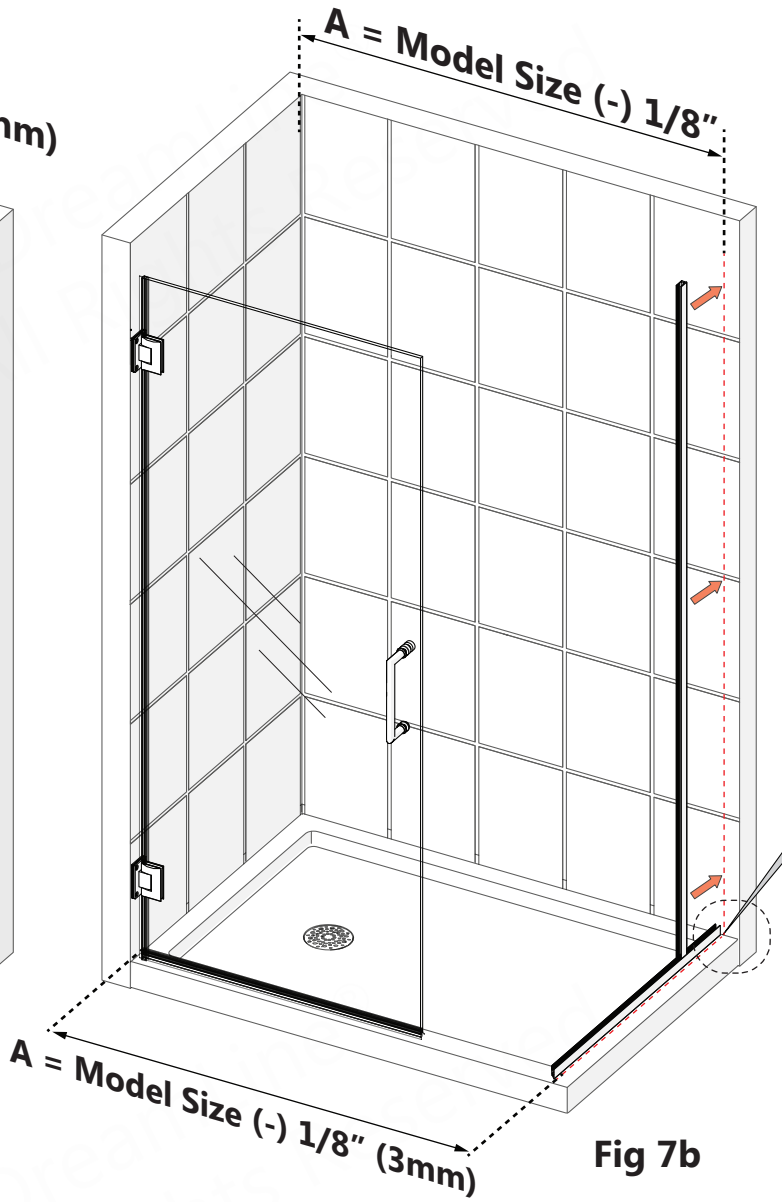

Fig 7b

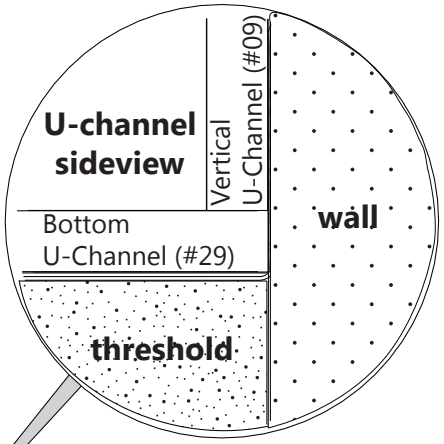

Parts Needed

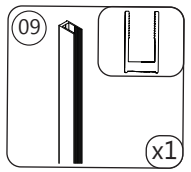

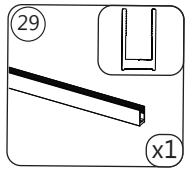

Tools Needed

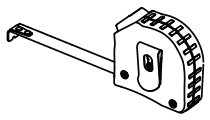

NOTE

Measure at the bottom and draw a plumb line up from the threshold

© 2020 DreamLine® All Rights Reserved

8

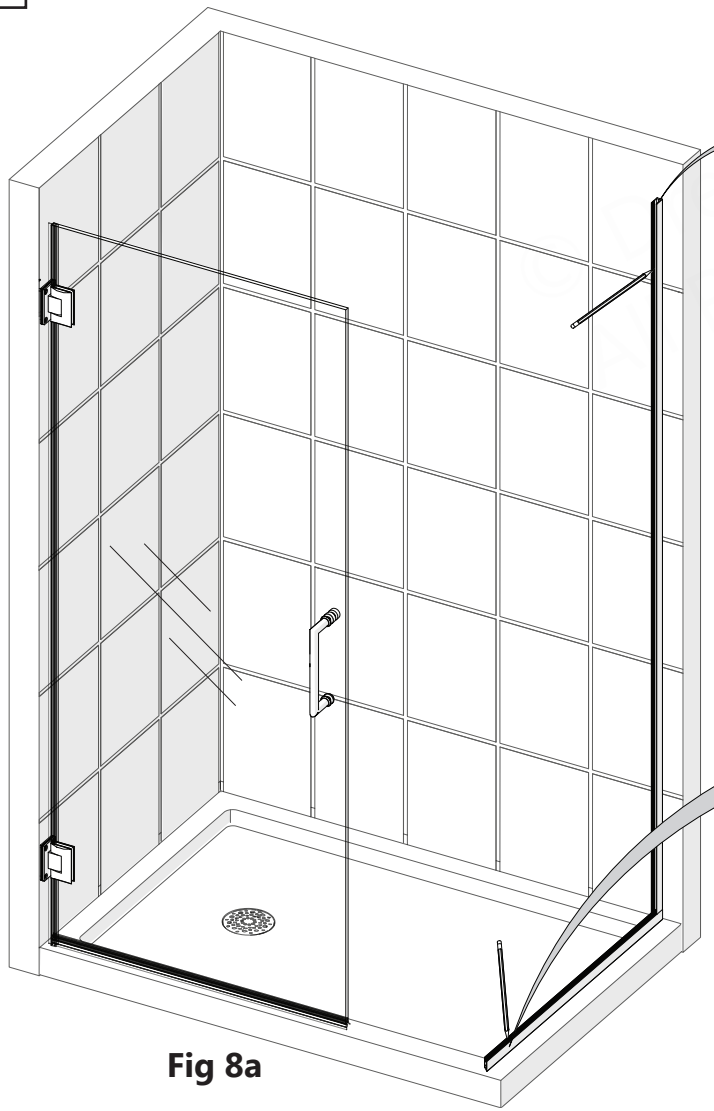

Fig 8a

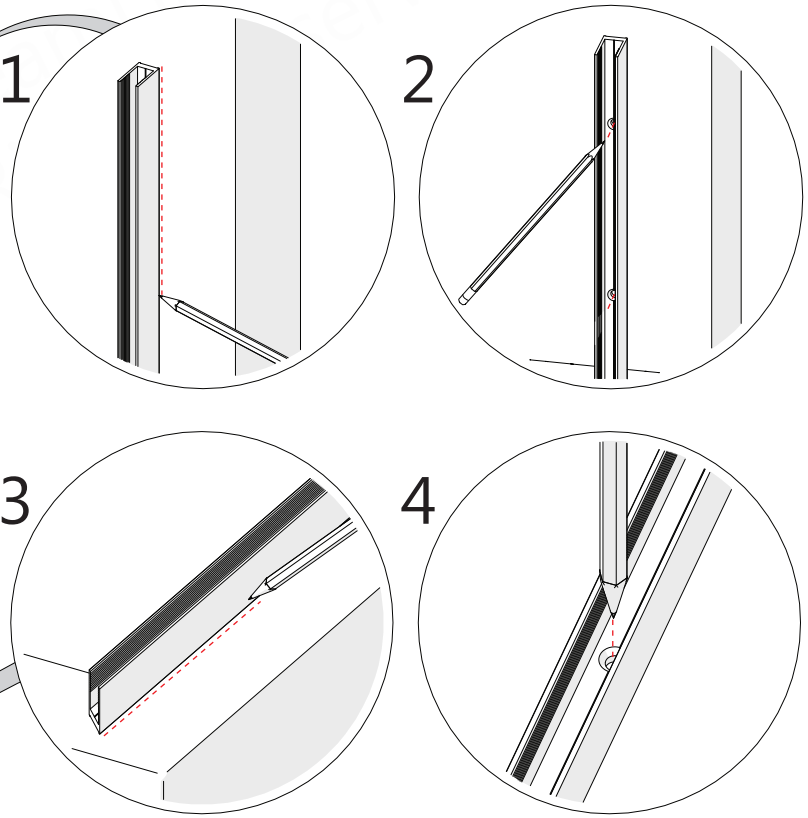

NOTE

Use at least 4 screws to attach the vertical u-channel and 3 to attach the bottom u-channel

Parts Needed

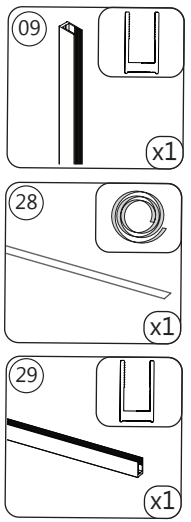

Tools Needed



Cut several 2” - 3” (51mm - 76mm) pieces of the the PVC Glass Spacer 0.5mm (#28) and set aside for later use. <u>DO NOT</u> install one long continuous piece into the Bottom (#29) U-Channel!

Fig 8b

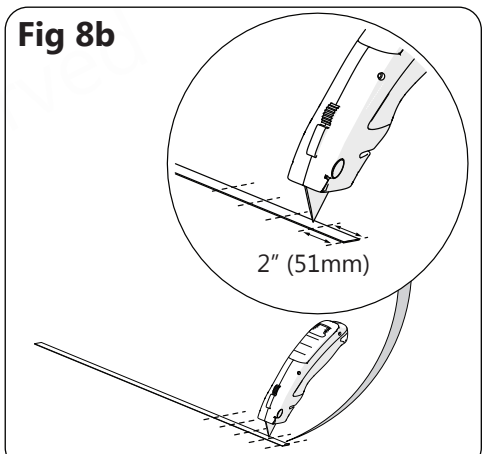

© 2020 DreamLine® All Rights Reserved

9

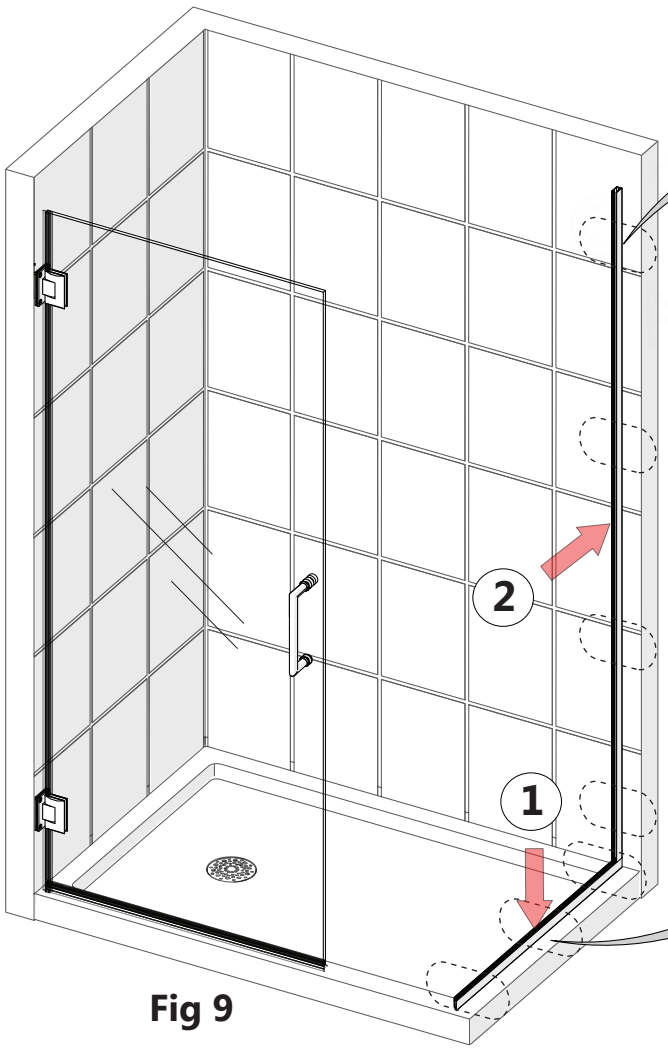

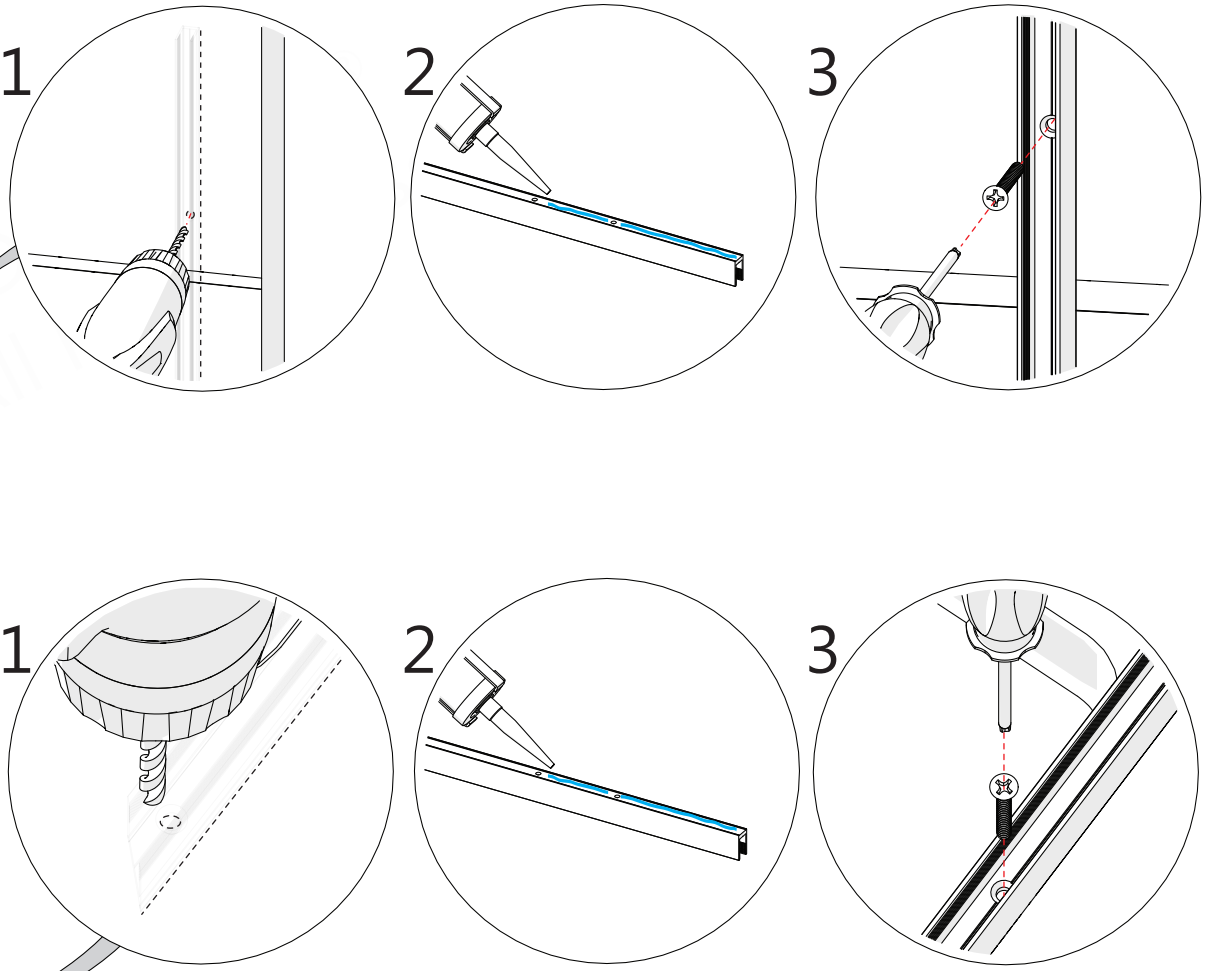

Fig 9

- For installation into an **Acrylic Threshold**:
  drill a **Ø1/8"(3mm)** hole and use the **ST4.2 x 40mm Countersunk Screw(#23)**

OR

- For installation into a **Tile Threshold**:
  drill a **Ø3/16"(4mm)** hole to the stud, drill an **Ø1/8"(3mm)** pilot hole into the stud and use the **ST4.2 x 40mm Countersunk Screws (#23).**

- **If a stud is present behind the wall**:
  drill a **Ø3/16"(4mm)** hole to the stud, drill an **Ø1/8"(3mm)** pilot hole into the stud and use the **ST4.2 x 40mm Countersunk Screws (#23).**

OR

- **If no stud is present behind the wall**:
  drill a **Ø5/16"(7mm)** hole and insert the **Wall Anchors (#08)** and use the **ST4.2 x 40mm Countersunk Screws (#23).**

Parts Needed

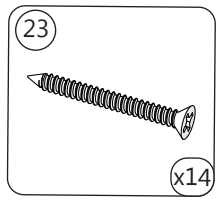

Tools Needed

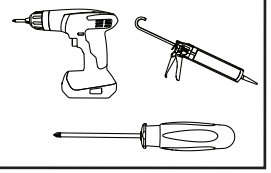

© 2020 DreamLine® All Rights Reserved

10

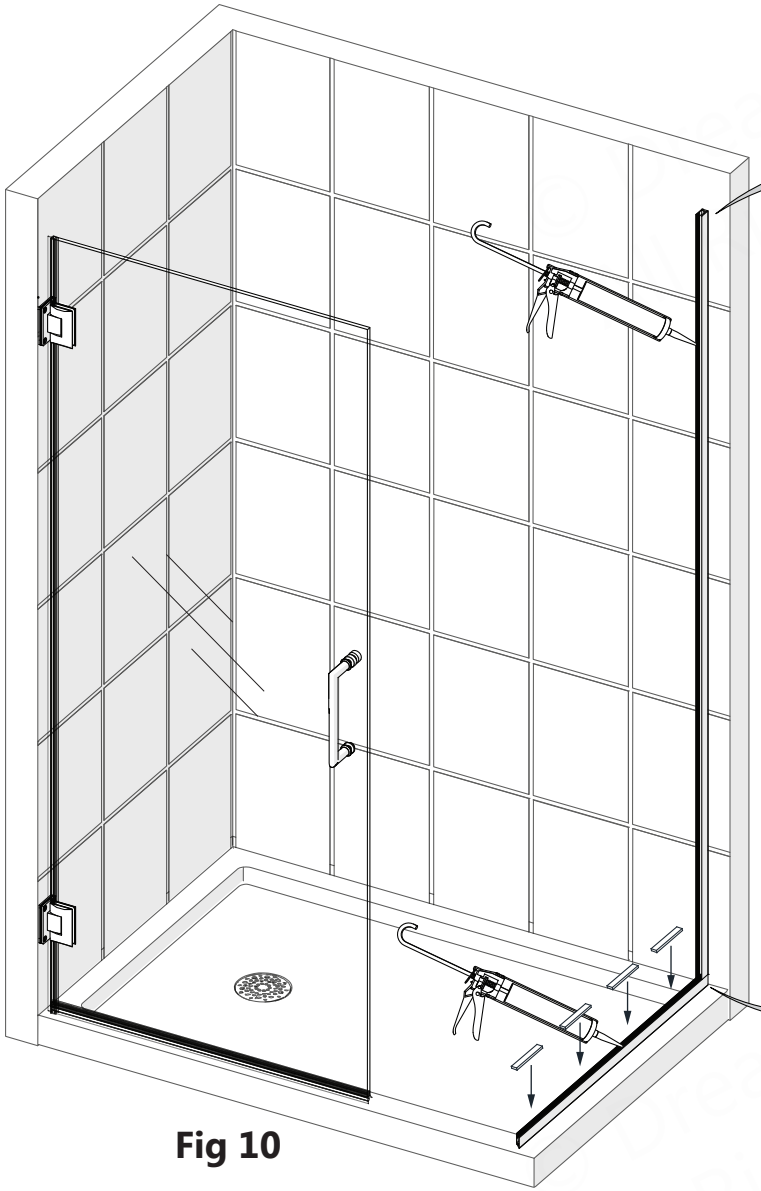

Fig 10

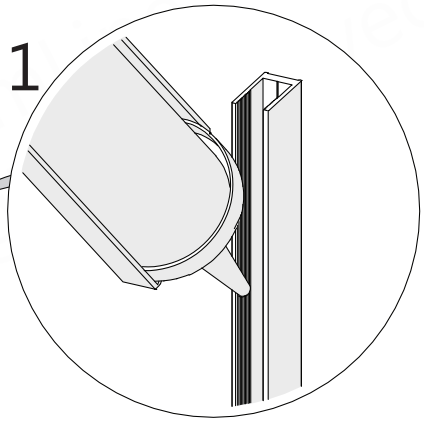

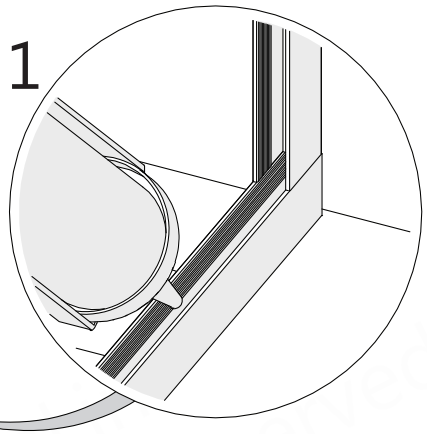

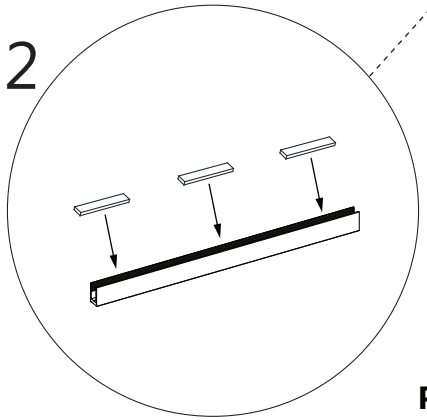

After applying silicone into the bottom u-channel, insert the cut pieces of the **PVC Spacers 0.5mm (#28)** into the **Bottom U-Channel (#29)** to prevent glass-to-metal contact.

Parts Needed

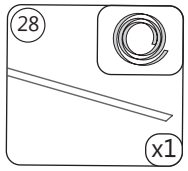

Tools Needed

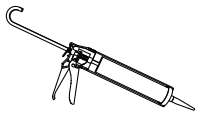

© 2020 DreamLine® All Rights Reserved

11

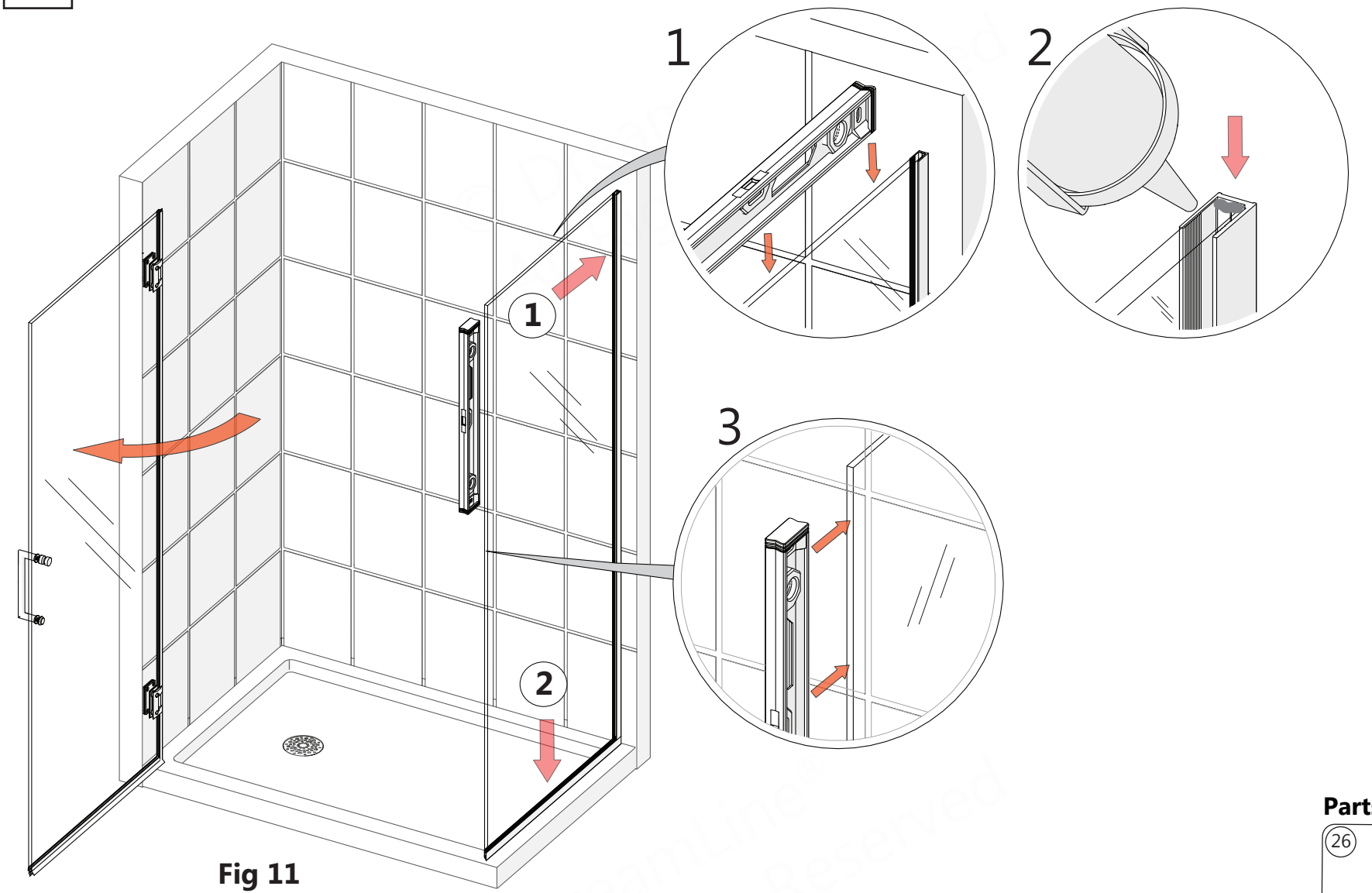

Fig 11

Parts Needed

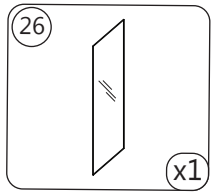

Tools Needed

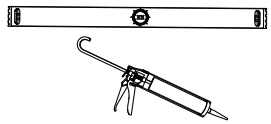

TIP

If necessary, add additional **PVC Glass Spacers 0.5mm (#28)** into the **Bottom U-Channel (#29)** to level the panel glass. Do Not Exceed 1/4" (6mm) of vertical adjustment. Panel Glass must match the installed door glass and other panel glass at the standard model height of 72" 1829mm).

© DreamLine® All Rights Reserved

© 2020 DreamLine® All Rights Reserved

12

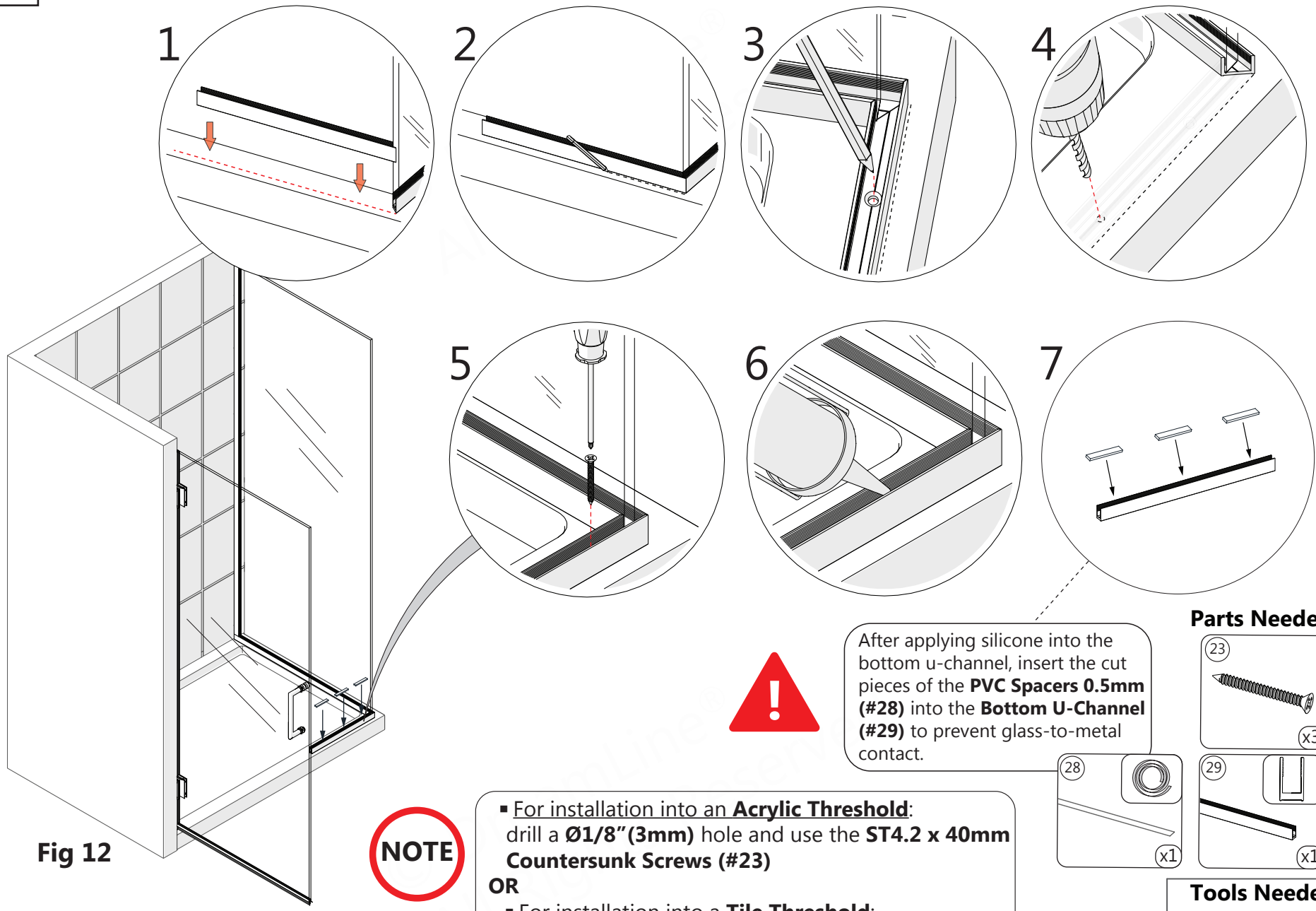

Fig 12

NOTE

Use at least 2 screws to attach the bottom u-channel for panels up to 14" (355mm)

NOTE

- For installation into an **Acrylic Threshold**: drill a **Ø1/8"(3mm)** hole and use the **ST4.2 x 40mm Countersunk Screws (#23)**

OR

- For installation into a **Tile Threshold**: drill a **Ø3/16"(4mm)** hole to the stud, drill an **Ø1/8"(3mm)** pilot hole into the stud and use the **ST4.2 x 40mm Countersunk Screws (#23).**

After applying silicone into the bottom u-channel, insert the cut pieces of the **PVC Spacers 0.5mm (#28)** into the **Bottom U-Channel (#29)** to prevent glass-to-metal contact.

Parts Needed

Tools Needed

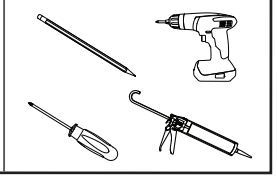

© 2020 DreamLine® All Rights Reserved

13

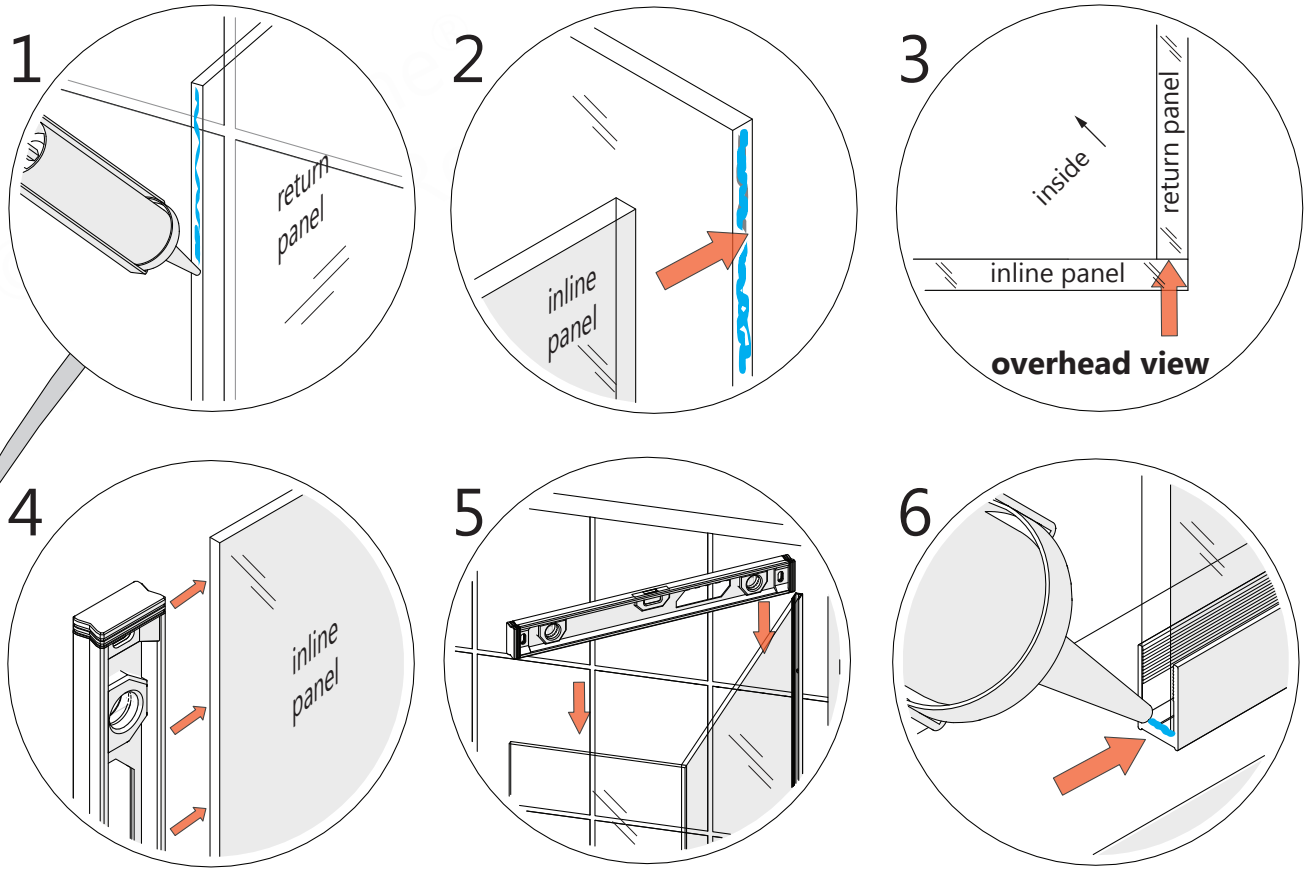

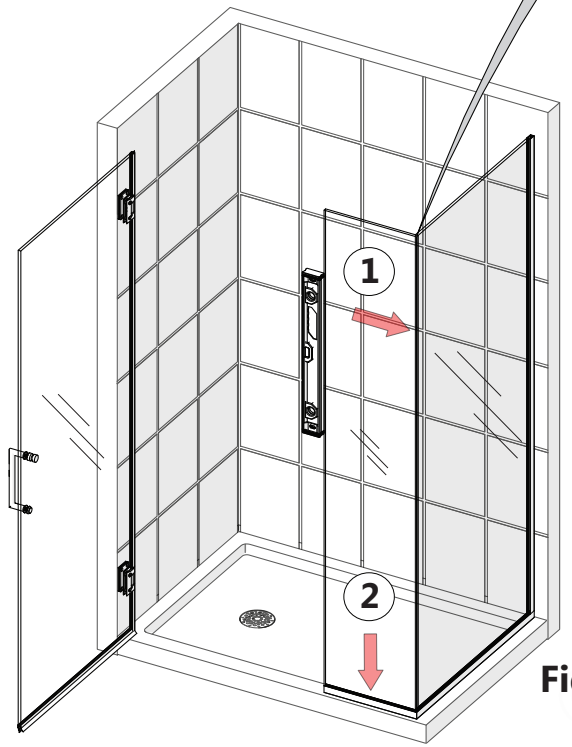

Fig 13

Parts Needed

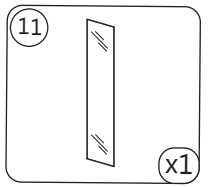

Tools Needed

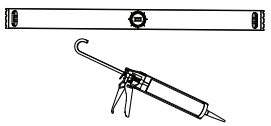

TIP

If necessary, add additional **PVC Glass Spacers 0.5mm (#28)** into the **Bottom U-Channel (#29)** to level the panel glass. Do Not Exceed 1/4" (6mm) of vertical adjustment. Panel Glass must match the installed door glass and other panel glass at the standard model height of 72" (1829mm).

© 2020 DreamLine® All Rights Reserved

14

90° Top Corner Bracket Installation

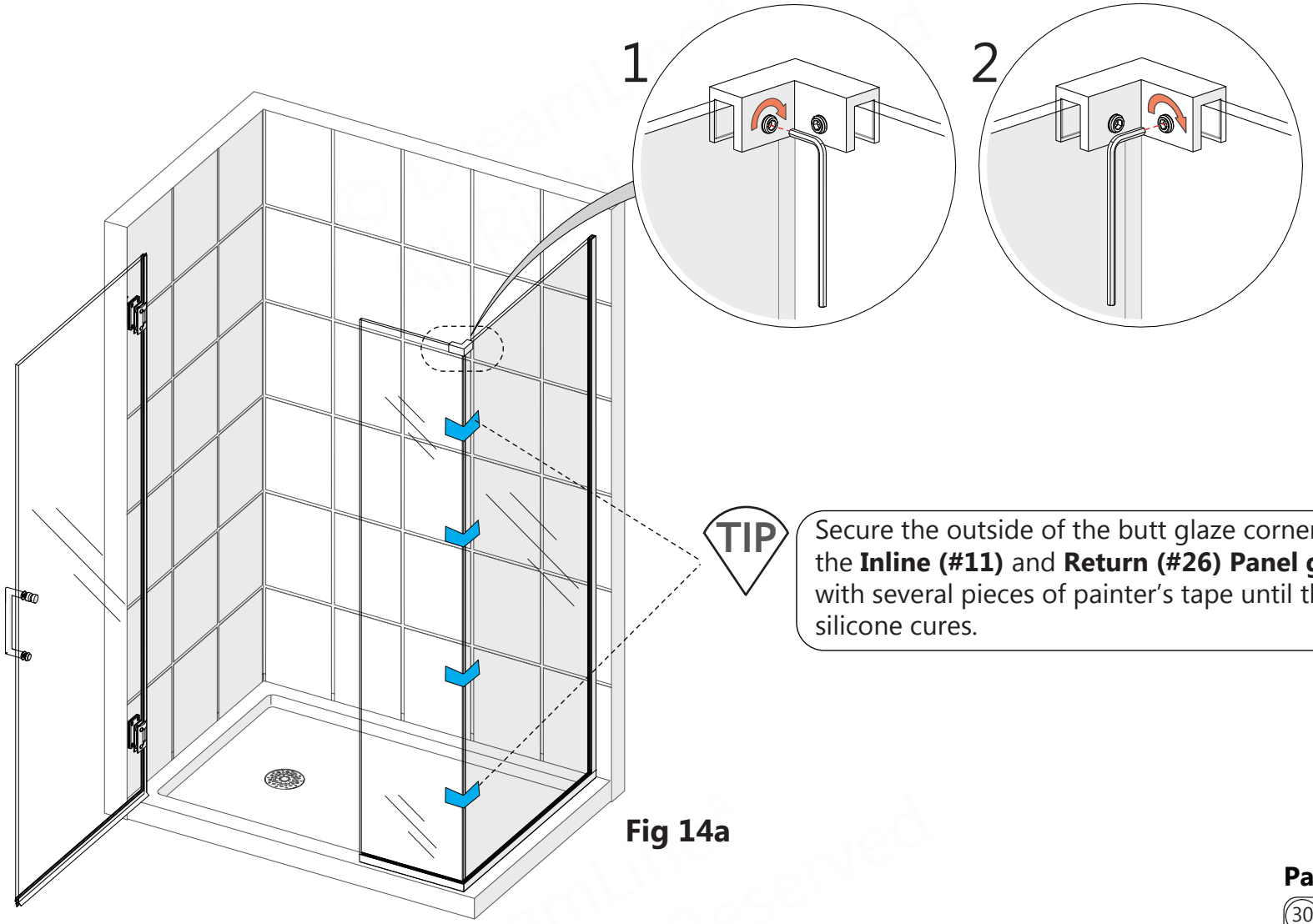

Fig 14a

TIP Secure the outside of the butt glaze corner of the **Inline (#11)** and **Return (#26) Panel glass** with several pieces of painter's tape until the silicone cures.

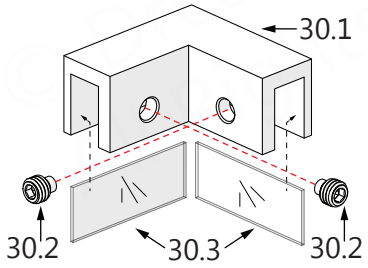

Fig 14b

90° Top Corner Bracket (#30)		
Part	**Description**	**QTY**
30.1	90° Top Corner Bracket	1 pc
30.2	Bracket Set Screw	2 pcs
30.3	Vinyl Gasket	2 pcs

Parts Needed

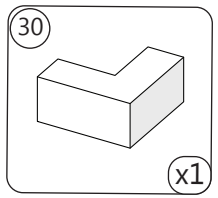

Tools Needed

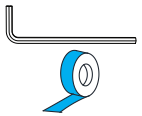

© 2020 DreamLine® All Rights Reserved

15

NOTE **The surfaces need to be clean and free of debris before applying silicone.**

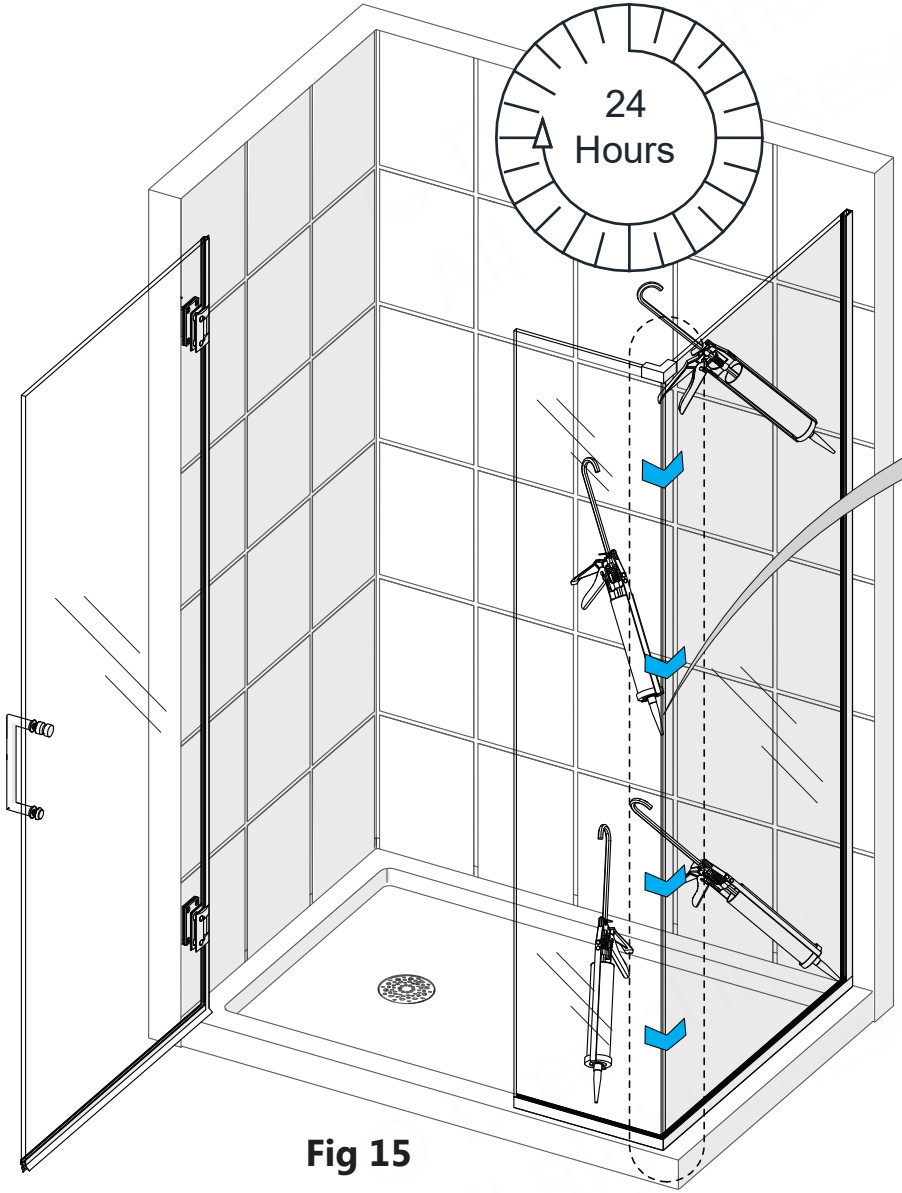

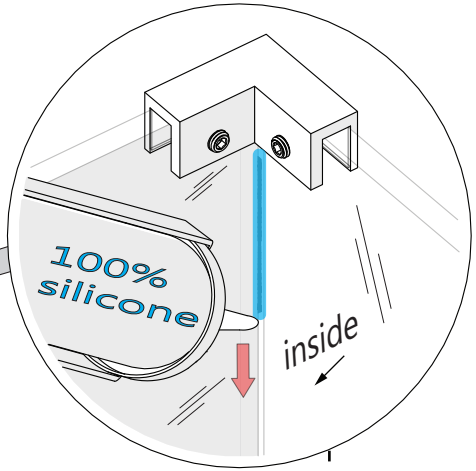

TIP Apply a bead of 100% silicone on the inside corner of the shower where the two glass panels intersect.

Fig 15

Allow 24 hours for the silicone caulk to cure before using shower.

Tools Needed

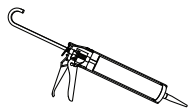

© 2020 DreamLine® All Rights Reserved

16

180° Strike Vinyl Seal Installation

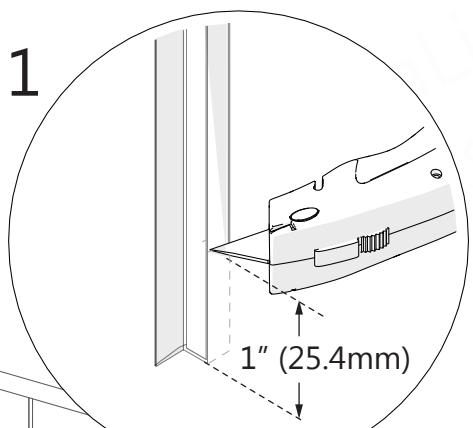

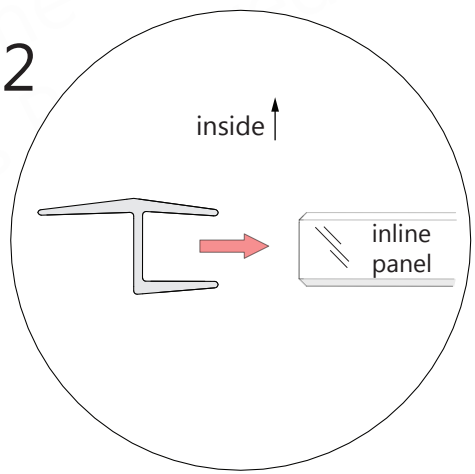

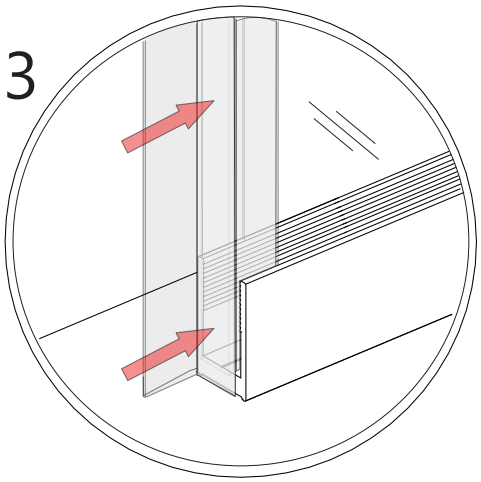

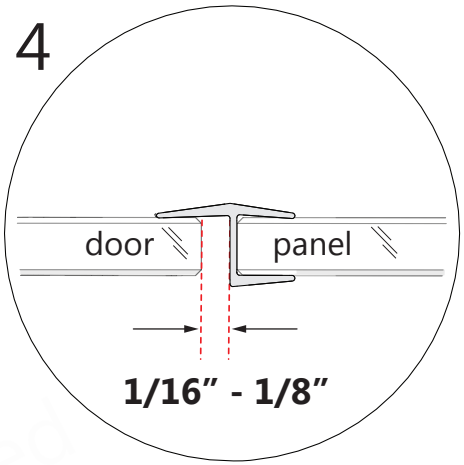

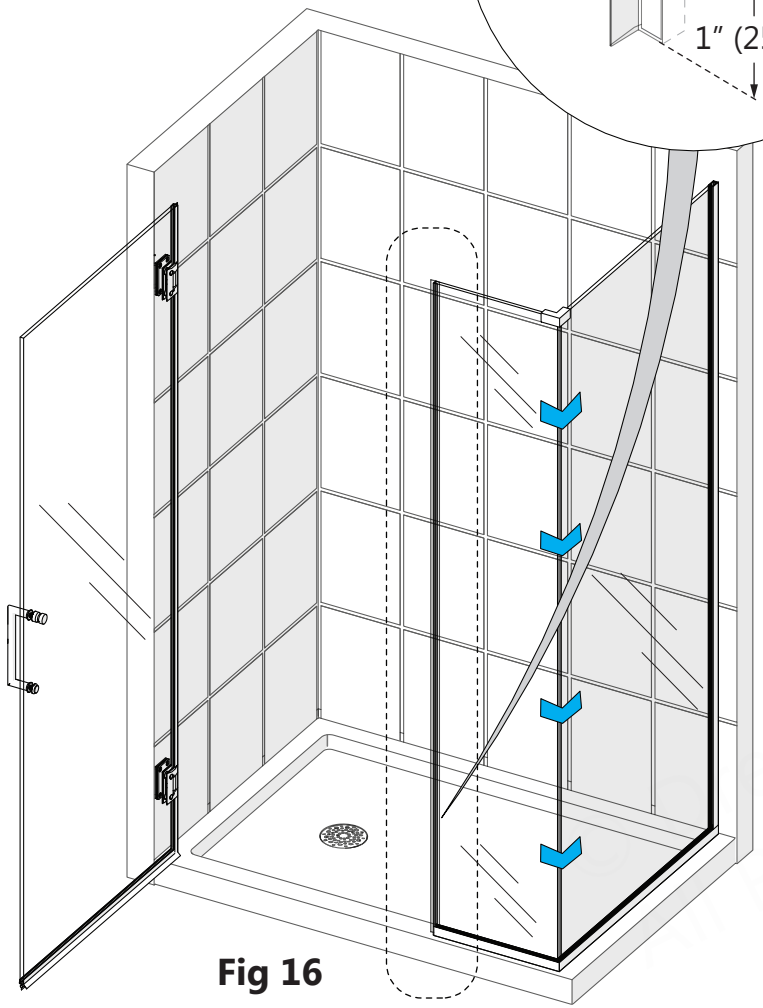

Fig 16

Parts Needed

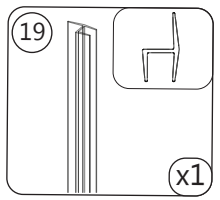

Tools Needed

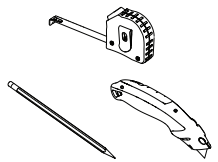

© 2020 DreamLine® All Rights Reserved

Product Maintenance

BASES and BACKWALLS: To ensure long lasting life for your acrylic back walls: wipe them off after each use with a soft cloth. To clean the acrylic back walls use non-abrasive sprays or cream based cleaners. Avoid the use of aerosol spray cleaners. Never use abrasive cleansers, metal brushes or scrapers that could permanently scratch or dull the surface.

GLASS: To ensure long lasting life for your glass shower products: wipe them off after each use with a soft cloth. Rinse and wipe off the glass using either a soft cloth or a squeegee to prevent soap buildup and water spots (Hard water can etch the surface of the glass over time if left to dry). To prevent scratching the surface: never use abrasive cleaners or cleaning products that contain scouring agents. Never use bristle brushes or abrasive sponges that may scratch the surface of the glass.

HARDWARE: To ensure a long lasting finish: wipe off all metal parts after each use with a soft cloth. Do not use abrasive cleaners or cleaning products containing ammonia, bleach or acid. If accidentally used, rinse the surface as soon as possible to prevent damage to the finish (peeling or corrosion). After cleaning the polished finishes, rinse thoroughly and wipe dry with a soft clean-cloth.
Clean stainless steel surfaces at least once a week. When applying stainless steel cleaner or polish to stainless steel hardware, work with the grain (not across the grain). Never use an abrasive sponge or cloth, steel wool or wired brush as these may permanently scratch the surfaces.

NOTE **To maximize the life of your door, it is important to regularly inspect the glass and other hardware for misalignment, proper attachment, and/or damage. Contact DreamLine® with any questions or concerns.**

UNIDOOR PLUS Shower Enclosure (Style I) Maintenance Checklist

☐ Check that the unit is stable, operates smoothly and that the installation is secure.

☐ Confirm that all screws/bolts are tight.

☐ **90° Corner Bracket** vinyl gaskets present to prevent glass-to-metal contact
  ☐ **90° Corner Bracket** set screws are tight

☐ Confirm that all vinyl seals are intact (replace if missing or damaged to prevent water leakage.)

☐ Inspect exposed and concealed glass edges for damage
  ☐ **Damaged Glass Must be Replaced**

☐ Inspect silicone caulk for gaps. Replace silicone as necessary to prevent water leakage.

©2020 DreamLine® All Rights Reserved

Troubleshooting

Problem/Symptom	Suggested Solution	Page
Missing Parts	•Check all shipping/packaging material for missing parts/components. •If not found, contact DreamLine Customer Support [1-866-731-2244] to order factory part replacement.	____
Door Glass does not close flush with the **180º Strike Vinyl (#19)** and **Inline Panel Glass (#11)**	•Check that the **180º Degree Strike Vinyl (#19)** is installed correctly so the Door Glass closes flush with the vinyl; also, check that the reveal of between the door and the strike vinyl is consistent/even. Use a level and adjust the assembly as necessary	27
Top of the **Inline Panel Glass (#11)** and **Return Panel (#26)** is not flush with the top of the Door Glass	•Measure that the height of Door, Inline and Return Panel Glass are at 72 inches (1828.8mm). •Refer to the Door Glass Manual for proper installation of the door.	____
Leakage beneath the **Bottom U-Channel(s) (#29) and/or the Inline (#11)** & **Return (#26) Panel Glass**	•Inspect the silicone and ensure that a complete application of silicone has been applied. Allow 24 hours to cure the silicone before using the shower.	18-21; 24, 26
90º Degree Top Corner Bracket (#30) appears loose and not secured to the glass	•Tighten the **90º Degree Top Corner Bracket (#30)** set screws and ensure the vinyl gaskets are present to prevent glass-to-metal contact.	23



Prior to contacting DreamLine® Customer Service, please have the following information readily available:

- Purchase Order Information
  - Name, PO Number, Dealer/Vendor Name, etc.
- SKU/Model Number (see Page 30)
- Factory Part Information (see Page 30)

©2020 DreamLine® All Rights Reserved

© DreamLine® All Rights Reserved

Factory Parts Information

UNIDOOR PLUS [Style I] - HARDWARE		FACTORY PARTS INFORMATION	
ITEM #	**FACTORY PART NUMBER**	**ITEM DESCRIPTION**	**QTY**
09	0415401-1930 / 0415404-1930 / 0415406-1930 / 0415409-1930	U-Channel 1" Aluminum for 10mm (3/8 in.) Glass	1 pc
13	07552148	Wall Anchor 8mm (5/16 in.)	14 pcs
19	063010100-1829	180 Degree Strike Vinyl for 10mm (3/8 in.) Glass	1 pc
23	092108	ST4.2×40mm Countersunk Screw	14 pcs
28	07550083	PVC Glass Spacer 0.5mm	1 pc
29	0415401-1118 / 0415404-1118 / 0415406-1118 / 0415409-1118	U-Channel 1" Aluminum for 10mm (3/8 in.) Glass	2 pcs
30	07011101	90 Degree Top Corner Bracket for 10mm (3/8 in.) Glass	1 pc

BOLD digit indicates finish: **1** = Chrome; **4** = Brushed Nickel;
6 = Oil Rubbed Bronze: **9**= Satin Black

UNIDOOR PLUS (Style I) - GLASS		FACTORY PARTS INFORMATION	
ITEM #	**FACTORY PART NUMBER**	**ITEM DESCRIPTION**	**QTY**
11	010137095	6-in (147mm) Inline Panel Glass	1 pc
11	010137117	6-1/2-in (160mm) Inline Panel Glass	1 pc
11	010137099	14-in (351mm) Inline Panel Glass	1 pc
11	010137119	14-1/2-in (363mm) Inline Panel Glass	1 pc
11	010137103	22-in (554mm) Inline Panel Glass	1 pc
11	010137121	22-1/2-in (567mm) Inline Panel Glass	1 pc
11/26	010137109	30-in (757mm) Inline/Return Panel Glass	1 pc
11/26	010137123	30-1/2-in (770mm) Inline/Return Panel Glass	1 pc

Contact **Support@DreamLine.com** for Part replacement, installation assistance or additional information.
Complete **Warranty** information is available on **DreamLine.com**.

© 2020 DreamLine® All Rights Reserved

Product SKUs

UNIDOOR PLUS STYLE I ENCLOSURE MODELS

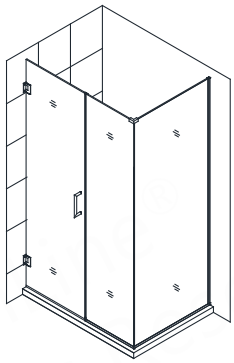

UNIDOOR PLUS STYLE I

Model#s:

SHEN-24290300-##	**SHEN-24370300**	**SHEN-24450300**	**SHEN-24530300**
SHEN-24290340	**SHEN-24370340**	**SHEN-24450340**	**SHEN-24530340**
SHEN-24295300	**SHEN-24375300**	**SHEN-24455300**	**SHEN-24535300**
SHEN-24295340	**SHEN-24375340**	**SHEN-24455340**	**SHEN-24535340**
SHEN-24300300	**SHEN-24380300**	**SHEN-24460300**	**SHEN-24540300**
SHEN-24300340	**SHEN-24380340**	**SHEN-24460340**	**SHEN-24540340**
SHEN-24305300	**SHEN-24385300**	**SHEN-24465300**	**SHEN-24545300**
SHEN-24305340	**SHEN-24385340**	**SHEN-24465340**	**SHEN-24545340**
SHEN-24310300	**SHEN-24390300**	**SHEN-24470300**	**SHEN-24550300**
SHEN-24310340	**SHEN-24390340**	**SHEN-24470340**	**SHEN-24550340**
SHEN-24315300	**SHEN-24395300**	**SHEN-24475300**	**SHEN-24555300**
SHEN-24315340	**SHEN-24395340**	**SHEN-24475340**	**SHEN-24555340**
SHEN-24320300	**SHEN-24400300**	**SHEN-24480300**	**SHEN-24560300**
SHEN-24320340	**SHEN-24400340**	**SHEN-24480340**	**SHEN-24560340**
SHEN-24325300	**SHEN-24405300**	**SHEN-24485300**	**SHEN-24565300**
SHEN-24325340	**SHEN-24405340**	**SHEN-24485340**	**SHEN-24565340**
SHEN-24330300	**SHEN-24410300**	**SHEN-24490300**	**SHEN-24570300**
SHEN-24330340	**SHEN-24410340**	**SHEN-24490340**	**SHEN-24570340**
SHEN-24335300	**SHEN-24415300**	**SHEN-24495300**	**SHEN-24575300**
SHEN-24335340	**SHEN-24415340**	**SHEN-24495340**	**SHEN-24575340**
SHEN-24340300	**SHEN-24420300**	**SHEN-24500300**	**SHEN-24580300**
SHEN-24340340	**SHEN-24420340**	**SHEN-24500340**	**SHEN-24580340**
SHEN-24345300	**SHEN-24425300**	**SHEN-24505300**	**SHEN-24585300**
SHEN-24345340	**SHEN-24425340**	**SHEN-24505340**	**SHEN-24585340**
SHEN-24350300	**SHEN-24430300**	**SHEN-24510300**	**SHEN-24590300**
SHEN-24350340	**SHEN-24430340**	**SHEN-24510340**	**SHEN-24590340**
SHEN-24355300	**SHEN-24435300**	**SHEN-24515300**	**SHEN-24595300**
SHEN-24355340	**SHEN-24435340**	**SHEN-24515340**	**SHEN-24595340**
SHEN-24360300	**SHEN-24440300**	**SHEN-24520300**	**SHEN-24600300**
SHEN-24360340	**SHEN-24440340**	**SHEN-24520340**	**SHEN-24600340**
SHEN-24365300	**SHEN-24445300**	**SHEN-24525300**	**SHEN-24605300**
SHEN-24365340	**SHEN-24445340**	**SHEN-24525340**	**SHEN-24605340**

##=finish
01- Chrome
04- Brushed Nickel
06- Oil Rubbed Bronze
09- Satin Black

©2020 DreamLine® All Rights Reserved

Product SKUs

ADDITIONAL MODEL CONFIGURATIONS for UNIDOOR-X STYLE M3 ENCLOSURE MODELS (with GLASS-TO-GLASS HINGES)

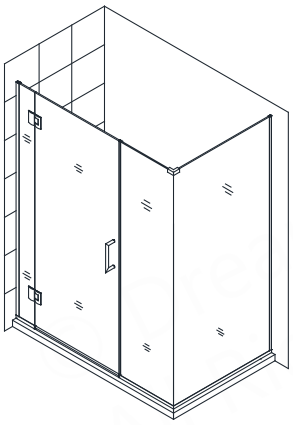

UNIDOOR-X STYLE M3^{6}

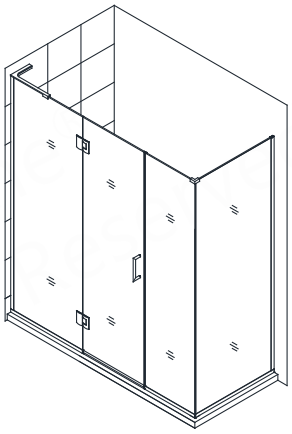

UNIDOOR-X STYLE M3^{24}

Model#s:

E1230630-##
E1230634
E12306530
E12306534
E1233030
E1233034
E12330530
E12330534
E1240630
E1240634
E1243030
E1243034
E1251430
E1251434
E12514530
E12514534
E1261430
E1261434
E12614530
E12614534
E1271430
E1271434
E12714530
E12714534
E1281430
E1281434
E1292230
E1292234
E12922530
E12922534
E1302230
E1302234
E13022530
E13022534
E3270630L
E3270630R
E3270634L
E3270634R
E32706530L
E32706530R
E32706534L
E32706534R
E3280630L
E3280630R
E3280634L
E3280634R
E32806530L
E32806530R
E32806534L
E32806534R
E3290630L
E3290630R
E3290634L
E3290634R
E32906530L
E32906530R
E32906534L
E32906534R
E3300630L
E3300630R
E3300634L
E3300634R

##=finish
01- Chrome
04- Brushed Nickel
06- Oil Rubbed Bronze
09- Satin Black

©2020 DreamLine® All Rights Reserved

NOTES

© DreamLine®
All Rights Reserved

© DreamLine®
All Rights Reserved

©2020 DreamLine® All Rights Reserved

© DreamLine®
All Rights Reserved

DREAMLINE®
dream in style

© DreamLine®
All Rights Reserved

TEL: 866-731-2244
FAX: 866-857-3638
DREAMLINE.COM

For more information on DreamLine® Shower Doors and Enclosures please visit **DreamLine.com**

©2020 DreamLine® All Rights Reserved