OWNER'S MANUAL

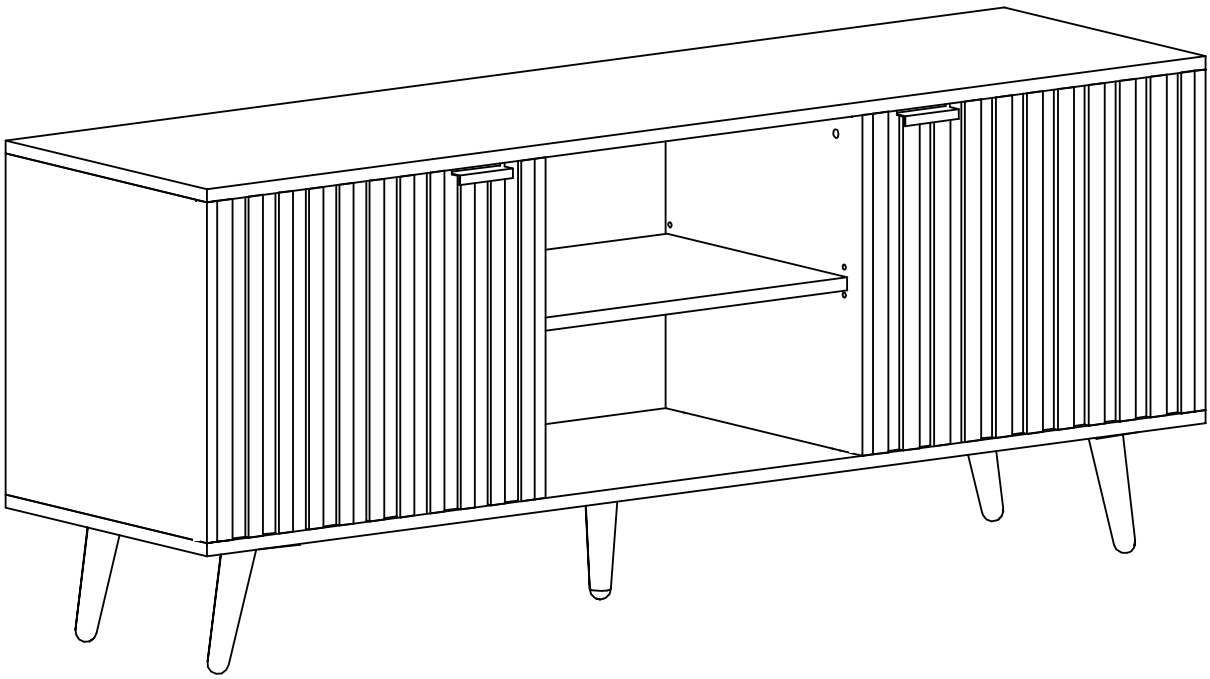

Contact Us

If you have any questions,
Please contact customer service.

Email: service@cozfurn.com

Scan the QR code to watch the installation video.

SCAN
ME!

SAFETY PRECAUTIONS

Before You Start

- Please take the time to carefully read through the whole of these instructions before you commence.
- Unpack, inspect and check off all of the contents.If there are any defective or missing parts after unpacking, please cease assembly and get in contact with us immediately.
- Separate and count all your parts and hardware.
- Have the following tools: Flat Head Screwdriver, #2 Phillips Head Screwdriver and Hammer

WARNING

- Do not stand or sit on the product.
- Children and pets should be kept from your assembly area if possible.Supervise children and pets if they are in the assembly area.
- Never touch with sharp objects or corrosive chemicals, which may damage the surface of the item.
- Do not expose product to direct sunlight or rain; and do not put it in a humid place.

CAUTION

- This item is heavy.Please handle with care.Two or more people are required for this assembly.
- It would be sensible to lay a sheet or blanket on the floor where you intend to work to avoid scratching this product and to protect your floor.
- Assemble the product as close to its intended final position in the room as possible.
- There may be some odour after unpacking the parcel, please put this item in a ventilated place for a few days and the odour will dissipate.
- If using a power drill or power screwdriver for screwing,please be aware of to slow down and stop when screw is tight.
- Failure to do so may result in stripping the screw.

PRODUCT WARRANTY INSTRUCTION

Free Warranty Period:

The free warranty period starts from the product receipt date andasts one year.

Coverage during the Free Warranty Period:

1. If any components of the purchased product are damaged dueto non-human-induced reasons natural wear and tear excludedcorresponding new parts will be replaced free of charge.

2.If the entire purchased product is damaged due to non-human-induced reasons natural wear and tear excluded and cannot befurther used, corresponding parts or a brand-new product will bereplaced free of charge.

Coverage after the Free Warranty Period:

After the warranty period expires, replacement components will beprovided to customers at cost price for continued service.

Additional Services:

After purchasing the product, customers can consult our staff for anyproduct-related inguiries.

Contact Email : Service@cozfurn.com

ACCESSORIES DISPLAY

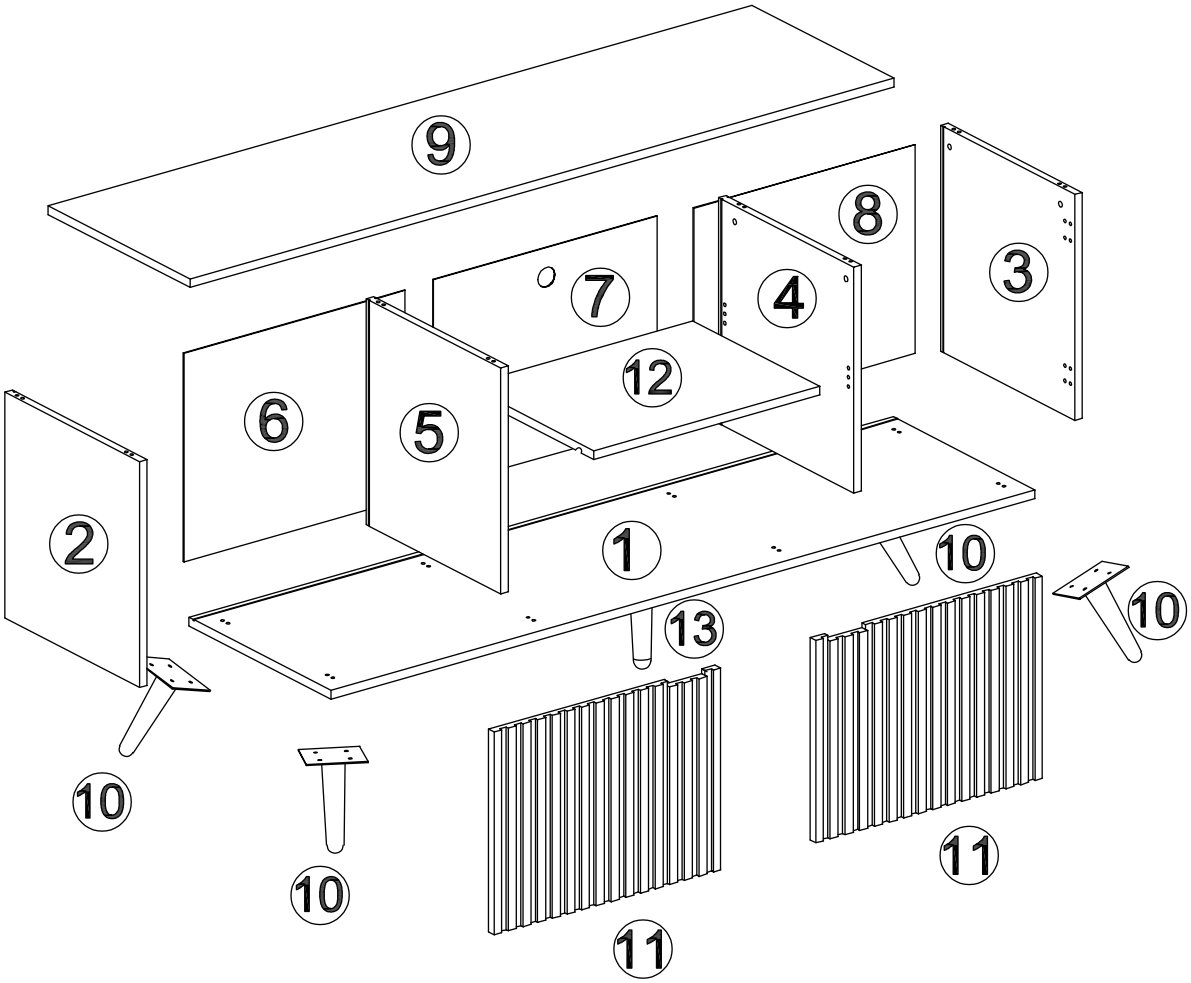

A x8	B x8	C x16	D x8	E x4	F x20
			4x40	3.5x12	4x12

G x8	H x8	I x4	J x4	K x2	L x24
3x14					4x12

PRODUCT ASSEMBLY

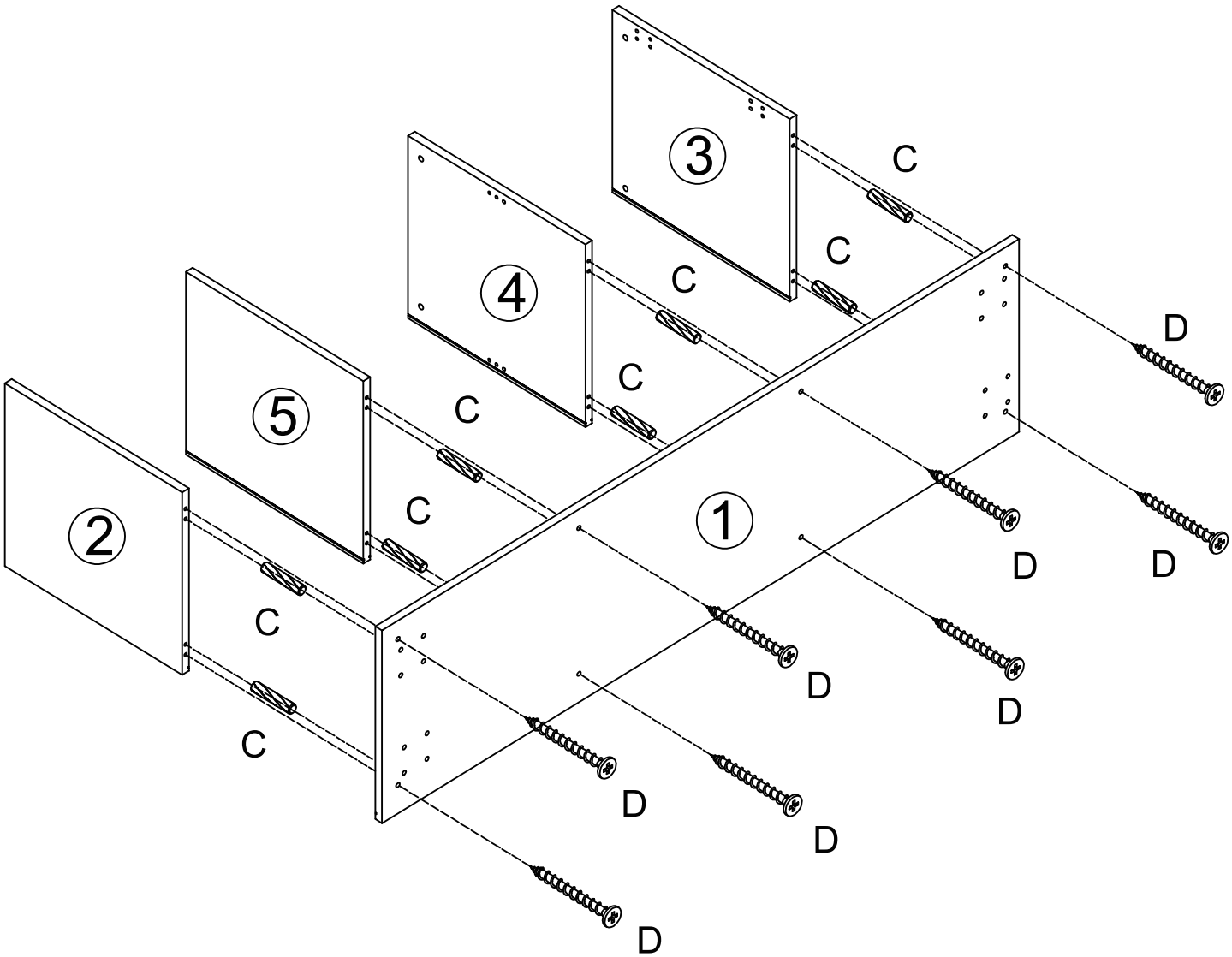

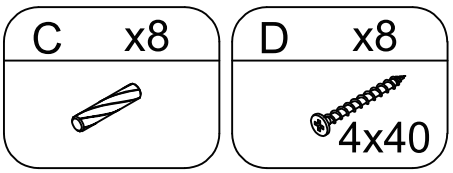

Email:Service@cozfurn.com

PRODUCT ASSEMBLY

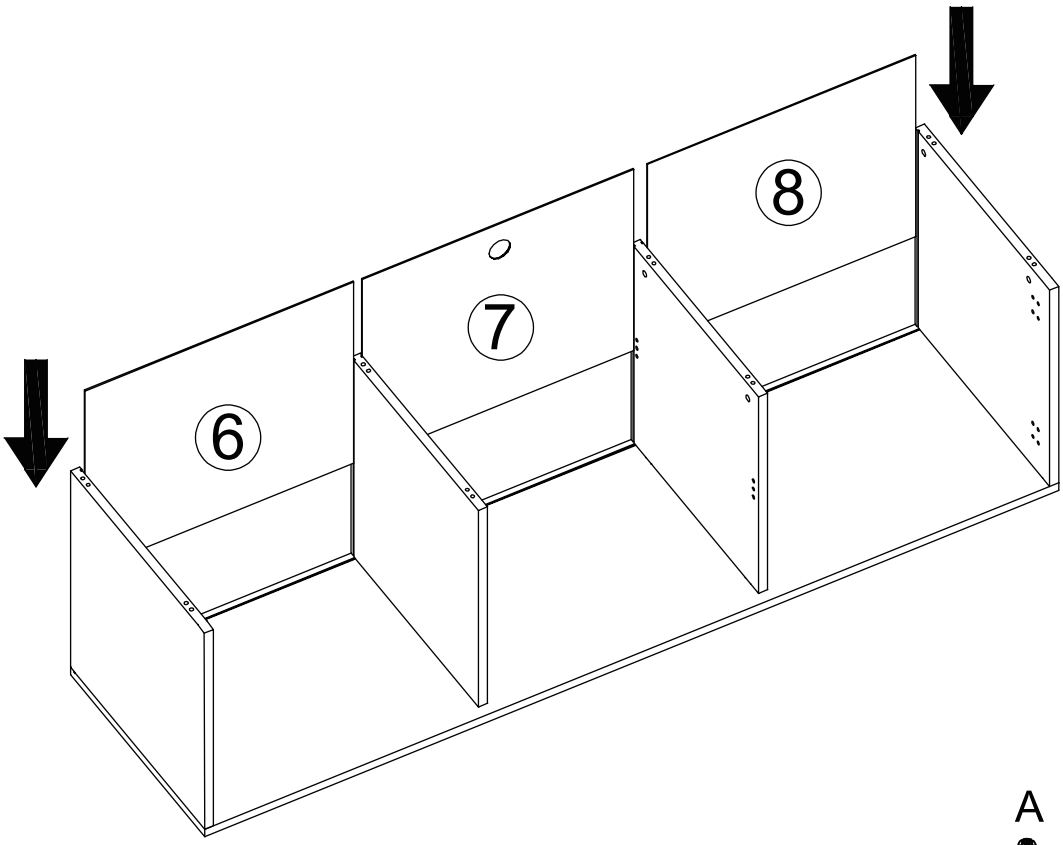

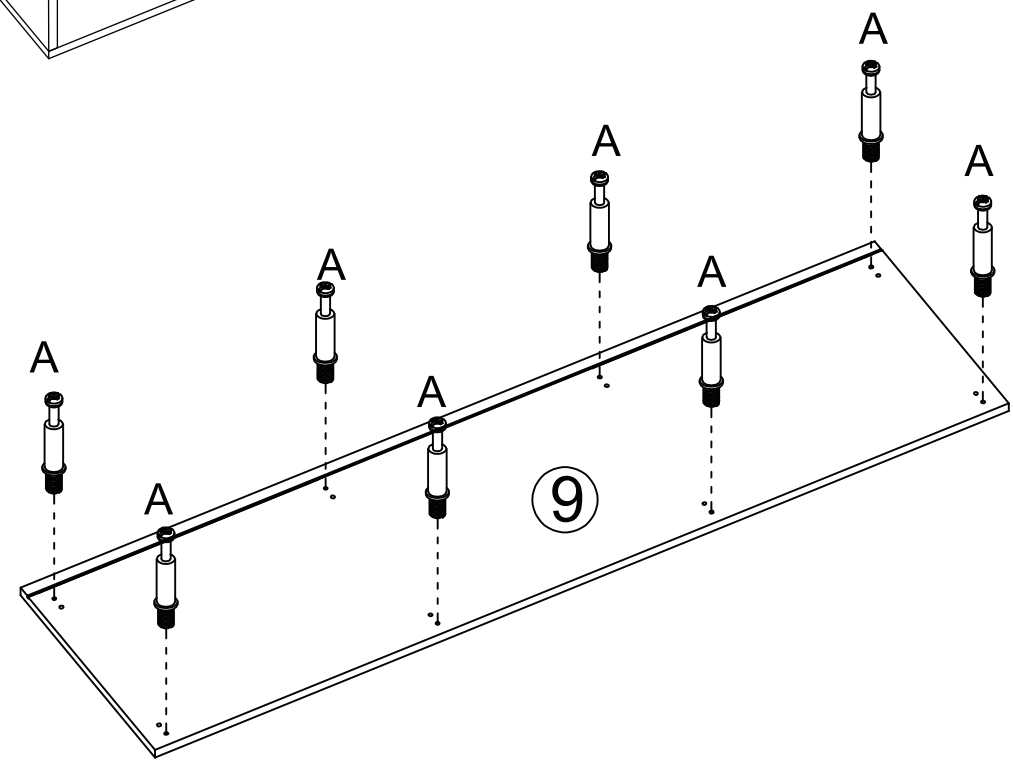

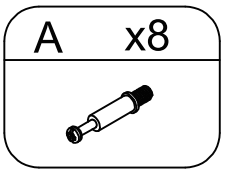

Email:Service@cozfurn.com

PRODUCT ASSEMBLY

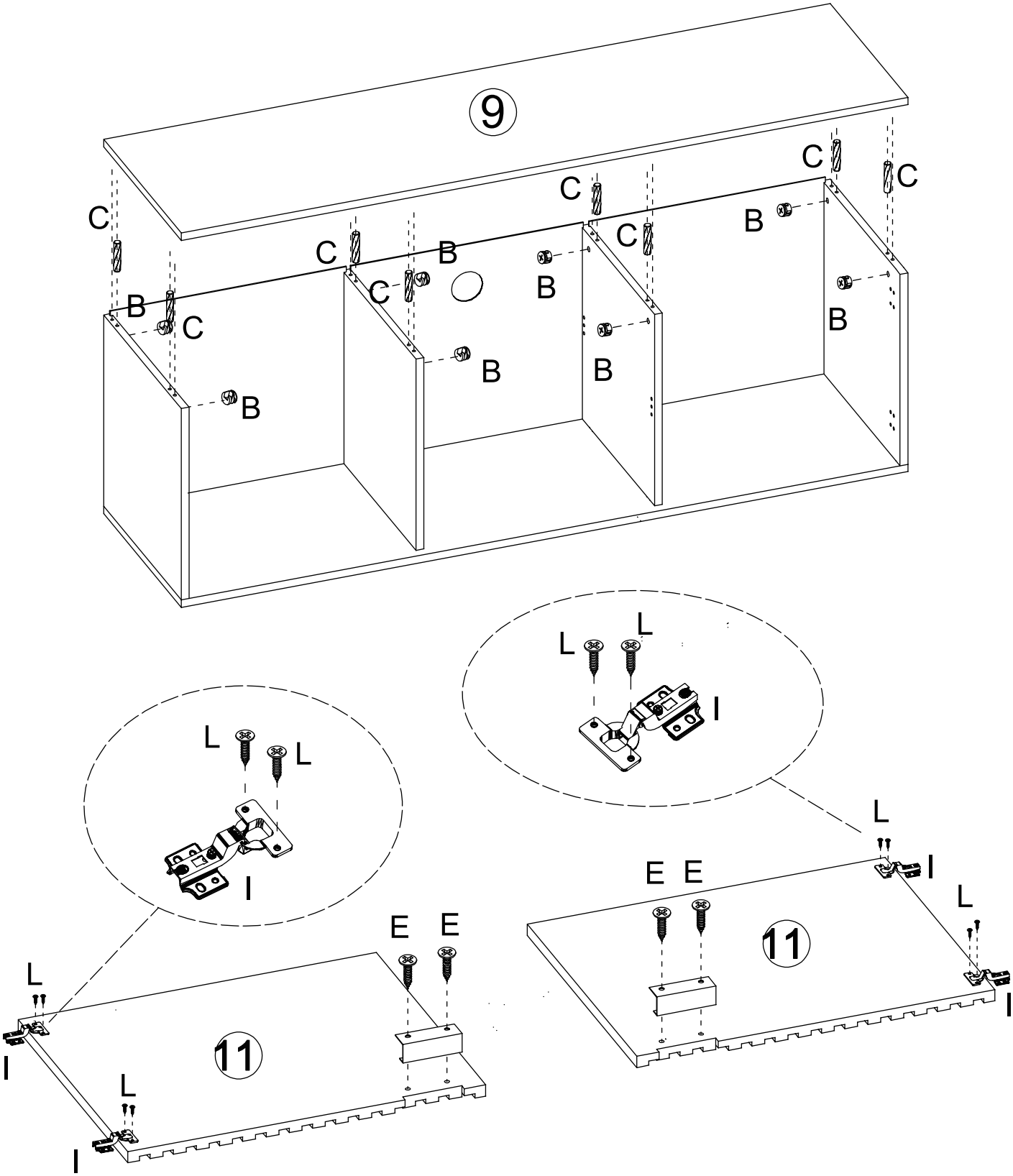

B x8	C x8	E x4	L x8	I x4	K x2
		3.5x12	4x12		

Email:Service@cozfurn.com

PRODUCT ASSEMBLY

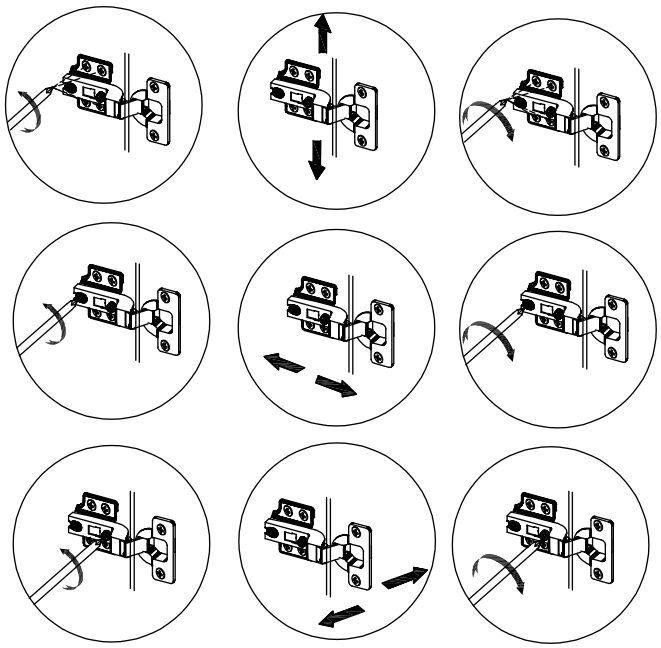

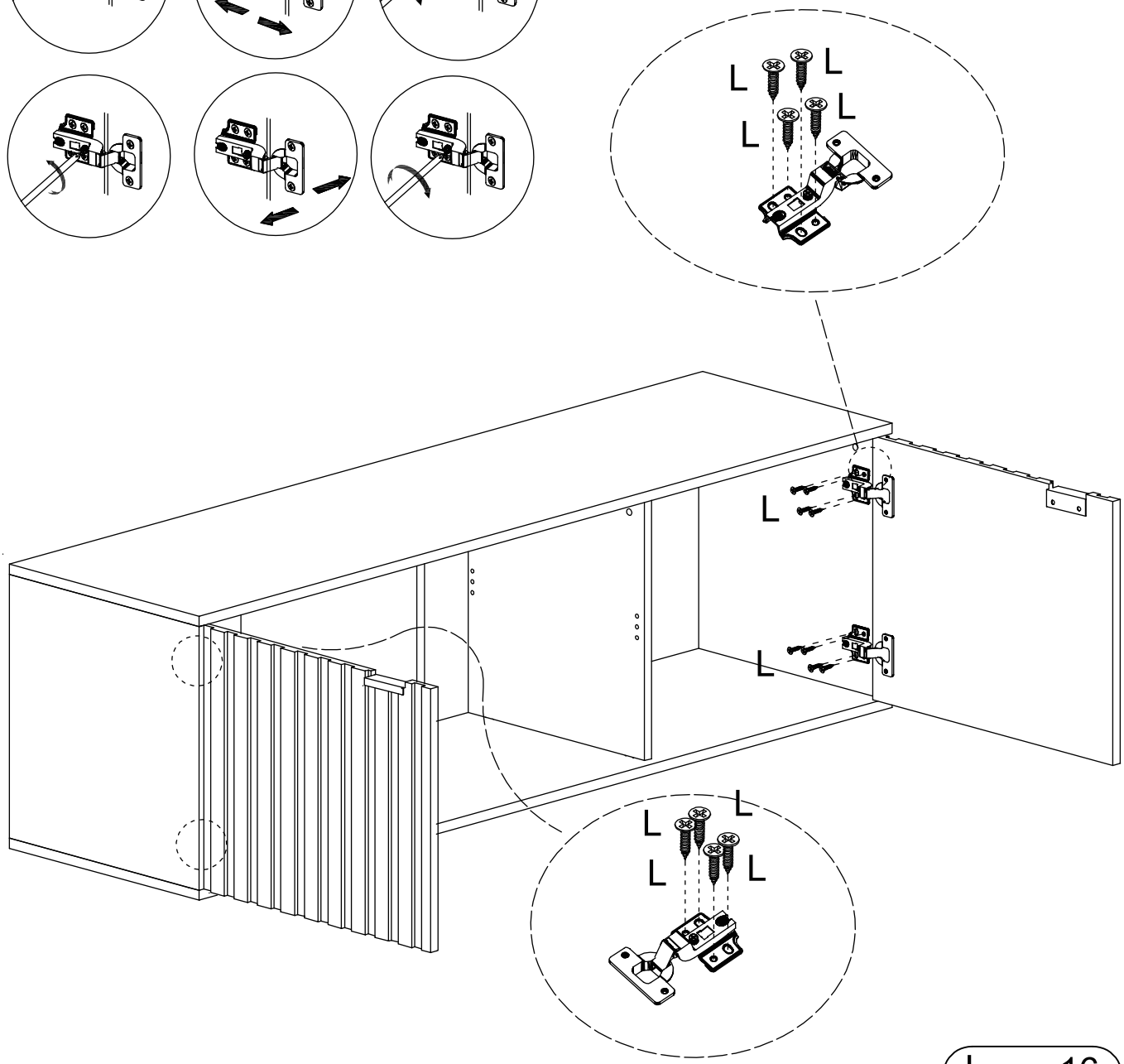

L	x16
	4x12

Email:Service@cozfurn.com

PRODUCT ASSEMBLY

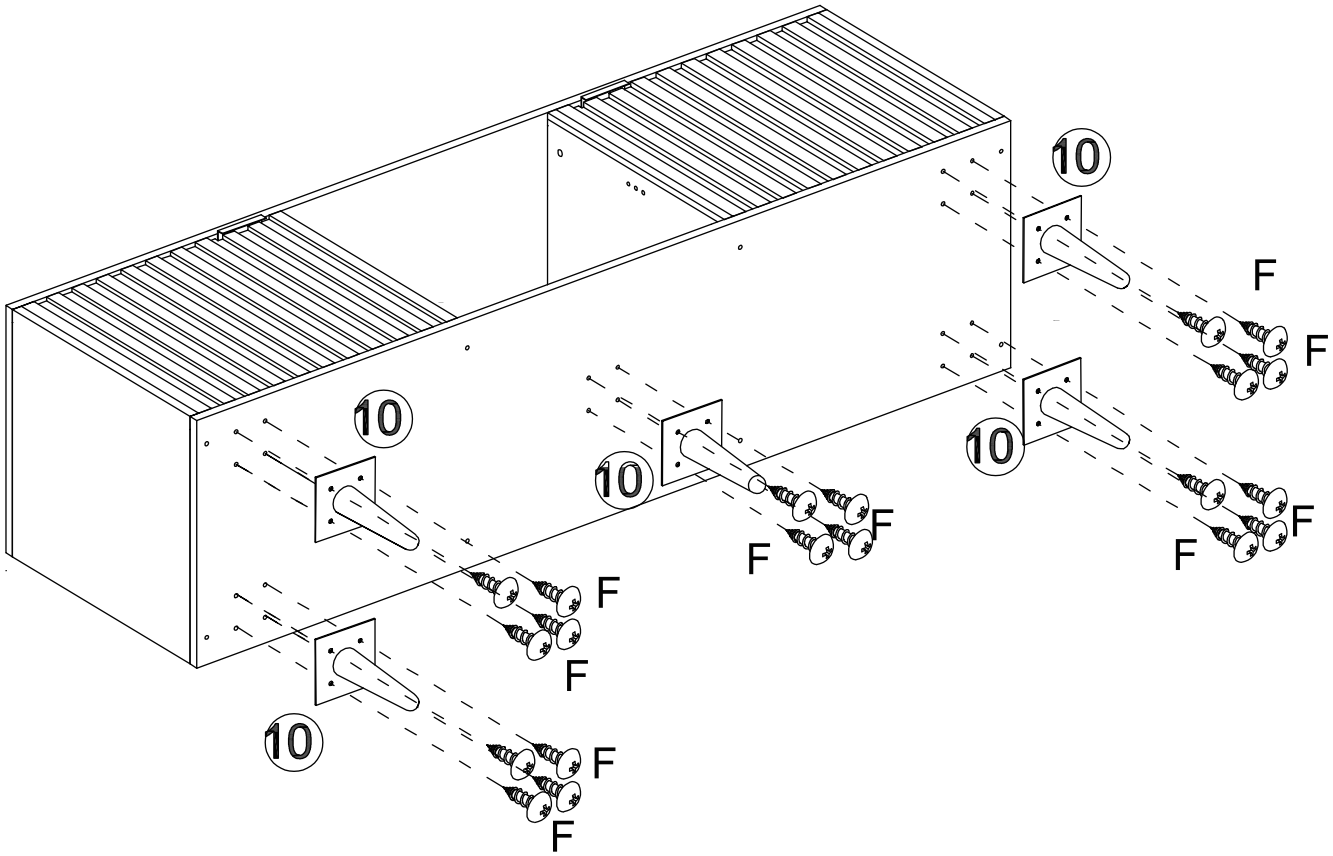

F	x20
	4x12

Email:Service@cozfurn.com

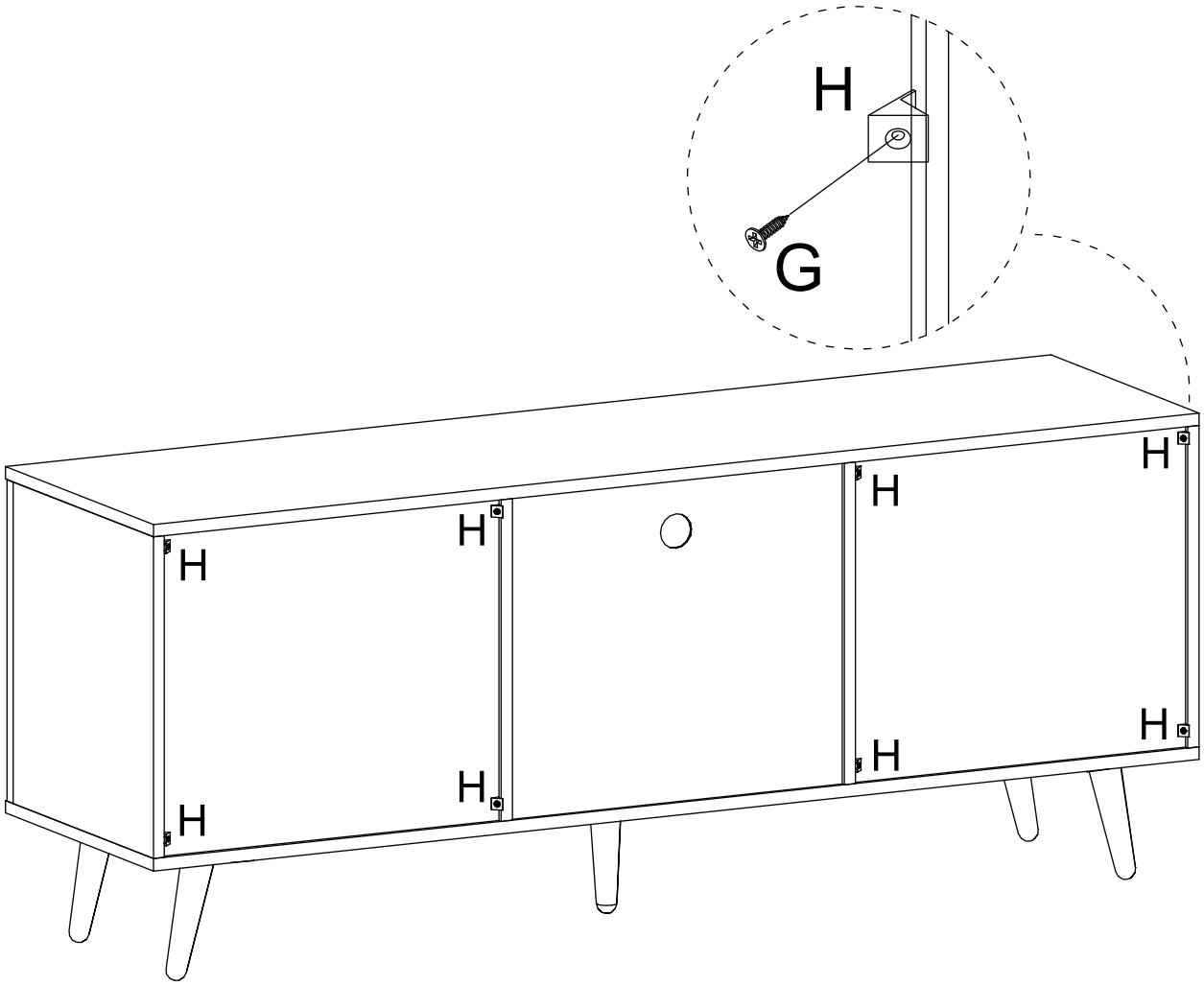

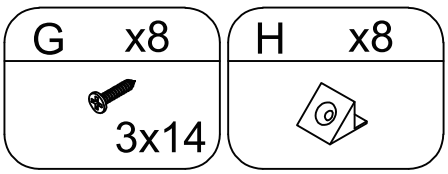

Email:Service@cozfurn.com

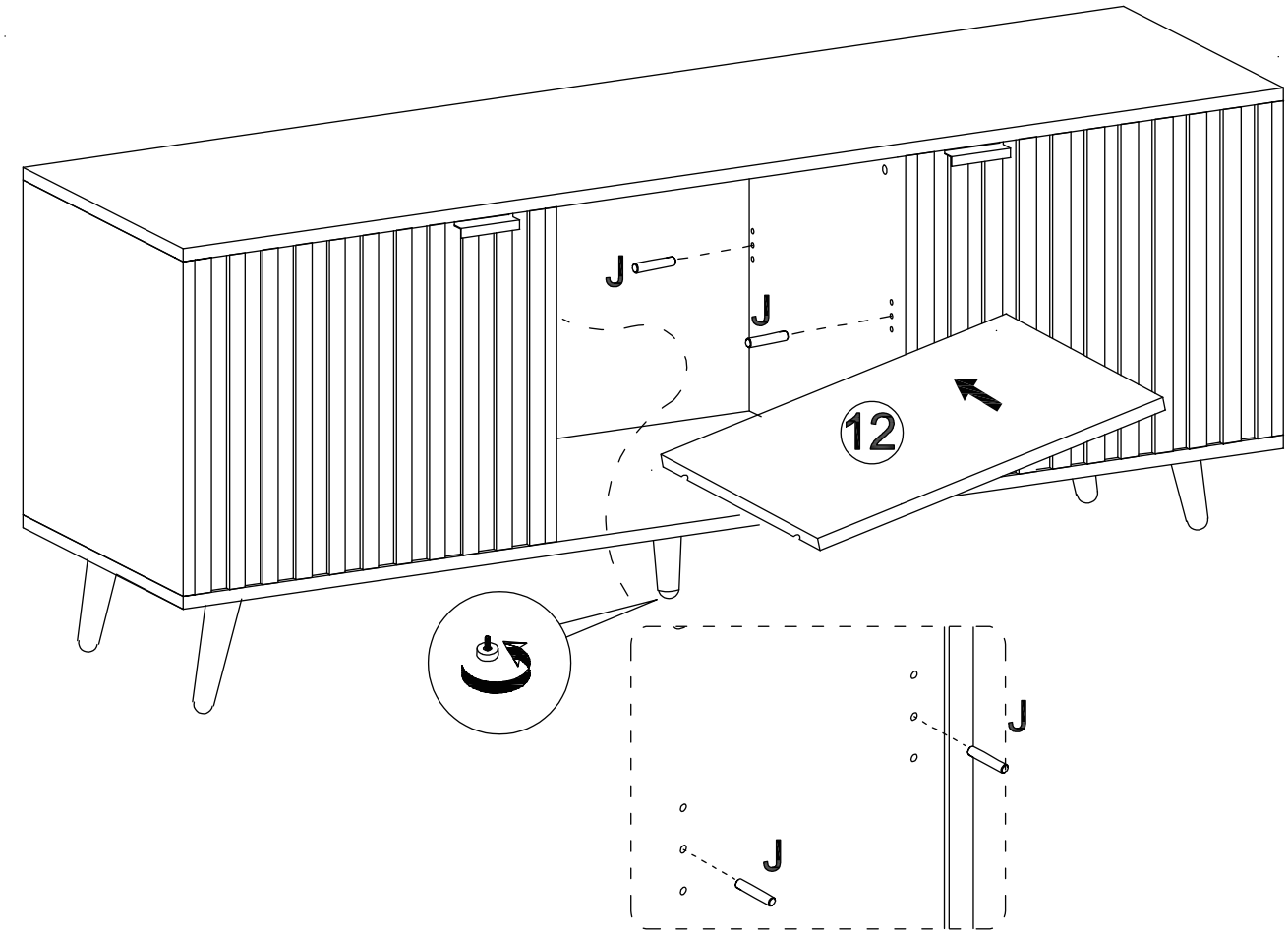

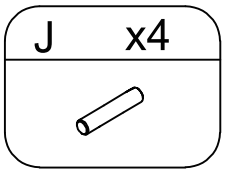

Email:Service@cozfurn.com