GIAGNI

Pompa
Kitchen Faucet
Model PD222

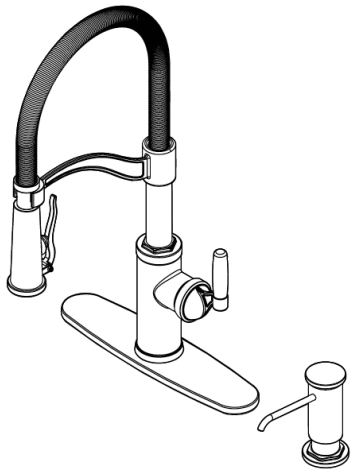

Features
- Ceramic disc cartridge
- Dual-mode sprayer
- Lever style handle
- Integrated supply lines with 3/8” compression connections
- Max flow rate: 1.8 GPM @ 60 PSI
- Optional deck plate included
- Soap dispenser included

Codes/Standards
Specified model meets or exceeds:

- ASME A112.18.1 / CSA B125.1
- NSF 61 Section 9
- IAPMO / UPC listed
- AB1953 low lead
- Watersense approved
- ADA compliance to ANSI A117.1

Installation Notes
- Requires 1-1/4” min to 1-3/4” max hole diameter
- Maximum counter thickness: 1-7/8” (without deck plate or soap dispenser) or 1-1/2” with deck plate.
- Installs in 1, 2, 3, or 4 holes

MODEL	FINISH
PD222-SS	Stainless Steel PVD
PD222-VB	Vintage Bronze

Warranty
Limited Lifetime Warranty. See complete warranty statement for details.

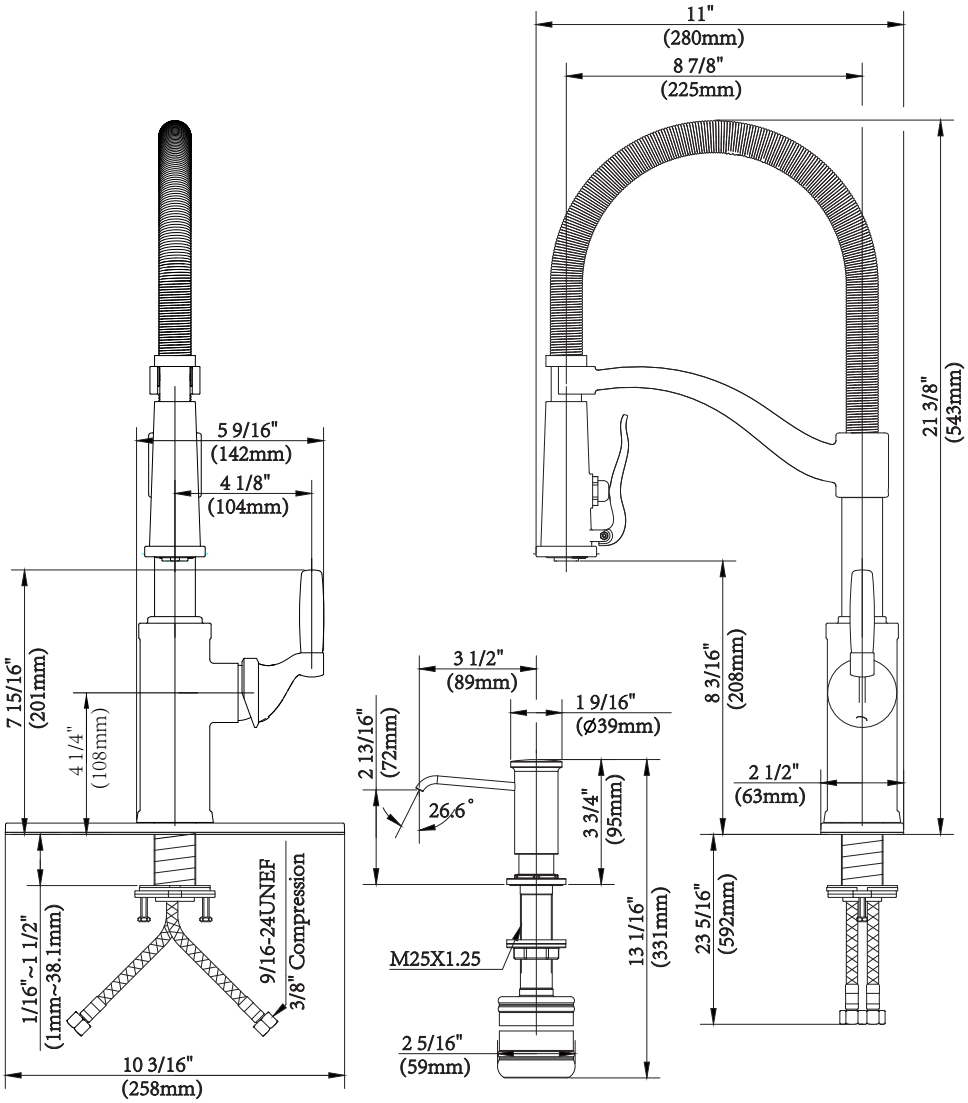

Giagni reserves the right to make specification and pricing changes without notice or obligation, and to change or discontinue models and finishes.

GIAGNI A QMI, Inc Brand
548 South Columbus Avenue • Mount Vernon, New York 10550 • 1-888-560-5222 • www.giagni.com

PD222 (08/1) All rights reserved. © Giagni 2015