Finial® Traditional

24" Towel Bar

K-360

Features

- KOHLER finishes resist corrosion and tarnish.
- Traditional 24- inch bar.
- Coordinates with other products in the Finial Traditional collection.
- 27-3/4" (705 mm) x 3-1/8" (79 mm) x 2-1/16" (52 mm)

Material

- Premium metal construction.

Components

Additional included component/s: Installation hardware.

Codes/Standards

None Applicable

KOHLER® Faucet Lifetime Limited Warranty

See website for detailed warranty information.

Available Color/Finishes

Color tiles intended for reference only.

Color	Code	Description
	CP	Polished Chrome
	SN	Vibrant® Polished Nickel
	AF	Vibrant® French Gold
	BN	Vibrant® Brushed Nickel
	BV	Vibrant® Brushed Bronze
	2BZ	Oil-Rubbed Bronze

Finial® Traditional

24" Towel Bar

K-360

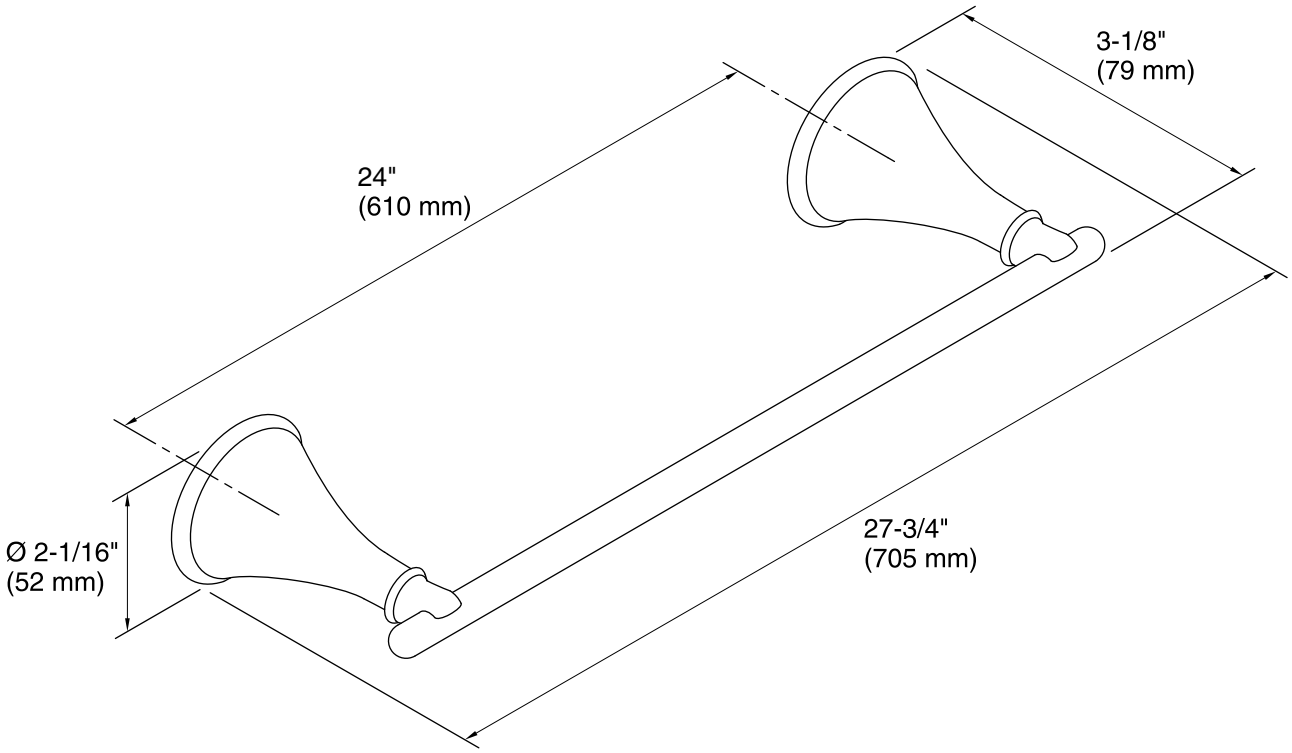

Technical Information

All product dimensions are nominal.

Notes

Install this product according to the installation guide.

CAUTION: Risk of personal injury. Do not install these products in any area where they are likely to be used inadvertently as a grab bar or support bar. These products are not designed or intended for use as a grab bar or support bar.