INSTALLATION MANUAL

LEFT-HAND SWING

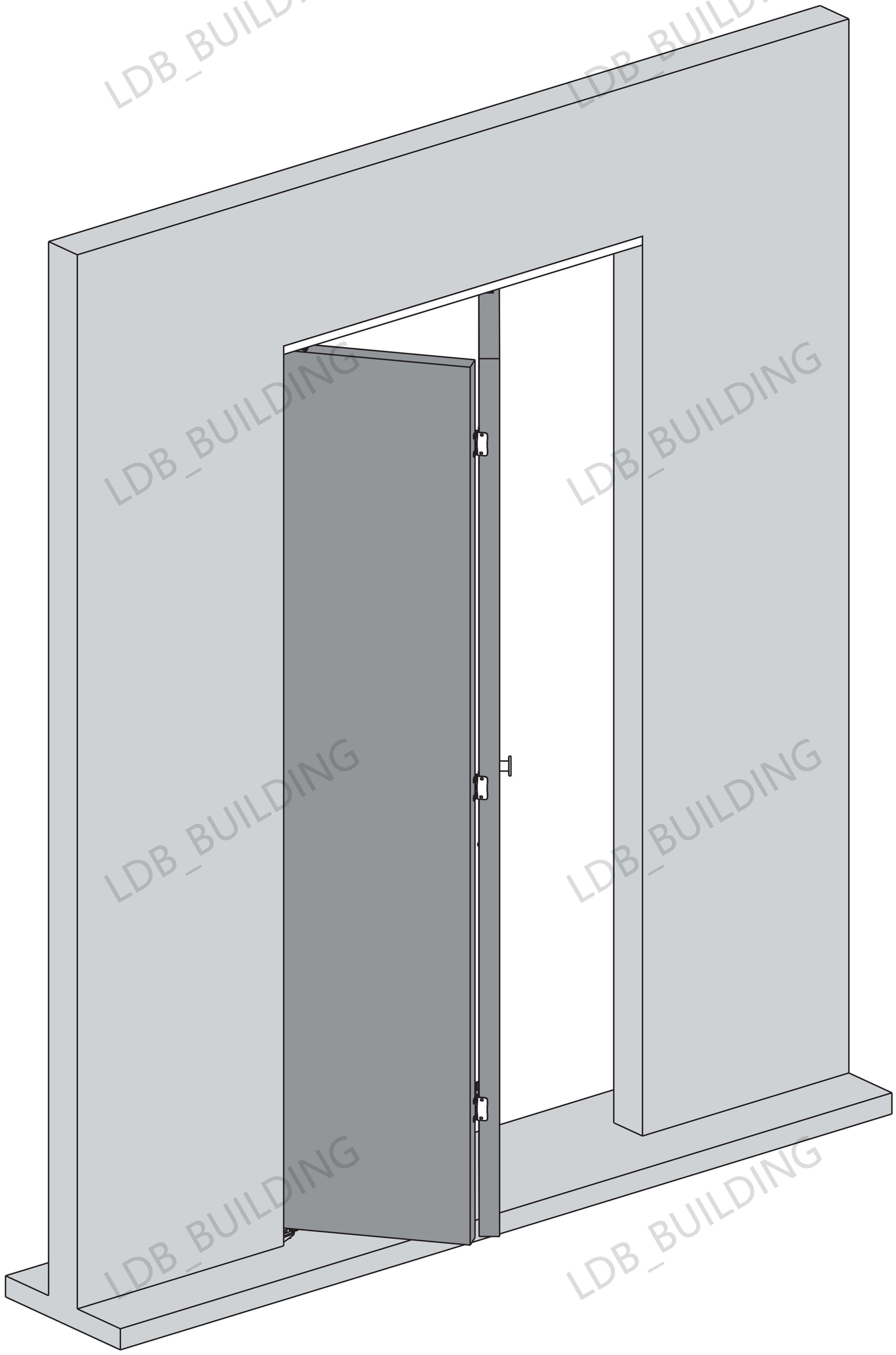

⚠ ***CAUTIONS:***

*Please read this manual carefully before installation.

*The manual takes the LEFT-HAND as an example.

If you choose RIGHT-HAND, please install all parts in the opposite direction.

(Note: when installing the hinges, ensure the black plastic points towards the fixed door)

LDB_BUILDING

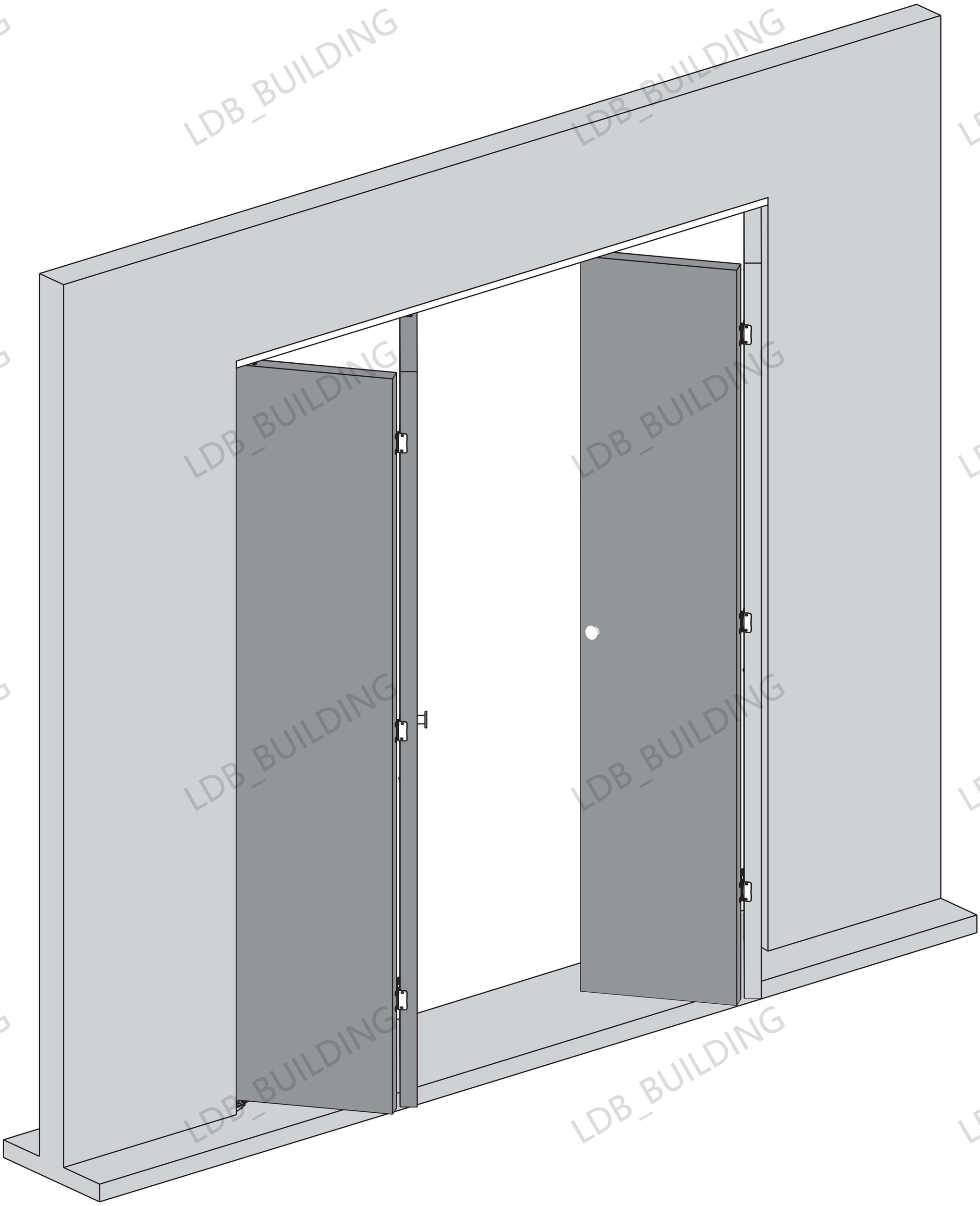

LDB_BUILDING

Hardware

A Top track x 1

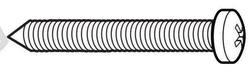

ST4.2x32

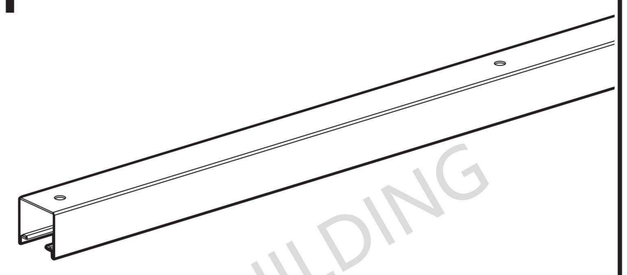

Track Length	Screw Quantity
$23\frac{13}{16}$"	(x4)
$27\frac{27}{32}$"	(x4)
$29\frac{27}{32}$"	(x4)
$31\frac{27}{32}$"	(x5)
$35\frac{53}{64}$"	(x5)

B Track pivot bracket

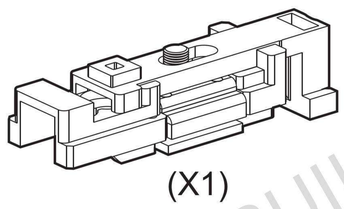

(X1)

C Door stopper

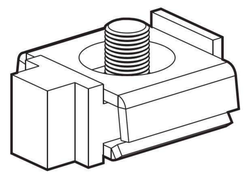

(X1)

D Fixed door top pivot

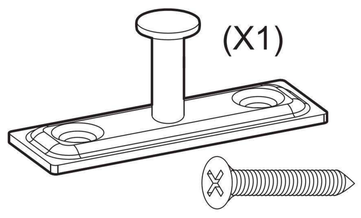

(X1)

ST4.2X25(X2)

E Active door guide pivot

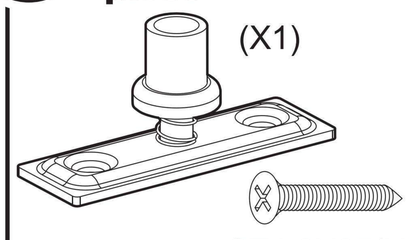

(X1)

ST4.2X25(X2)

F Hinge

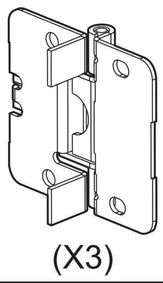

(X3)

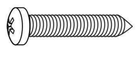

ST4.2X16
(X12)

G Knob

(X1)

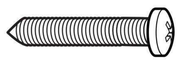

ST4.2x32(x1)

H Bottom fixed bracket

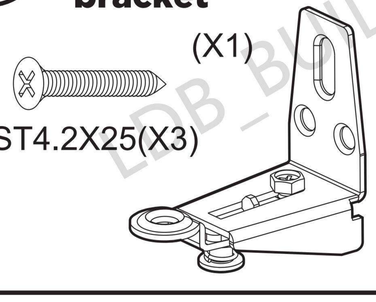

(X1)

ST4.2X25(X3)

I Bottom fixed door pivot

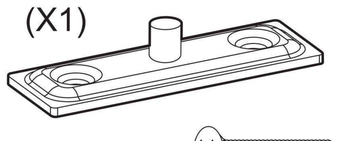

(X1)

ST4.2X25(X2)

J Panel aligner

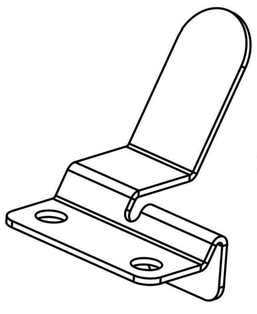

(X1)

ST4.2X16
(X2)

K Fascia

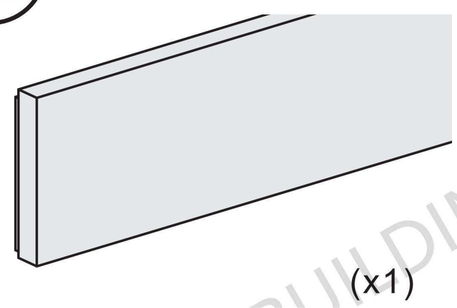

(x1)

Wrench

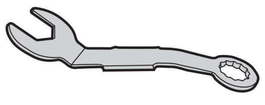

Have any questions or issues? Reach out to us with **PO#**

Email: help@bestbarndoor.com

Tools required

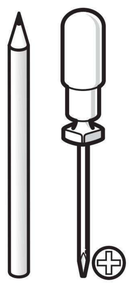

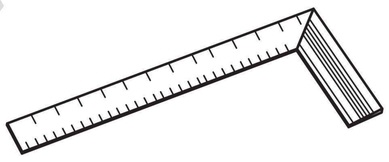

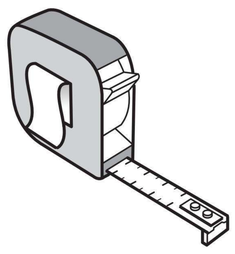

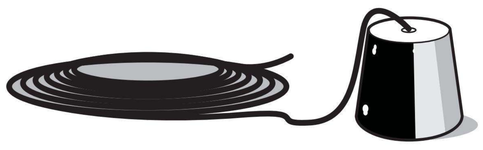

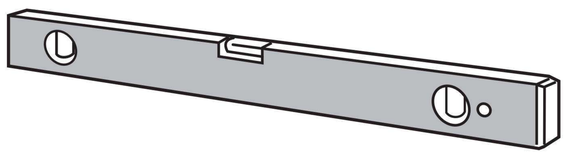

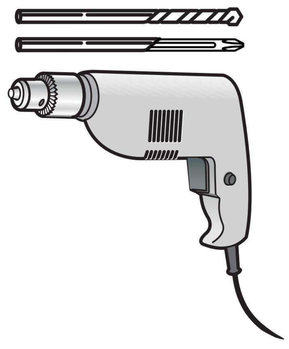

LDB_BUILDING

Assembly Notes

2 X PANEL

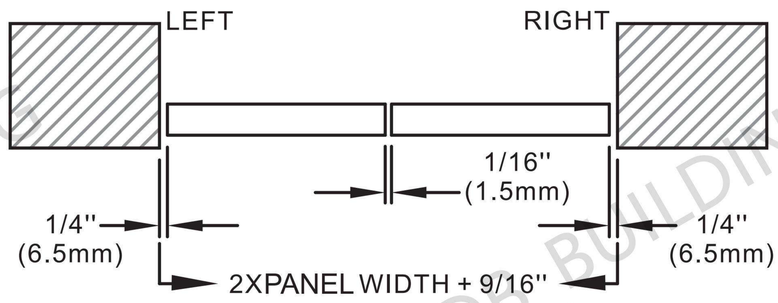

LEFT HAND SWING

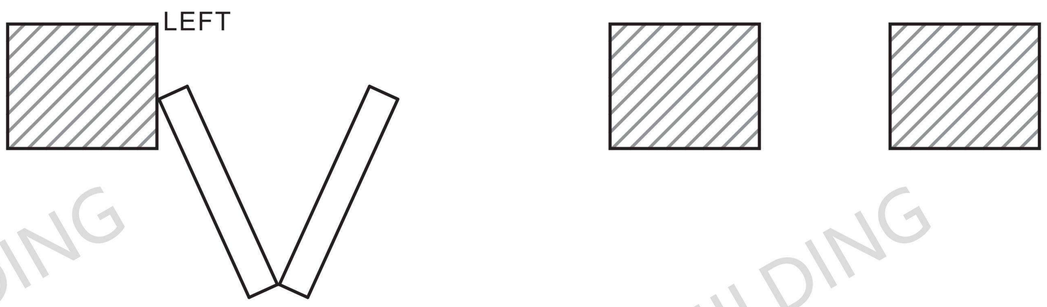

RIGHT HAND SWING

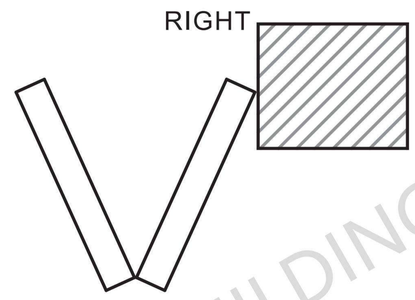

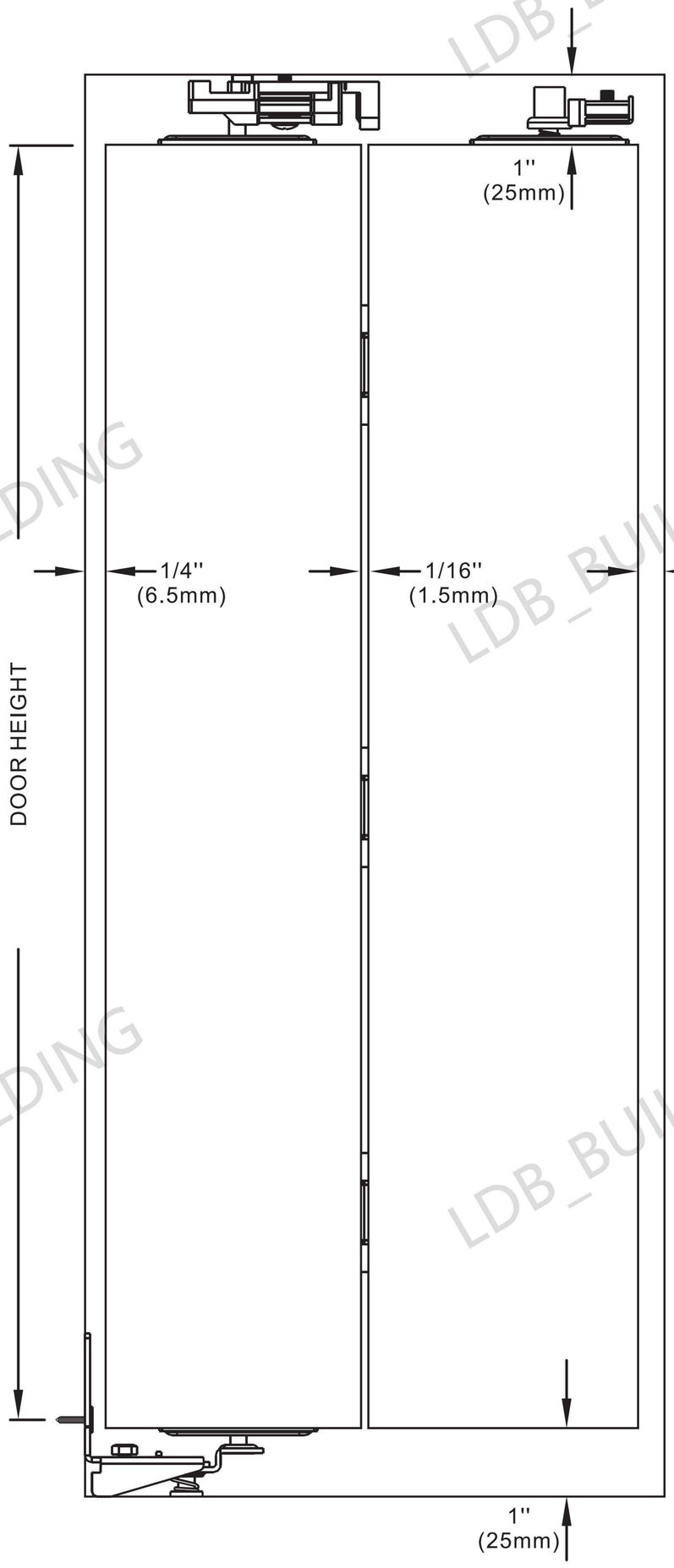

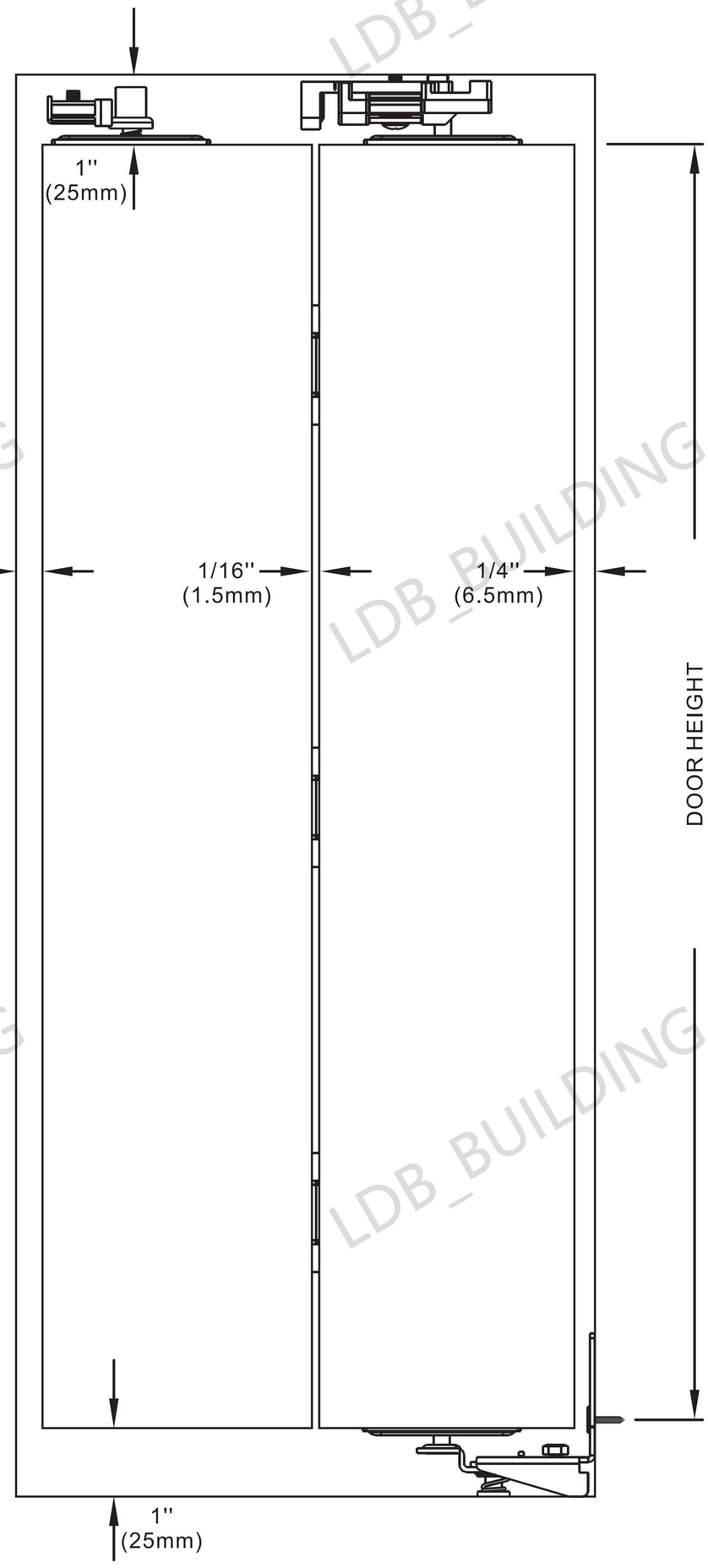

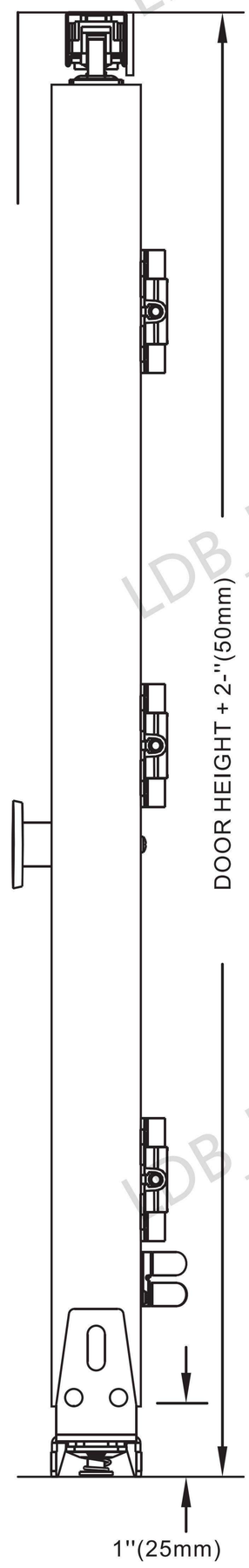

4 X PANEL

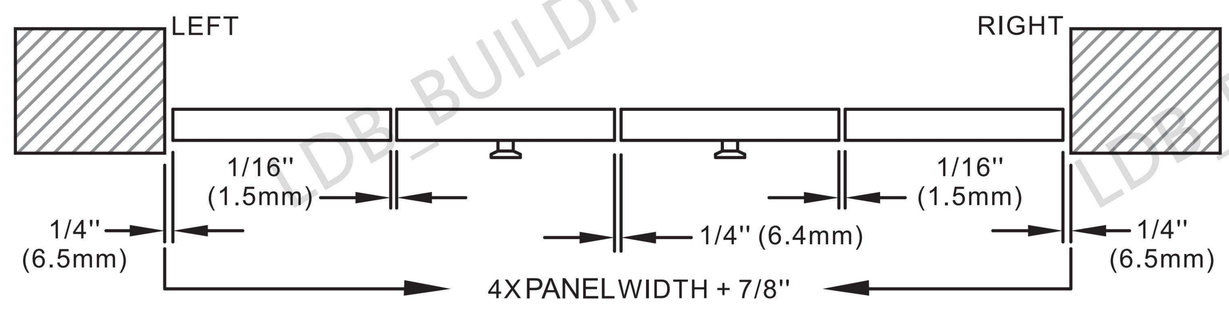
LEFT
RIGHT
1/16"
(1.5mm)
1/16"
(1.5mm)
1/4"
(6.5mm)
1/4" (6.4mm)
1/4"
(6.5mm)
4X PANEL WIDTH + 7/8"

LEFT
RIGHT

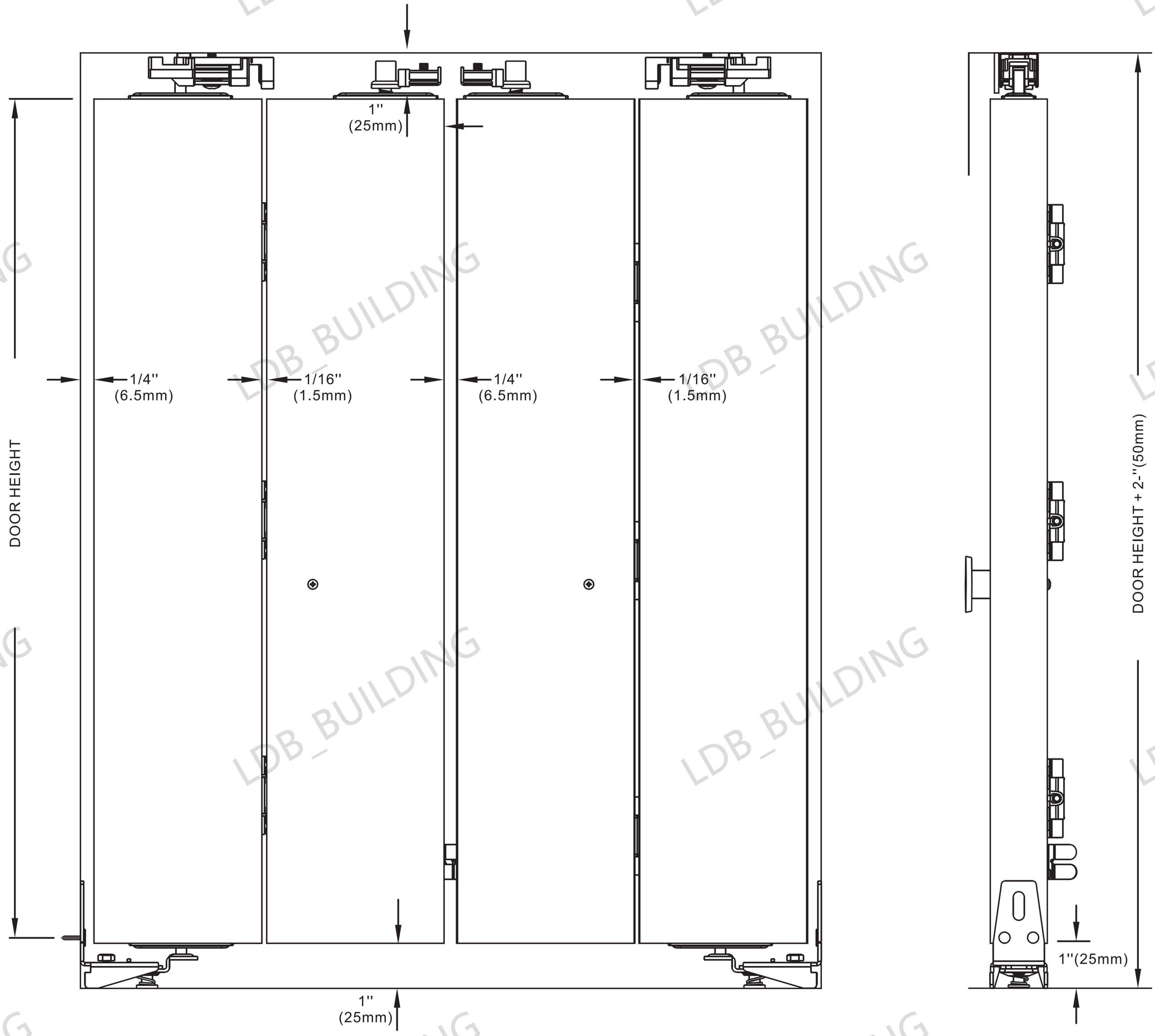
1"
(25mm)
1/4"
(6.5mm)
1/16"
(1.5mm)
1/4"
(6.5mm)
1/16"
(1.5mm)
DOOR HEIGHT
DOOR HEIGHT + 2-"(50mm)
1"(25mm)
1"
(25mm)

Product Installation

Step 1 Draw Center Lines

Installation requirement: Distance >= 1-3/16″(30mm)

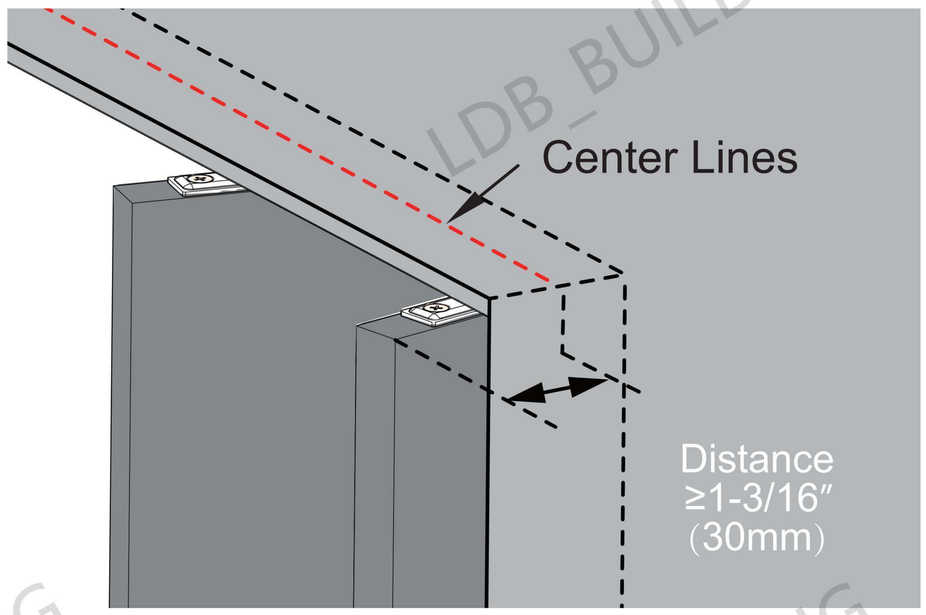

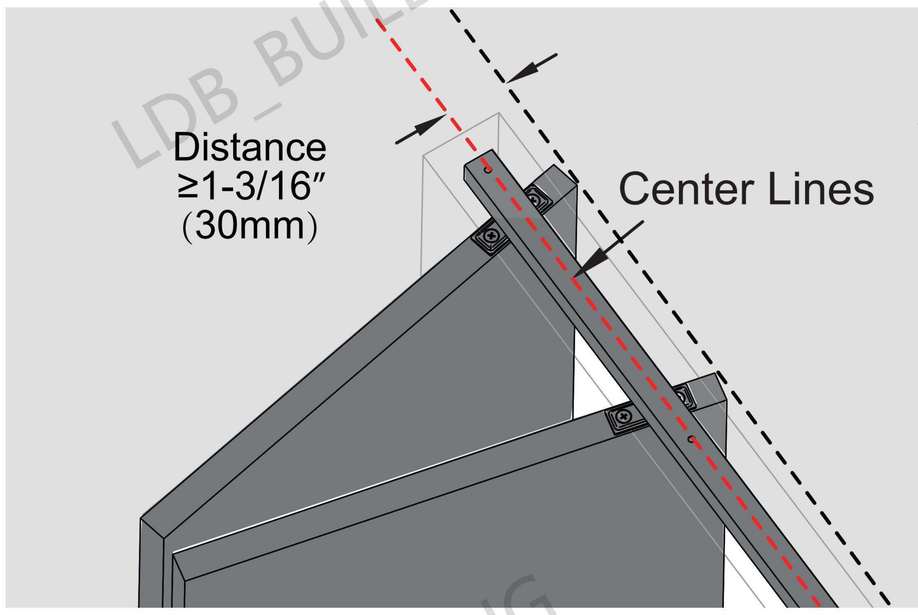

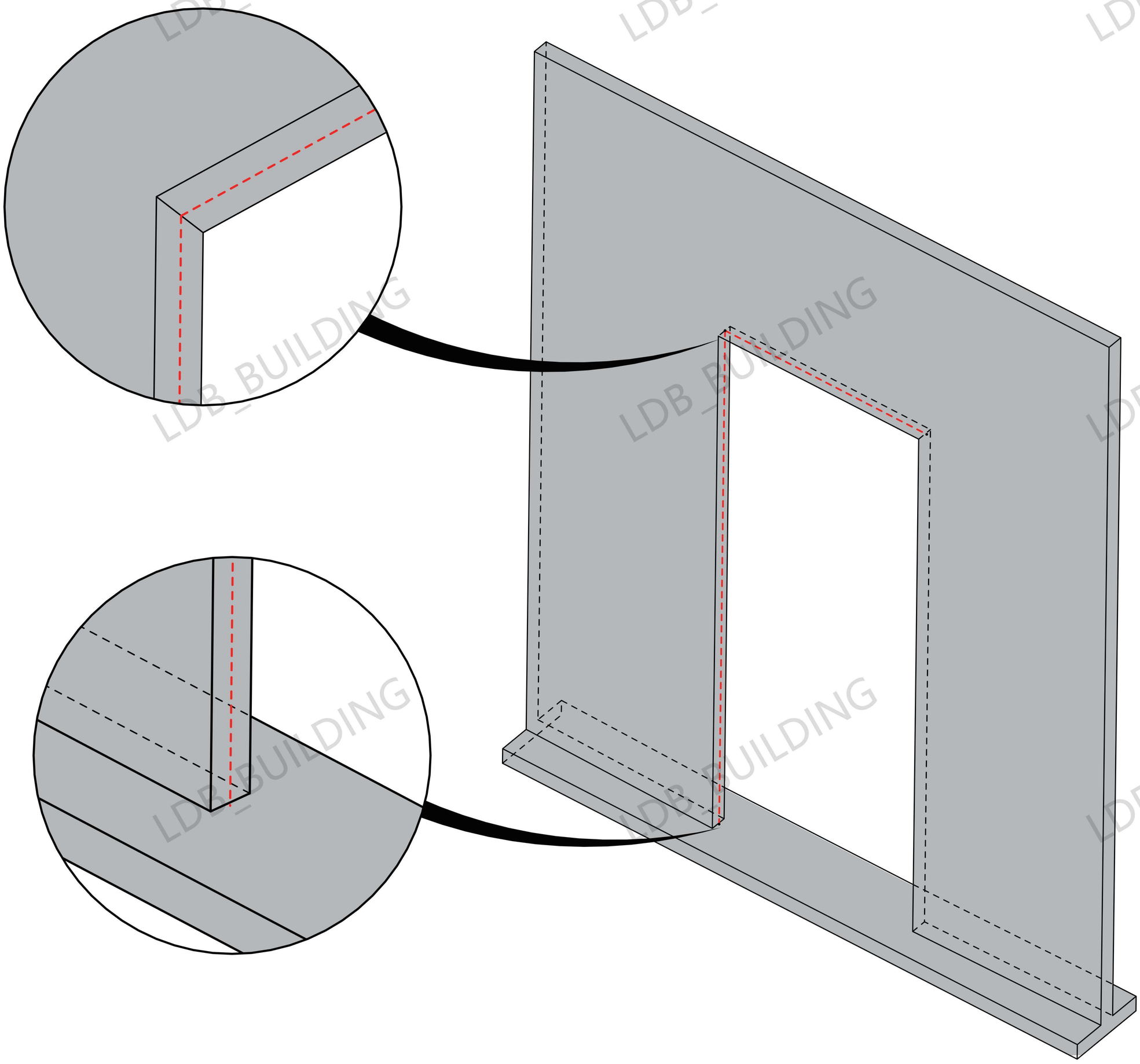

Product Installation

Step 2 Mount Top Track(A)

2.1

Please check unlocked & locked status of Track pivot bracket(B) as illustrated below:

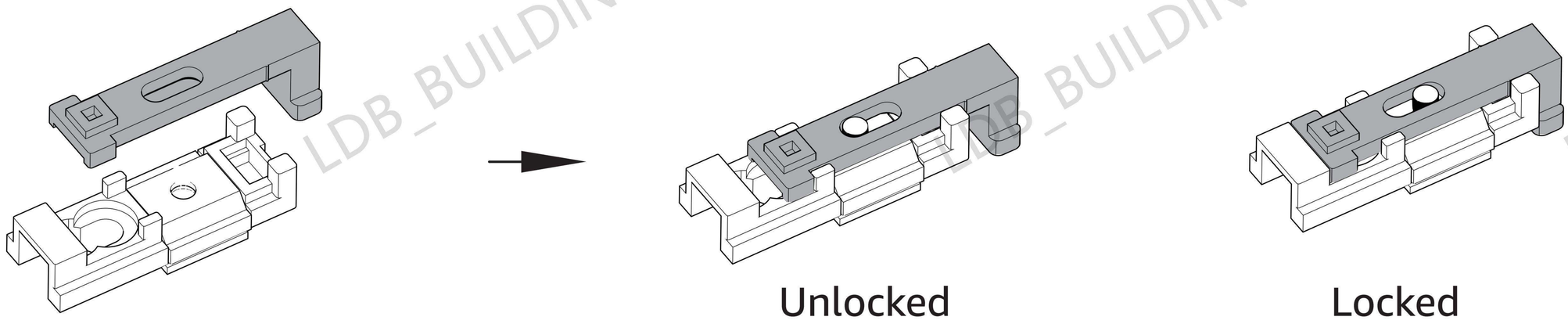

2.2

Insert Track pivot bracket(B) and Door stopper(C) into the Top track(A).

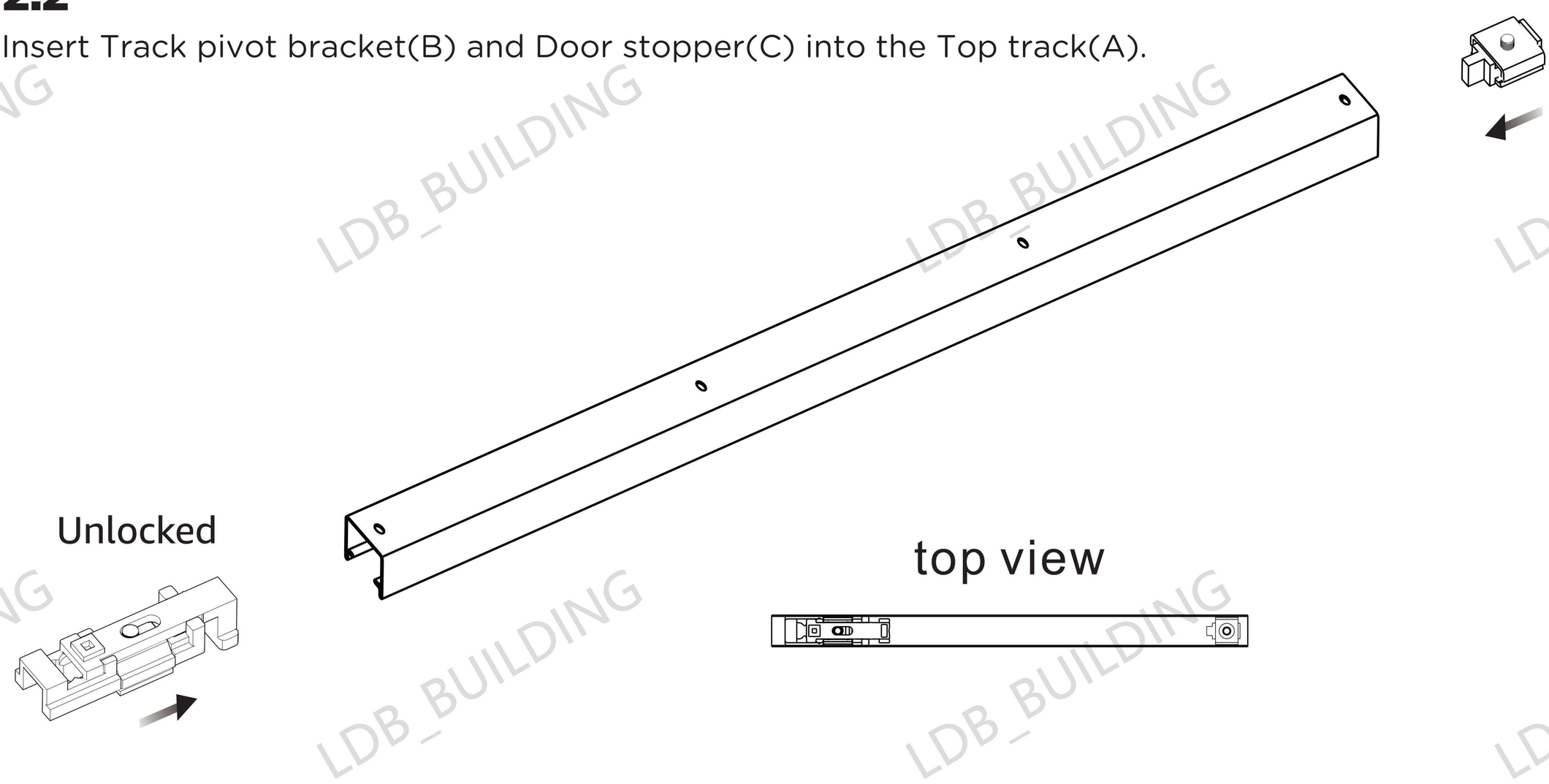

2.3

Screw in the track screws.
Tips: Secure the screws in the center first, then both sides.

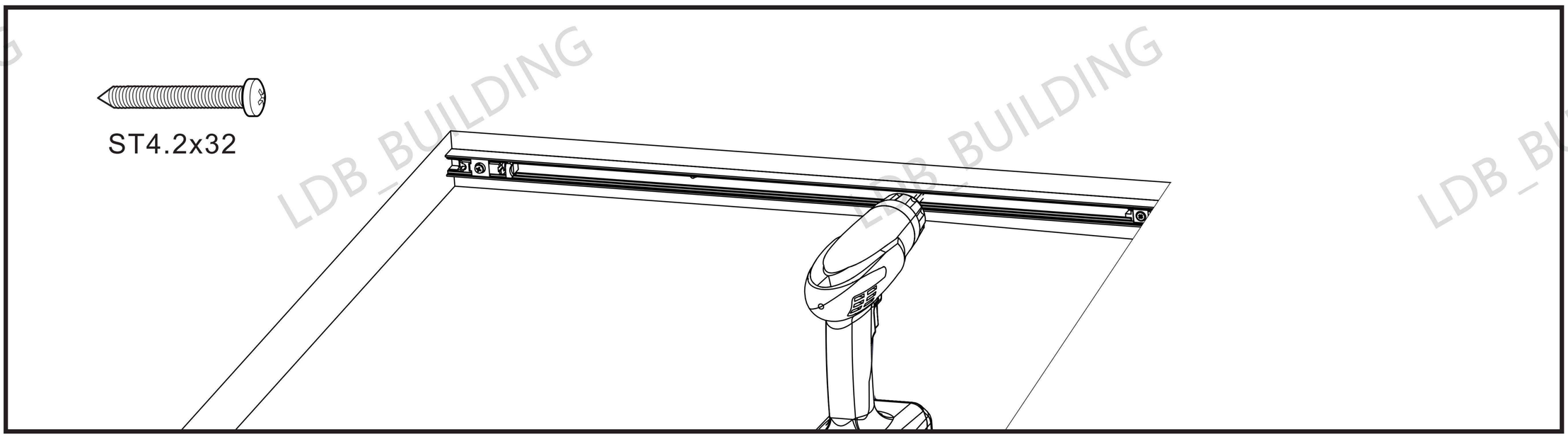

Product Installation

Step 3 Mount Bottom fixed bracket(H)

Align Bottom fixed bracket(H) with the centerline of the door frame, drill holes and screw in.

ST4.2x25

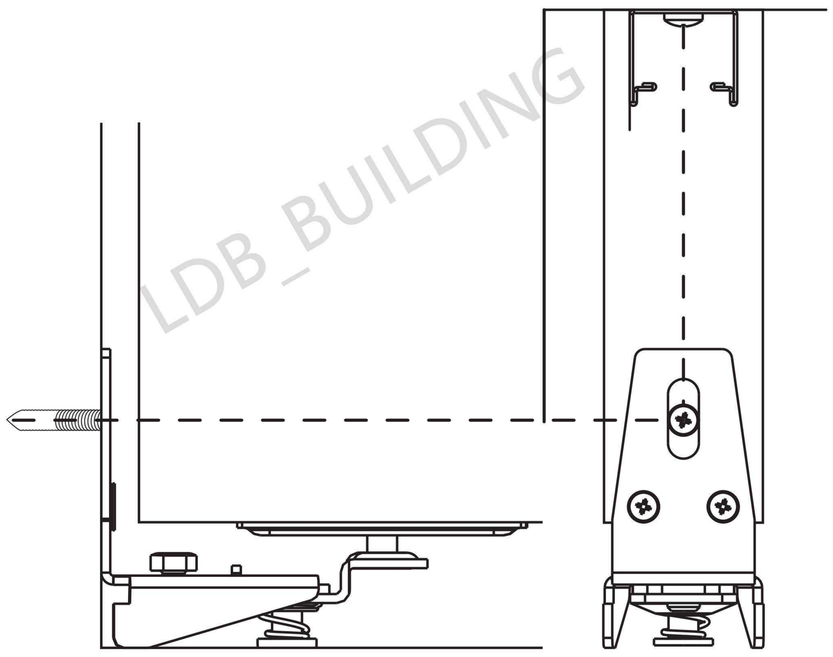

Step 4 Attach Hinges(F)

⚠ ***IMPORTANT:***

**** MAKE SURE THE BLACK PLASTIC points towards FIXED DOOR AS ILLUSTRATED BELOW***

**** 1/16"(1.5mm) gap required between the two panels***

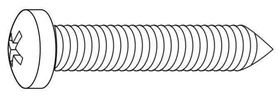

ST4.2x16

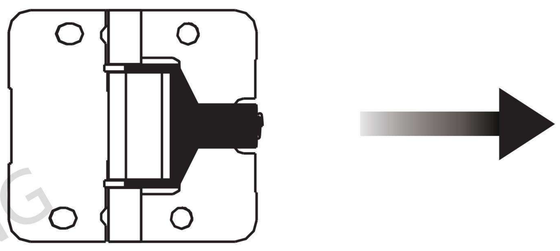

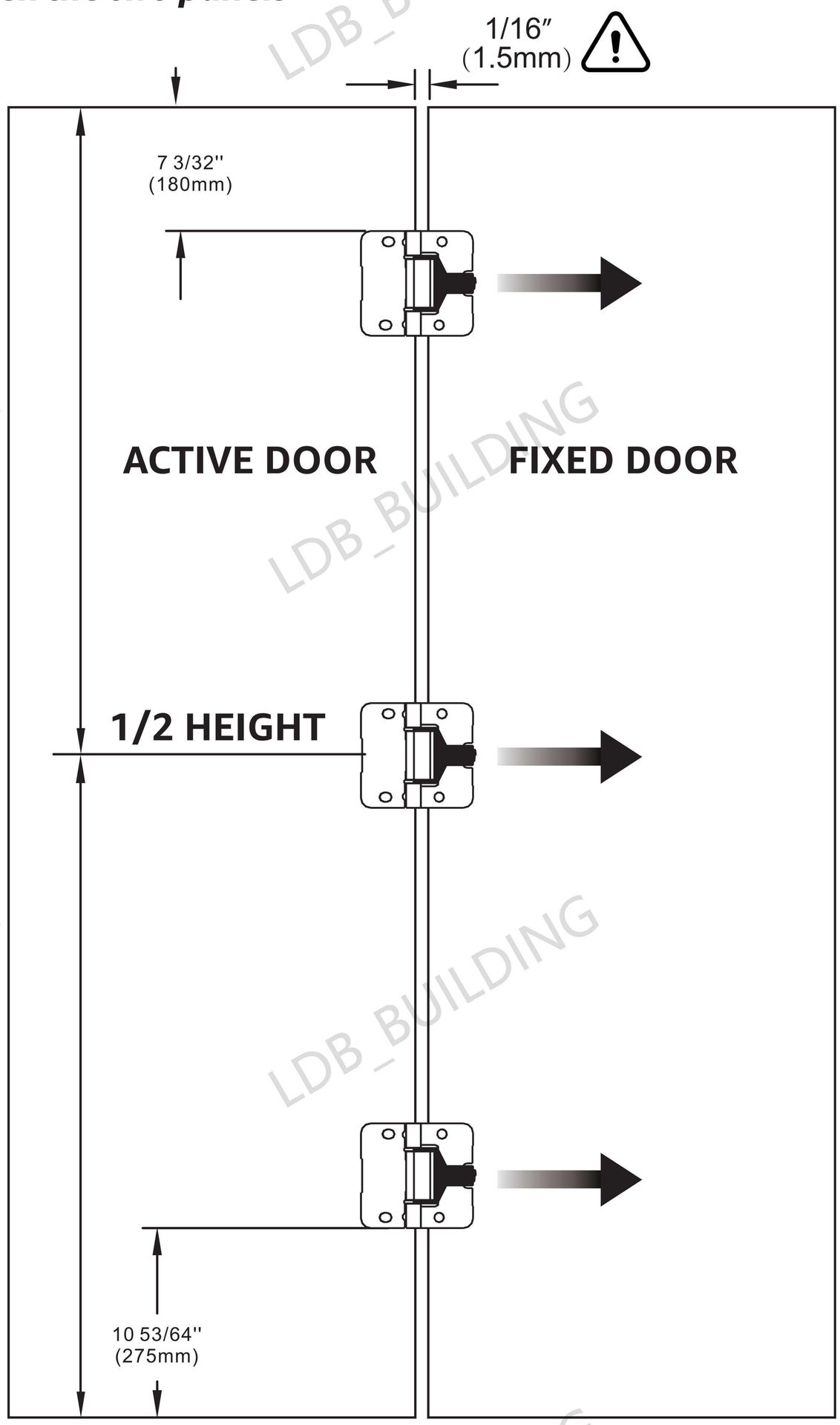

Product Installation

Step 5 Screw in all Pivots (D) (E) (I)

Secure the screws into the predrill holes.

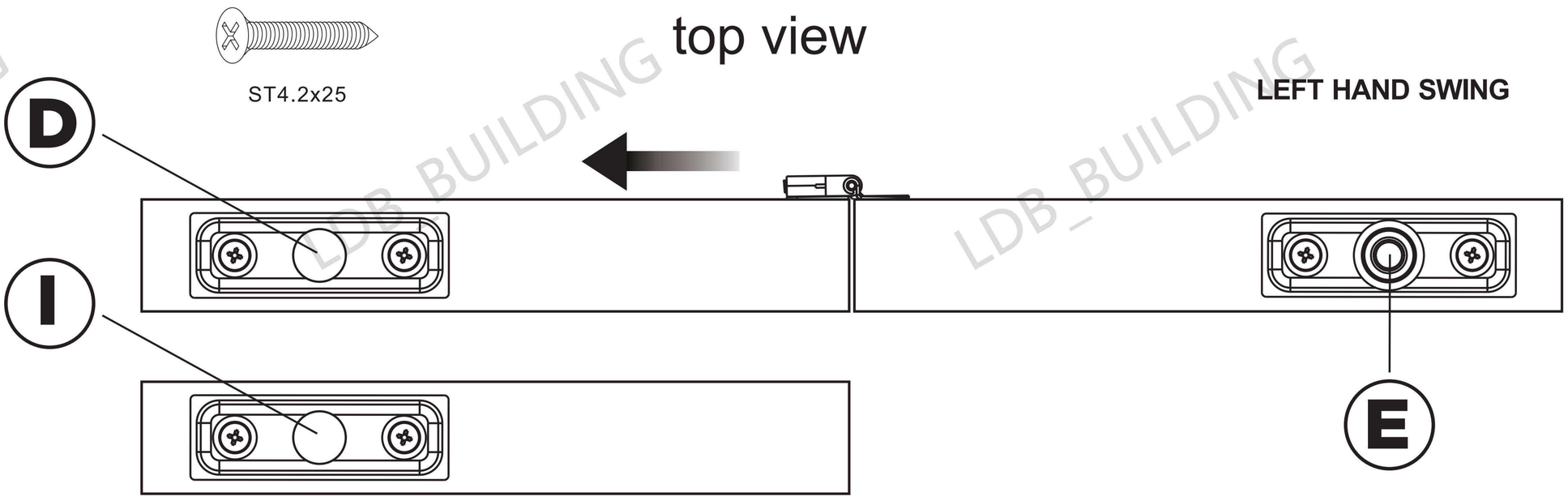

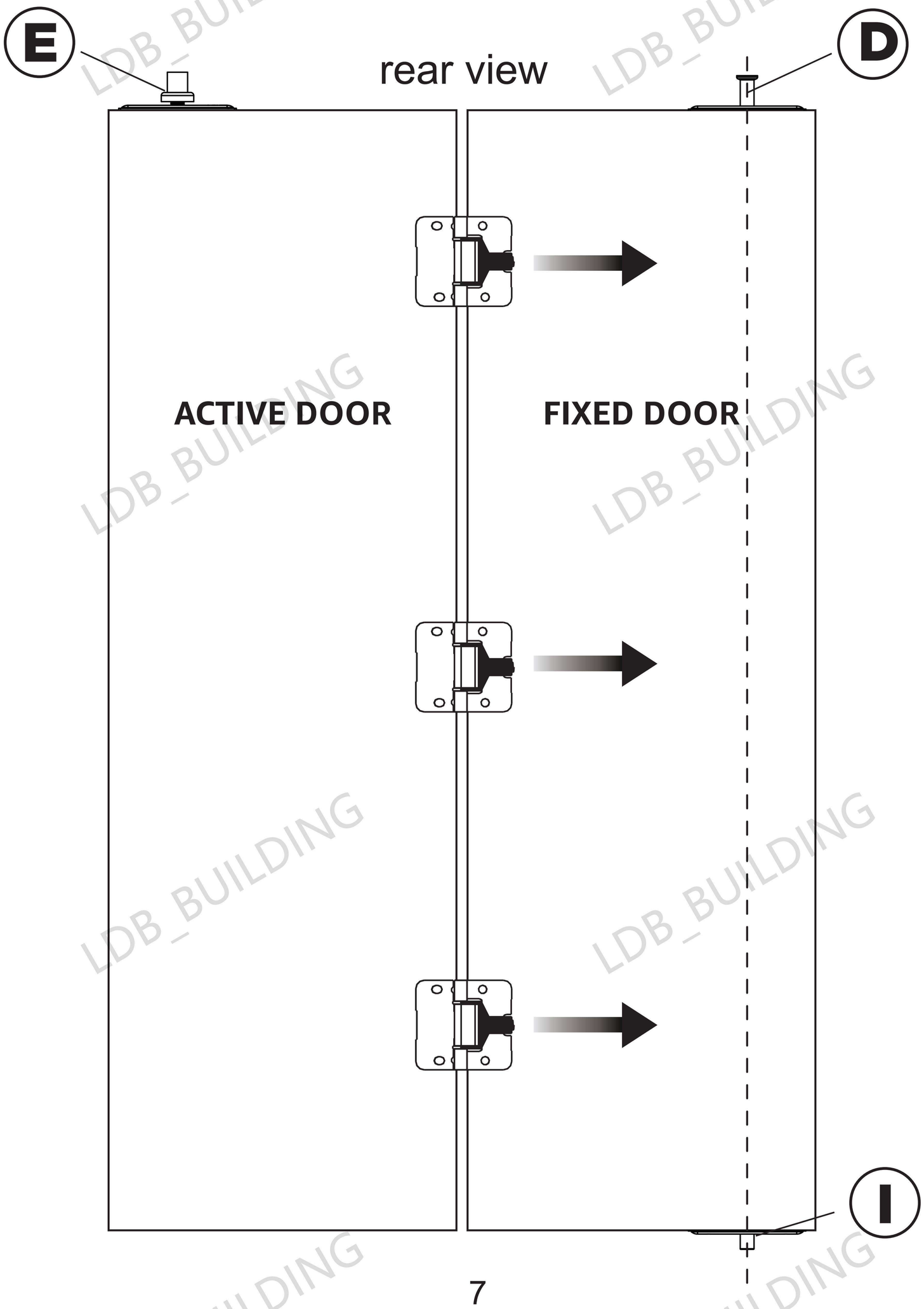

Product Installation

Step 6 Hang the Door

Insert Fixed door top pivot (D) into Track pivot bracket(B) and lock the bracket by pushing the arm inward.

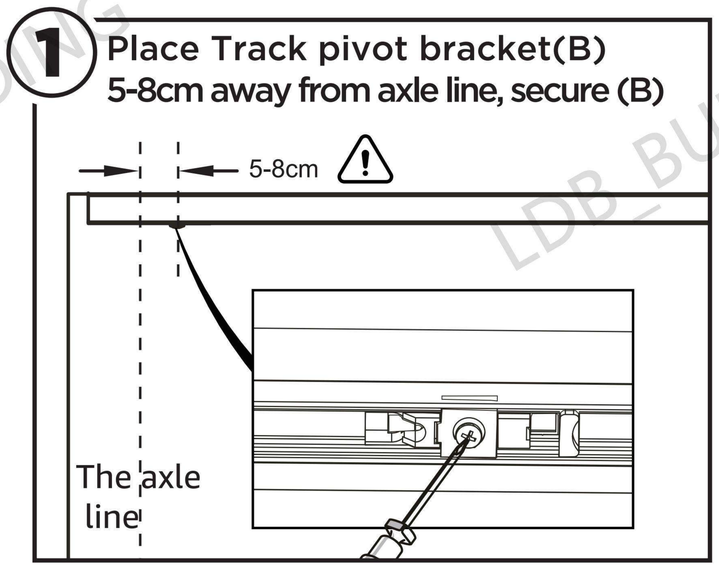

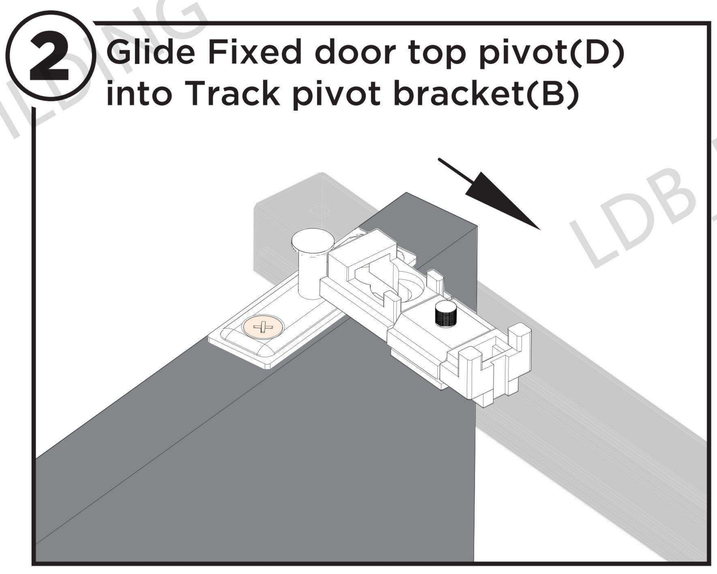

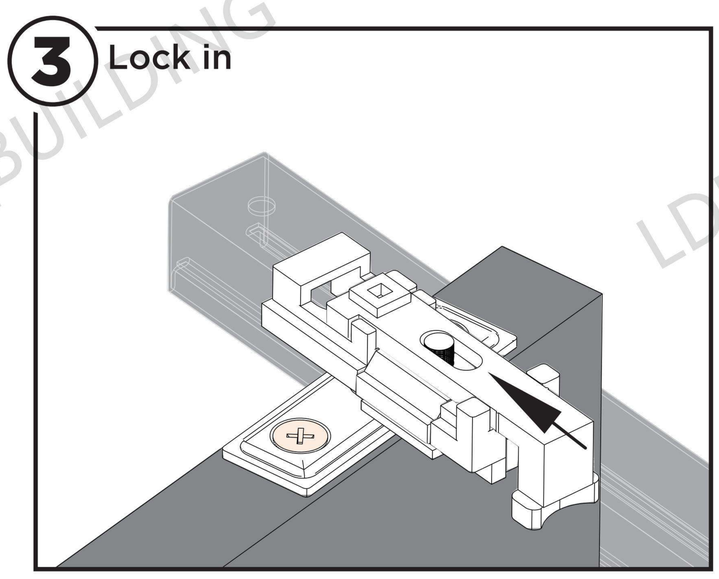

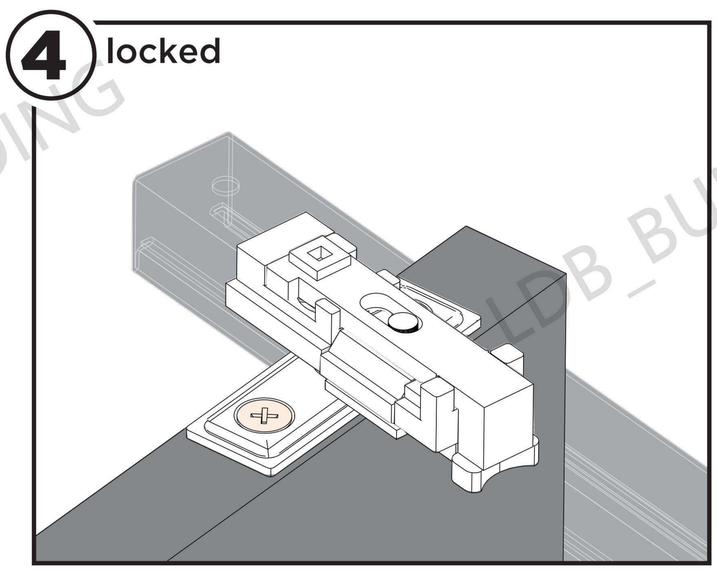

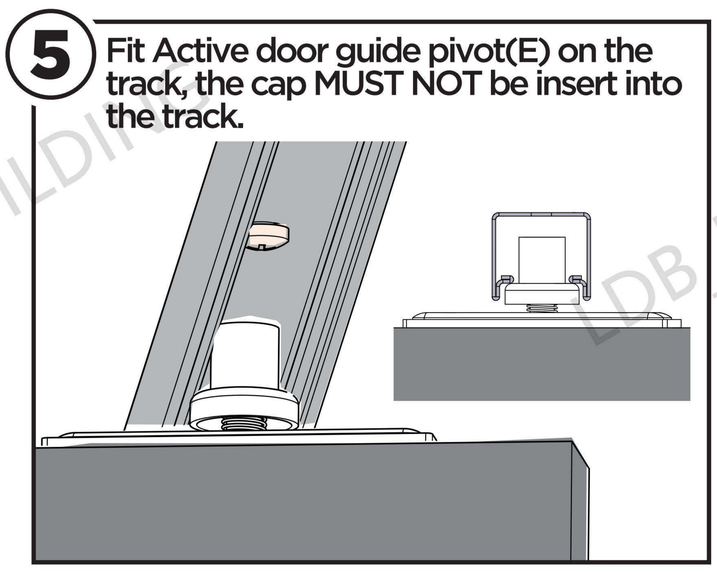

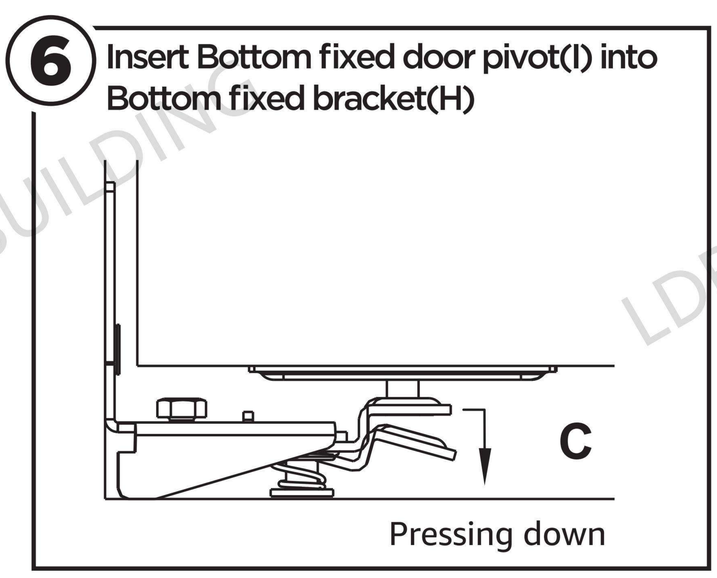

Loosen screw on Track pivot bracket (B), slide the door toward Axle line, secure (B) until the door vertical to the ground.
TIP: If you find the gap is unacceptably large between edge and door kindly adjust Part (H) until acceptable, and ensure your door vertical by adjusting Part (B),

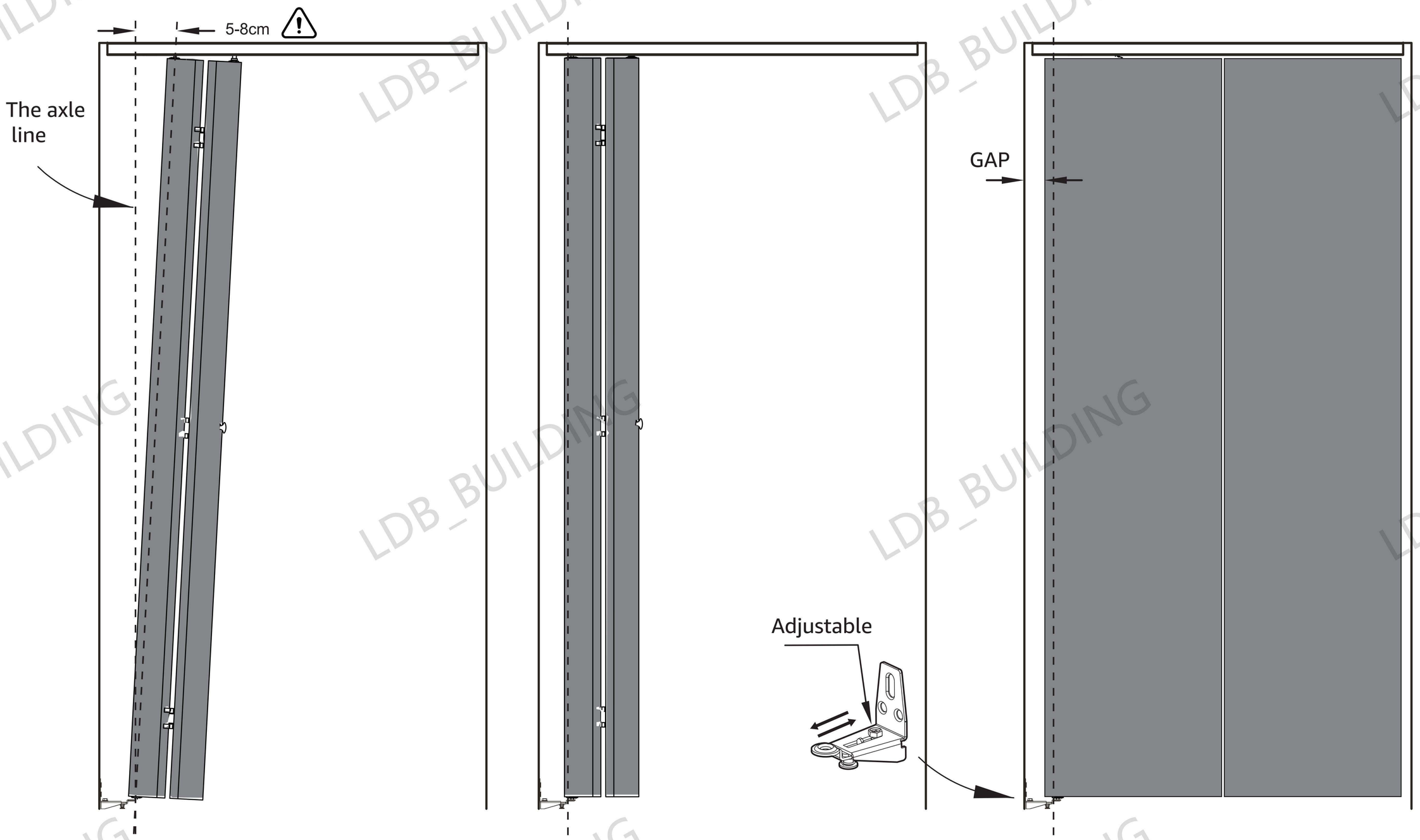

Product Installation

Step 7 Install Knob(G)

Secure Knob(G) with screw from backside through the door panel at a height you prefer.

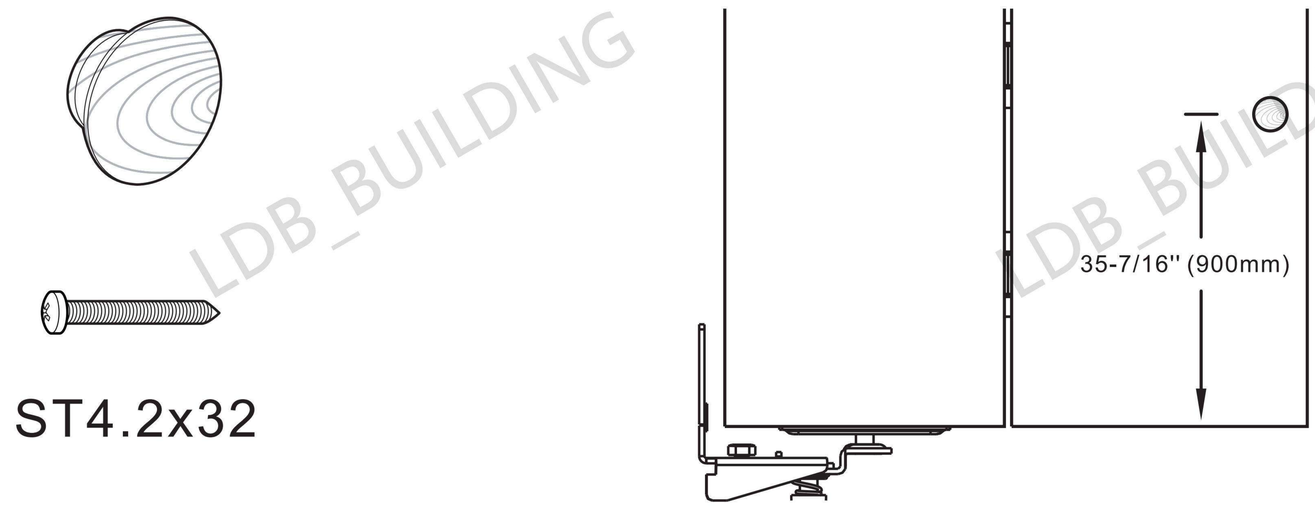

Step 8 Attach Fascia(K)

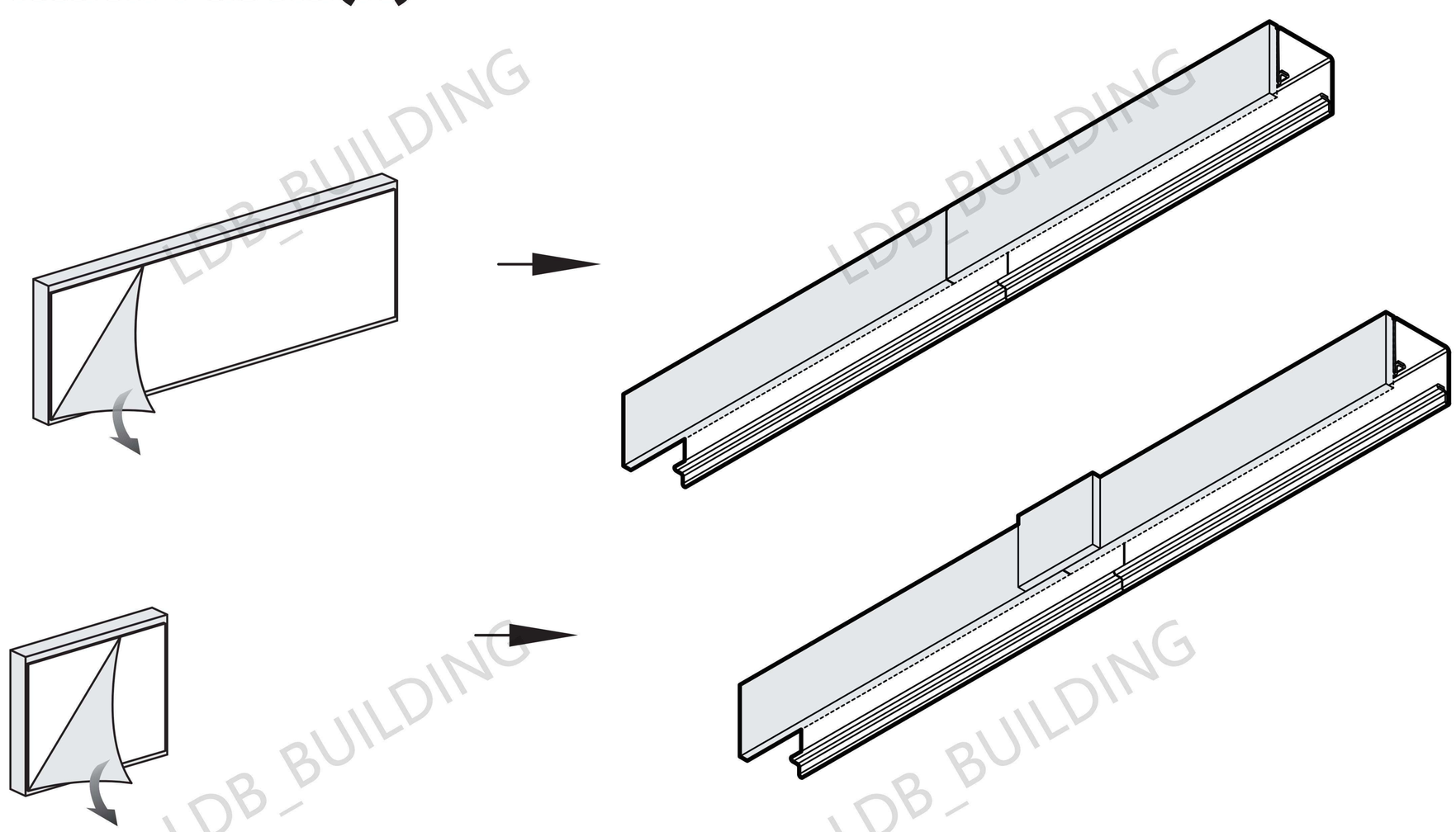

Optional: Step 9 Install Panel Aligner(J)
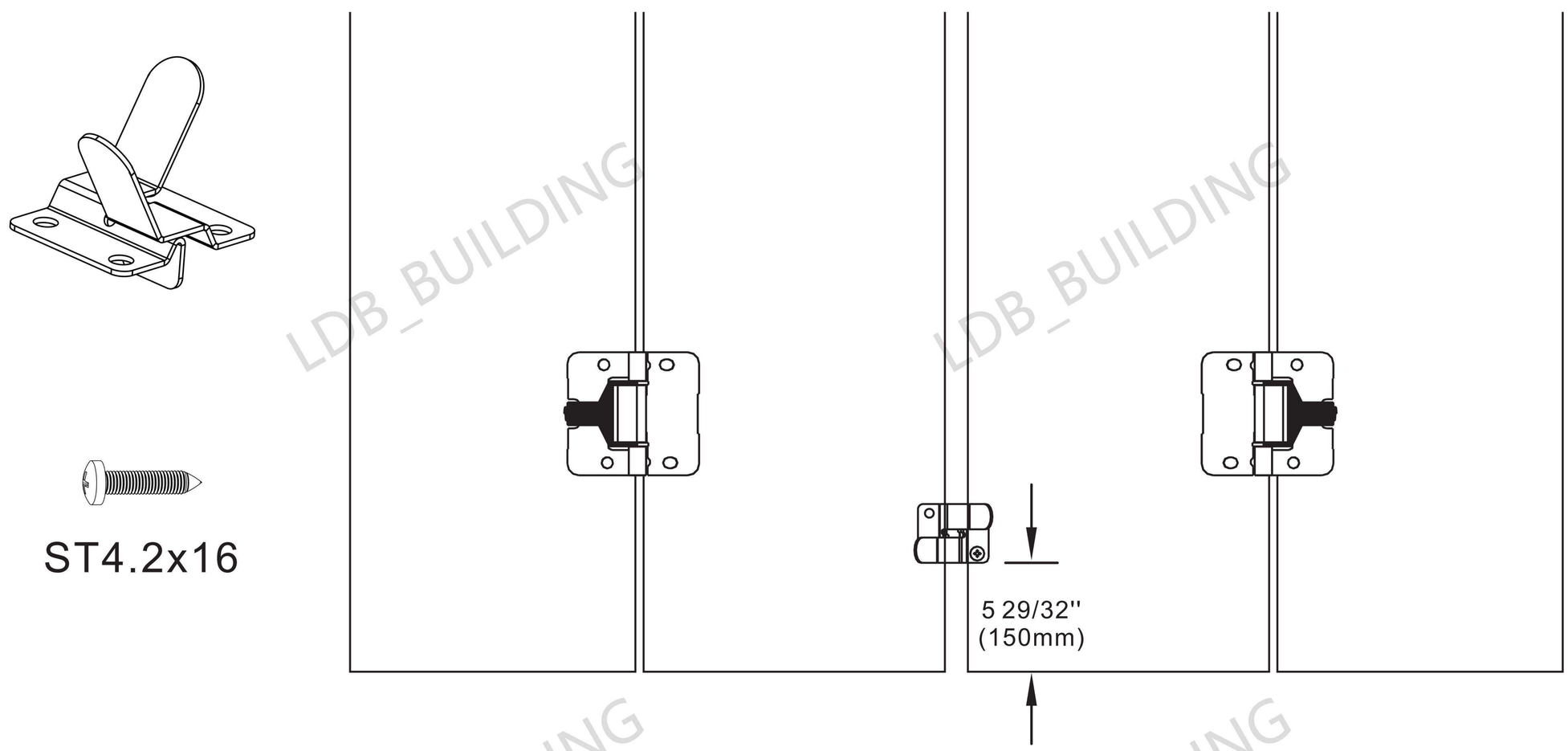
Only applicable to 4 X Panel