Widespread Lavatory Faucet With Brass Pop-Up

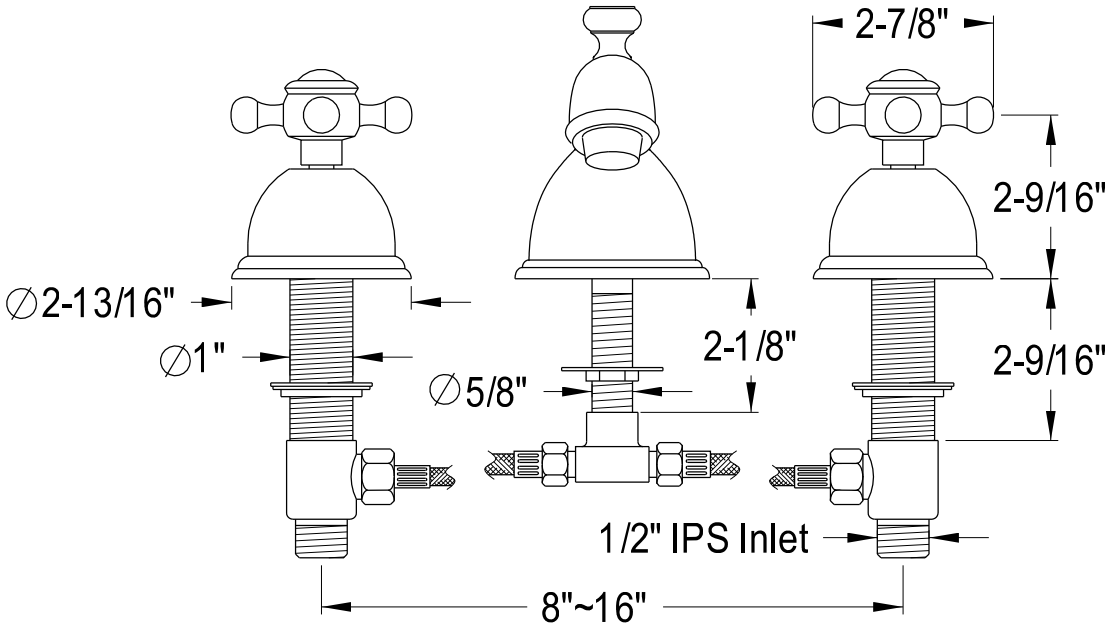

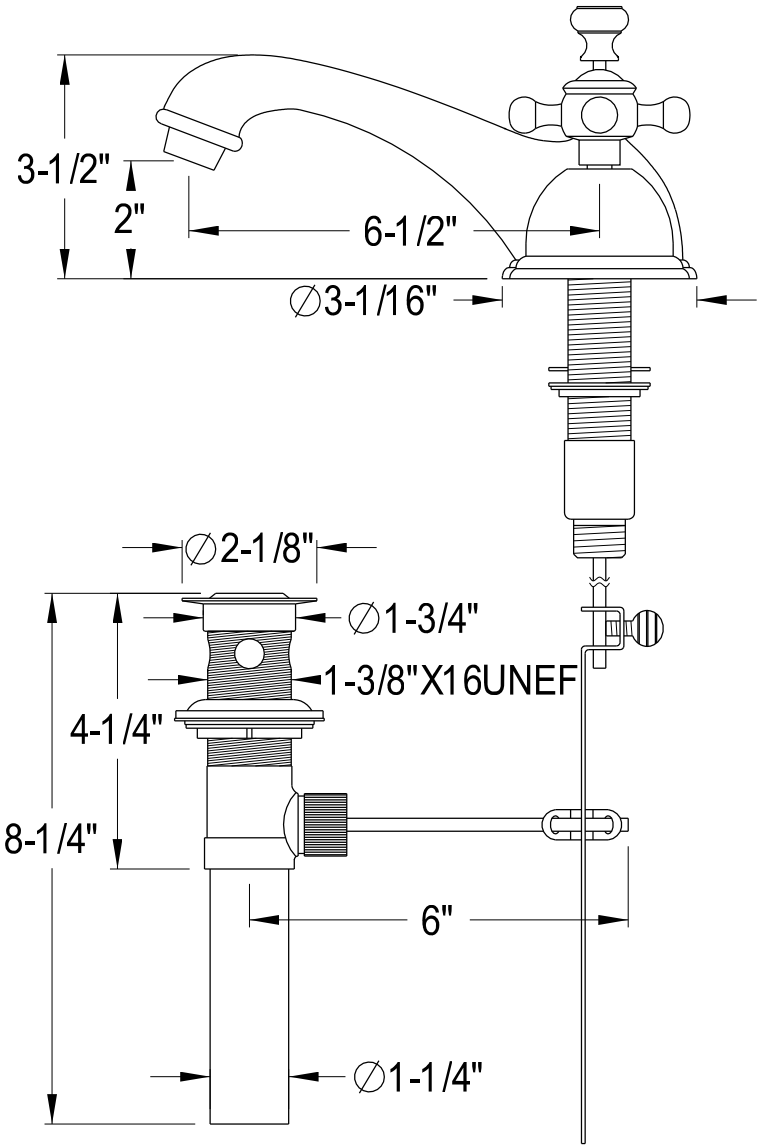

2014-03-B