Installation and Owner's Manual

DeerValley®

Smart Toilet

(DV-1S0442)

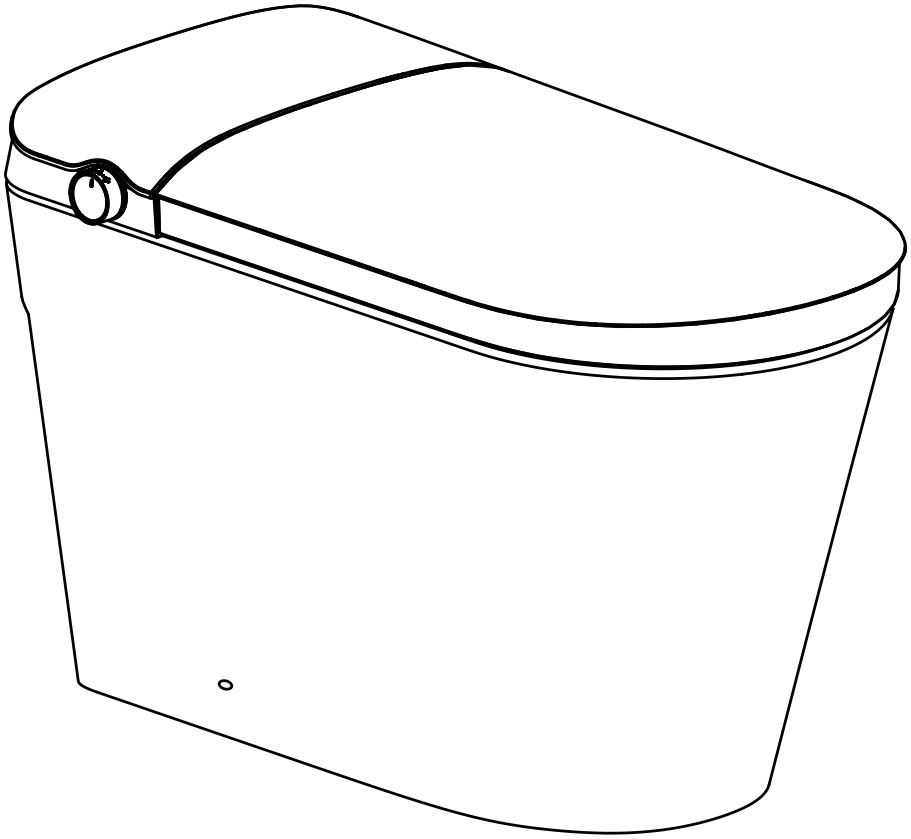

NOTE: Drawings may not exactly define contour of the product.

www.deervalleybath.com | (312) 626-9466 | service@deervalleybath.com

DeerValley®

Installation and Owner's Manual

Scan QR Code for Installation Video

· For easier and correct installation, we highly recommend watching the video before installation to avoid mistakes.

· If the QR code cannot be scanned or the video is unavailable, please contact our customer service for assistance.

https://youtu.be/GKpGi41y8w0

(312) 626-9466
www.deervalleybath.com

TABLE OF CONTENTS

- Safety Precautions 02
- Technical Specifications 05
- Pre-installation 06
- Installation 08
- Remote Control Installation and Battery Replacement 11
- Side Rotary Knob Control 12
- Remote Control Instructions 13
- Automatic Function 17
- Daily Maintenance 18
- Troubleshooting 20

Prior to Installation:

- Inspect toilet to ensure no damages have occurred while in shipping.
- Observe all plumbing and building codes in accordance with your state and local requirements.
- Remove old toilet.
- Make sure mounting surface is CLEAN and LEVEL.

General Recommendations:

Please read installation and maintenance instructions thoroughly before installing the toilet.

Be sure to use proper tools and always wear proper personal safety accessories for your protection.

If you have any questions or concerns please contact us:

(312) 626-9466
service@deervalleybath.com

• Safety Precautions

Before installation, please read this manual carefully and install it in strict accordance with the instructions. After reading, please put this manual in a prominent position. Keep the place properly. In order to avoid injury and property damage to users and others, please strictly observe the safety warnings and precautions.

SIGN	MEANING
Warning	It means that if the regulations in this warning are not observed and misoperation is made, serious injury or death may be caused.
Danger	It means that if the regulations in this warning are not observed and misoperation is made, serious injury or death may be caused.

The following signs are used to indicate important safety precautions when using the product.

SIGN	MEANING
	This figure indicates that it is not feasible and [prohibited].
	This figure shows the content that must be enforced.

WARNING

Do not install and use this product in damp places.This product must be reliably grounded, and the reliable connection of AC socket ground wire to the ground should be ensured. The grounding wire should use a tripod socket. If you are not sure whether it has been reliably grounded, please ask a qualified electrician or maintenance personnel to check and confirm. Please ensure that the wiring of the power socket conforms to the national standard (zero on the left and fire on the right) and cannot be reversed.

It is forbidden to use the power extension cord or loose and unstable power socket, otherwise it may cause fire or electric shock.

The lit cigarettes and other combustibles cannot be put into the toilet cover, otherwise it may cause fire. It is forbidden to disassemble, repair or modify the product by yourself, otherwise it may cause fire or electric shock.

This product must be connected to a special standard socket and wiring with a 110V-120V/50Hz-60Hz load current of at least 10A, and the socket must be equipped with earth fault circuit breaker or earth leakage protector or similar high sensitive and fast leakage switch (rated sensitive current below 10mA).

Do not touch the product that has fallen into water or soaked in water, and immediately unplug the power plug.

If the power cord is damaged, in order to avoid danger, it must be replaced by professionals from the manufacturer, its maintenance department or similar departments.

NOTE: Specialized tools may be necessary to install DeerValley Smart Toilet, plumbing not included.

(312) 626-9466
www.deervalleybath.com

WARNING

Please pull out the power plug when it thunders.

If the product function is abnormal or fails, please stop using it immediately and cut off the power supply, and contact the service provider in time.

When used by people (including children) with physical, cognitive and intellectual disabilities or lack of experience and common sense, it is necessary to use this product under supervision, patients with heart disease should use it carefully.
Do not let children play with this product.

If it is not used for a long time, the power supply and water supply must be cut off.

It is forbidden to disassemble, repair or modify the product by yourself, otherwise it may cause fire or electric shock.

Banana water, gasoline, liquid medicine, detergent, insecticide, toilet cleaner and hard brush are prohibited to clean this product.

Do not pour water or detergent on the machine body or power plug, otherwise it may cause fire or electric shock.

This product is an electrical product. It is forbidden to put it in a place that is easy to be soaked by water. Do not pour

Do not place the product where it may fall or be pulled into the bathtub or sink.

Do not put this product in water or other liquids.

Do not use water other than tap water, otherwise it may cause skin inflammation and other problems.

Do not stand on the ceramic toilet, and do not hit the ceramic with gravity to prevent damage and water leakage.

Do not put fingers or other objects into or block the drying air outlet, otherwise it may cause scald, electric shock or burn.

It is forbidden to use other electrical appliances on the same socket.

The socket shall be installed in a place that is not easy to be soaked by water. It is recommended to use waterproof socket.

The new hose assembly and other attached or designated parts attached with the appliance shall be used for installation. The old hose assembly cannot be reused, otherwise, it may cause water leakage, fire or electric shock.

When the product is moved indoors from a cold or wet place, it should be stored for 2 hours to fully volatilize the condensed water in the machine, and then it can be started for use, to avoid short circuit of products.

Do not connect the water pipe with the outlet pipe of the water heater. The water inlet temperature is 41℉~104℉. If it exceeds the specified range, it may cause internal heating. The component does not work properly.

When using this product, do not lean back on the toilet cover to avoid damaging the product.

NOTE: Drawings may not exactly define contour of the product.

(312) 626-9466
www.deervalleybath.com

WARNING

Do not place the product where it may fall or be pulled into the bathtub or sink.

Do not put this product in water or other liquids.

Do not touch the product that has fallen into water or soaked in water, and immediately unplug the power plug.

It is forbidden to embed cementitious materials (cement mortar) into the base of the ceramic toilet, otherwise the ceramic toilet may be cracked due to expansion.

Do not exert strong force or impact, do not stand on the seat ring, toilet cover or this product, and do not place heavy objects.

Do not let the sun shine directly on the product to avoid discoloration and affect the reception effect of the remote control.

The seat ring and toilet lid of this product would lower slowly. Do not press hard to avoid damaging it .

Do not connect the water pipe with the outlet pipe of the water heater. The water inlet temperature is 41℉-104℉. If it exceeds the specified range, it may cause internal heating.The component does not work properly.

When using this product, do not lean back on the toilet cover to avoid damaging the product.

Please do not flush newsprint, paper urinal pads, women's sanitary napkins and other easily clogged items into the toilet.

Do not use the product in an environment below 32℉. If the room temperature is lower than 32℉, the water in the water supply line of the product must be drained. Prevent the water way from freezing and cracking, causing water leakage or fire during later use.

To prevent damage caused by freezing, please take measures to keep warm and increase the temperature of the toilet.

When installing, disassembling, repairing and maintaining the product, you must unplug the power plug and close the water supply valve.

NOTE: Drawings may not exactly define contour of the product.

● Technical Specifications

Rated voltage		110V-120V
Rated frequency		50Hz-60Hz
Rated power		950W
Pressure of water supply		0.08MPa (minimum necessary water pressure) -0.8MPa (static pressure)
Water consumption		4.0 Lpf (1.1 gpf) / 6.0 Lpf (1.6 gpf)
Ambient temperature		32℉-104℉
Temperature of water supply		41℉-104℉
Toilet Flushing	Flushing type	Jet Siphon
	Rough in	12"
Cleansing	Water heating type	Instant heating
	Water heating power	1300W
	Warm water temperature	Off, 86℉-102.2℉
	Safety device	Temperature fuse, water temperature sensor, grounding protection, over-temp protection
Dryer	Min air volume	≥ 0.2m³/ min
	Air heating power	250W
	Dryer temperature	Off, 86℉-122℉
	Safety device	Temperature controller, temperature fuse, leakage protection plug.
Heating seat	Seat heating power	40W
	Seat temperature	Off,86℉-100.4℉
	Safety device	Temperature sensor, temperature fuse, temperature controller, grounding protection
Water proof rate		IPX4

Note:
Rated power: the product starts to power on and start up under the conditions of ambient temperature of 73.4°F,static water inlet pressure of 26.1psi+/-2.9psi, and water inlet temperature of 59°F. After setting the water pressure, seat temperature and water temperature to the highest level in turn, immediately start the rear wash and continue to work steadily for the average power of a cleaning cycle.

NOTE: Drawings may not exactly define contour of the product.

• Pre-installation

Parts diagram

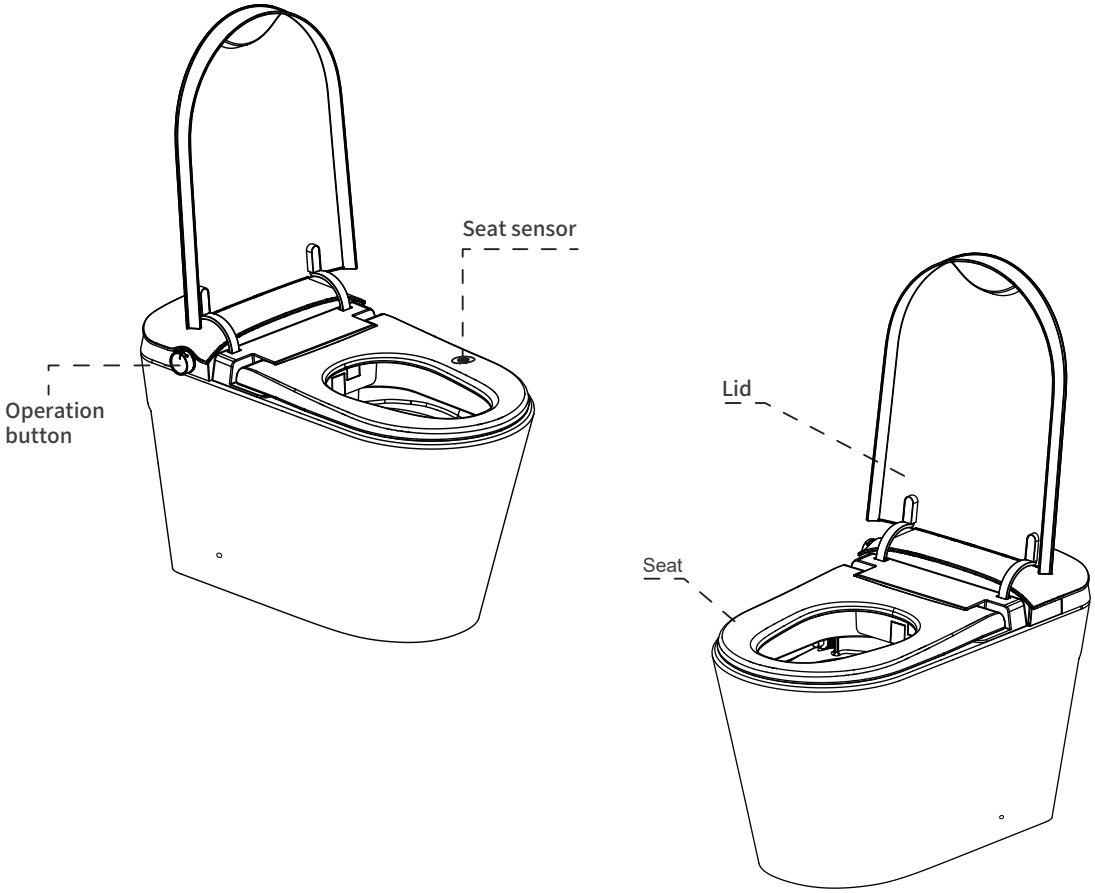

Tools required

Please prepare the following required tools before installation.

Electric Drill

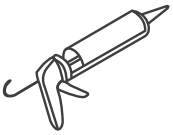
Caulk Gun

Tefion Tape

Knife

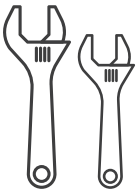
Spanner

Assorted Screwdrivers

Steel Tape

Measuring Glass

NOTE: Drawings may not exactly define contour of the product.

Hardware Included

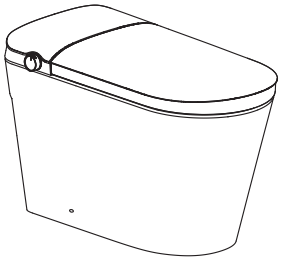

Main unit

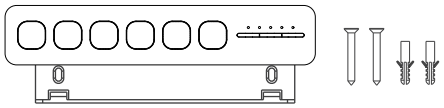

Remote control & Holder
& Expansion screw set

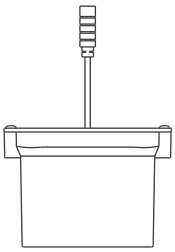

Spare battery box

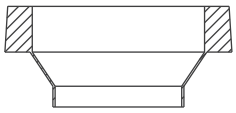

Wax ring

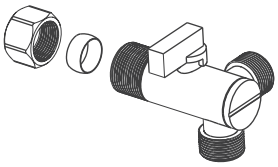

Angle valve

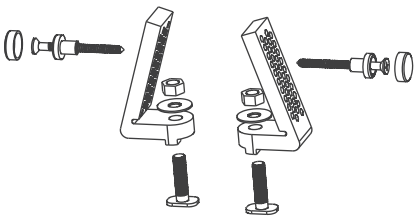

Installation accessories

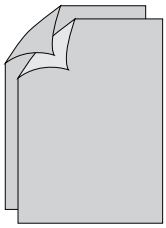

User manual

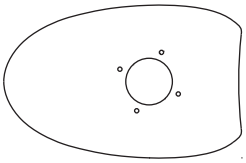

Installation cardboard

NOTE: Drawings may not exactly define contour of the product.

(312) 626-9466
www.deervalleybath.com

• Installation

Technical drawing (unit: in)

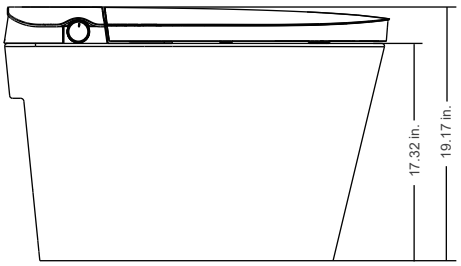

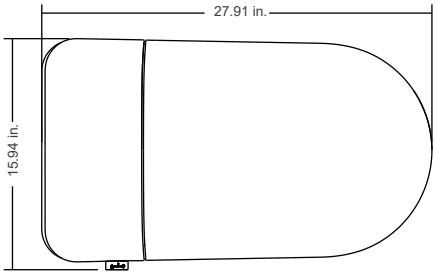

1. Install the offered angle valve

Mark the center line of the drain outlet on the ground, and install the water inlet angle valve at a suitable position on the wall according to the size of the toilet. After installing the angle valve, open the valve to discharge the sewage.

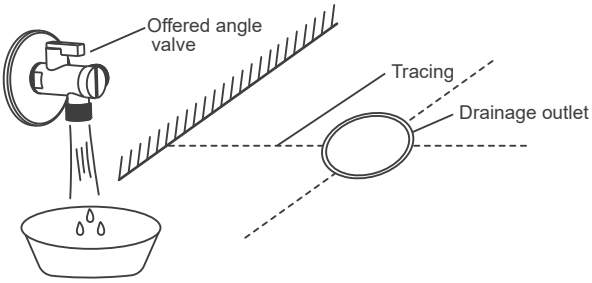

2. Mark the drain with a cross line

Cardboard installation

·Align the cardboard with the center line of the drain;
·Draw contour lines from cardboard.

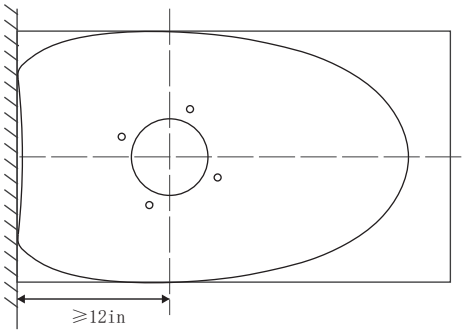

3. Install the flange plate

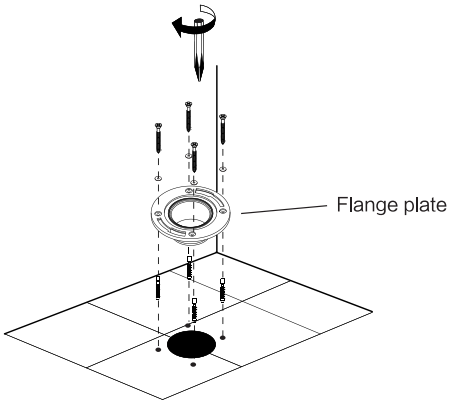

4. Position correctly the two fixing bolts of the flange.

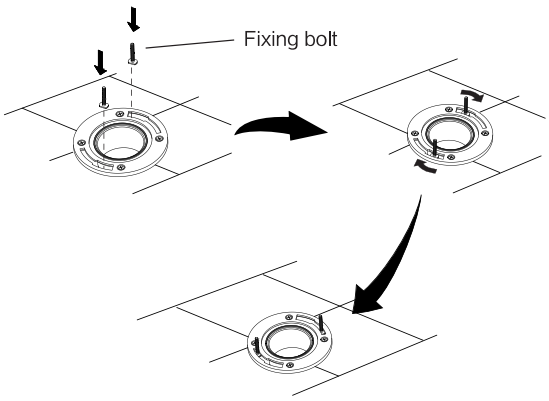

NOTE: Drawings may not exactly define contour of the product.

(312) 626-9466
www.deervalleybath.com

5. Assemble the mounting bracket with bolts and then install them to the pre-installed flange plate on the ground and lock tight with nuts.

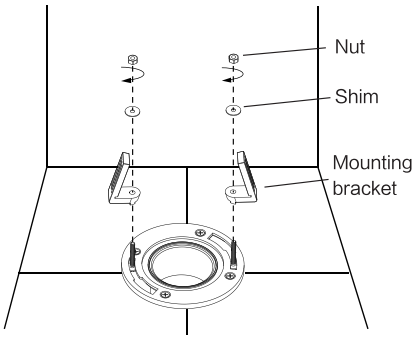

6. Insert the wax ring under the toilet.

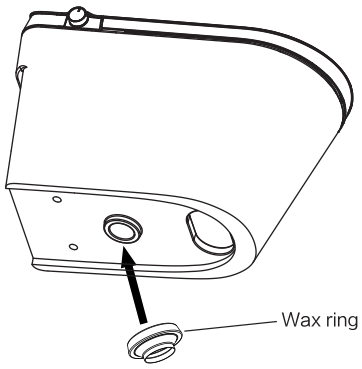

7. Install waxing ring into drain outlet; Install ceramic toilet on corresponding position according to contour line.

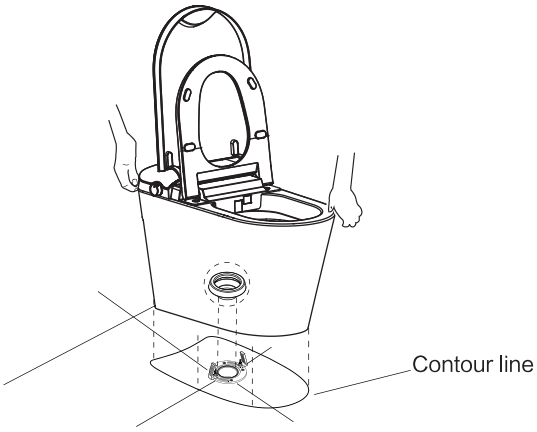

8. Put the screw through the fixing sleeve and then install it through the holes (on both sides of the toilet ceramic) to the mounting bracket on the ground, and lock tight with a tool, put the decorative cap on the fixing sleeve.

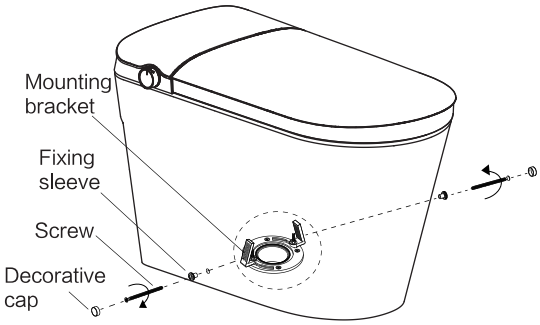

9. Connect hose and angle valve

As illustrated below, connect and securely tighten the inlet hose to the angle valve.

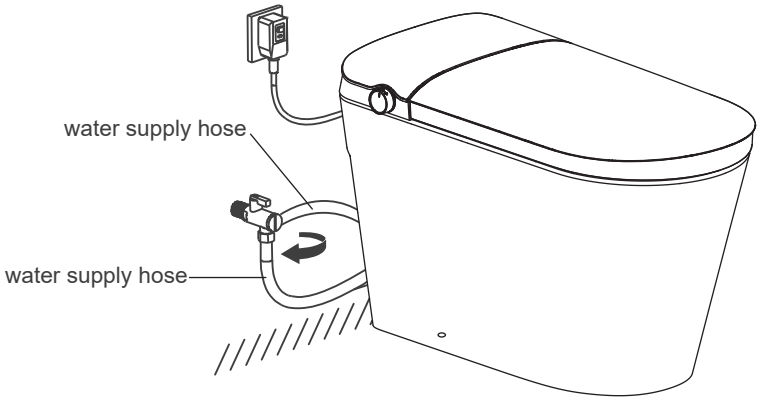

NOTE: Drawings may not exactly define contour of the product.

(312) 626-9466
www.deervalleybath.com

10. Install the battery box

1. Put battery (10pcs, 1.5V AA dry batteries, not included) in the battery box.
2. Connect the cable

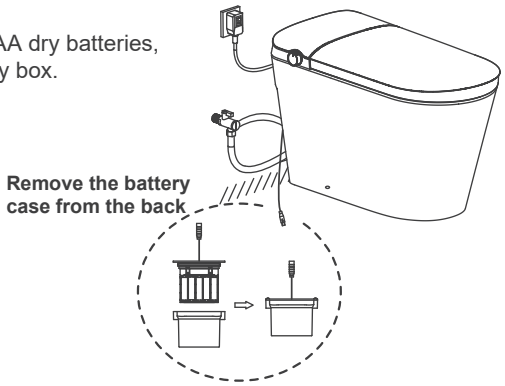

11. Open the angle valve

Check the tightness of the threaded connection to make sure there is no water leakage.
Turn the angle valve counterclockwise and adjust the opening to the maximum.

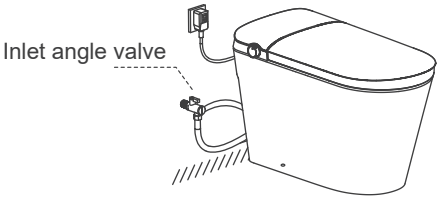

REMINDER

When opening the angle valve for the first time, it may be a bit tight.

12. Power on

Plug the leakage protection plug into the power socket, press the reset switch, and the plug indicator light will be on, indicating that it is powered on.
*It is applicable to the model with leakage protection plug.

REMINDER

*Press the leakage test key before use, the reset switch pops up, indicating leakage protection. The protection function is normal.
*Press the TEST button (then RESET button) every month to assure proper operation.

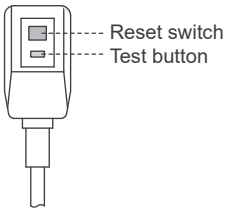

The leakage protection plug is subject to the actual object.

13. Add foam agent
(Please purchase the foam liquid designed for smart toilet from local store or online marketplace)

1. Power down the unit before refilling the foam liquid.
2. Remove the upper cover ,rotate the knob to "OPEN" position,then refill the foam liquid.
3. After filling the liquid, turn the knob to "CLOSE" and close the lid.
4. Restart it after completion.

Note: The unopened package contains 470ml of foam solution, good for 700 uses, with 0.68ml used per use.

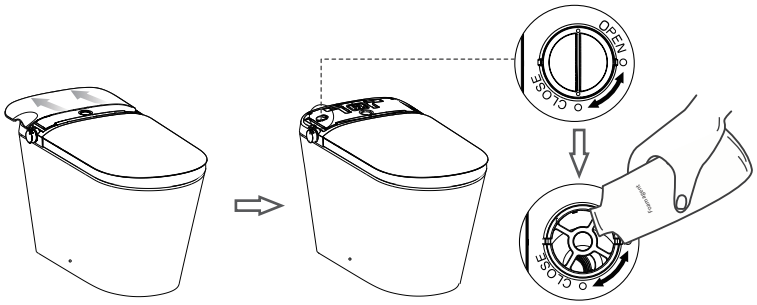

14. Safety self-inspection

Upon power-up, the machine will automatically open the lid and seat, extend and retract the cleaning nozzle. Subsequently, the lid and seat will close, accompanied by a one-tone beep, signifying the completion of the self-inspection process.

NOTE: Drawings may not exactly define contour of the product.

(312) 626-9466
www.deervalleybath.com

• Remote Control Installation and Battery Replacement

Install remote control

1. Install the remote control rack.

(1) Stick the remote control rack horizontally to the pre-installation area on the wall, and mark the position of two installation holes on the wall with a marker. Use a drill bit with a diameter of 6mm to drill holes at the marked positions on the wall, with a depth of 1.4 in.

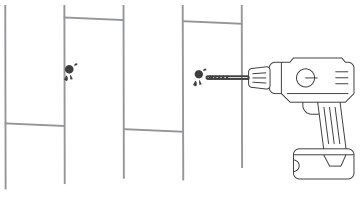

(2) Install the expansion pipe into the wall hole, attach the hanger to the wall, align the hole on the hanger with the expansion pipe, and place the screw to lock it.

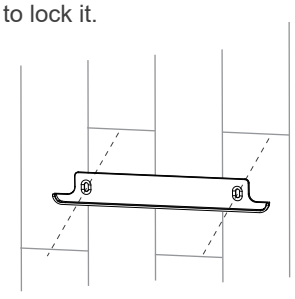

2. Install the remote control hanger (only for the hanger with fixed plate and foam rubber pad).

(1) Clean and dry the pre-installed area of the remote control rack on the wall.

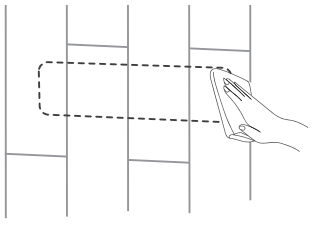

(2) Tear off the double-sided adhesive sticker on the back of the hanger and stick it horizontally to the wall.

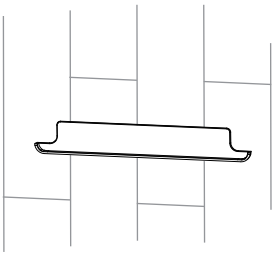

3. Install the battery into the remote control, and place it on the rack.

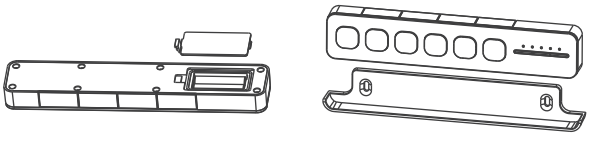

4. Use and replacement of remote control battery.

· The remote control uses 2 AAA alkaline batteries.

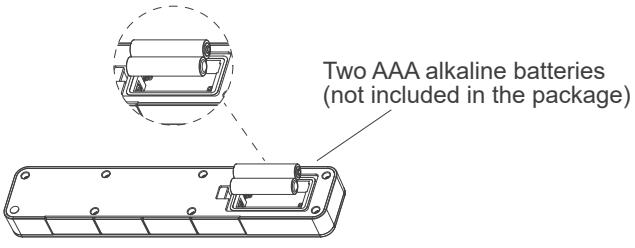

Attention

(1) The positive and negative electrodes of the battery must match those on the remote control.
(2) New and old batteries cannot be mixed.
(3) Please use alkaline batteries.

NOTE: Drawings may not exactly define contour of the product.

(312) 626-9466
www.deervalleybath.com

• Side Rotary Knob Control

⏻/■ Power/Stop

1. Long press this button for 5 seconds to enter standby mode.
2. Press any button on remote control or press/rotate the knob to exit standby mode, entering the startup mode.
3. when the rear wash, front wash or warm air drying function is running on, short press this button to stop function halfway.
4. Under the non-functional mode, press this button to flush toilet.

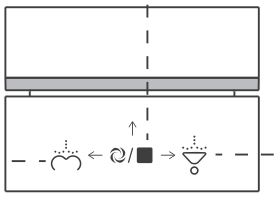

Rear Wash

In the power-on state, seated and without washing and drying.

Rotate the knob counterclockwise to start the rear wash function. It will automatically stop when the procedure end. Short press the knob or the Stop button on the remote control to stop the function halfway.

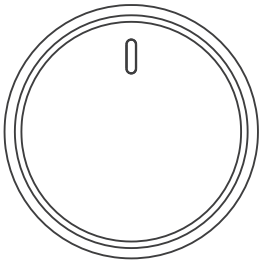

Front Wash

In the power-on state, seated and without washing and drying.

Rotate the knob clockwise to start the front wash function. It will automatically stop when the procedure end. Short press the knob or the Stop button on the remote control to stop the function halfway.

NOTE: Drawings may not exactly define contour of the product.

• Remote Control Instructions

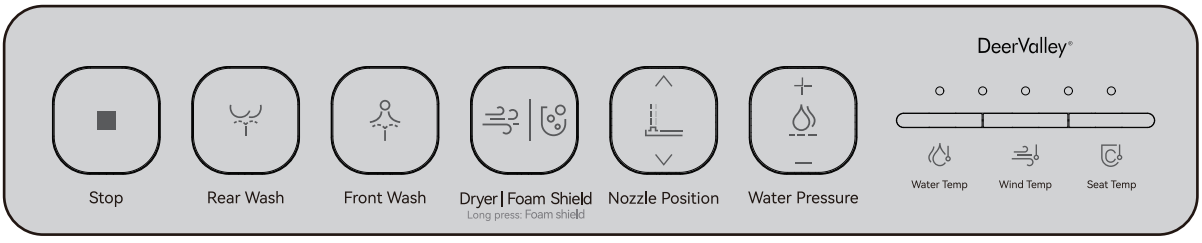

Stop

Short press stop button to cease on-going functions halfway. Long press stop button to enter or exit ECO mode. Under this mode, the seat temperature will be lowered to 1st gear automatically. Once human is seated, it will exit ECO Mode. When human is off-seat, the ECO mode will resume.

Rear Wash

Press this button to start the rear wash function. Press this button again to perform oscillating massage. If you press the Stop key halfway, you can stop it immediately.

Note: Under the oscillating massage procedure, the nozzle will extend and retract repeatedly to achieve the massag effect.

Front Wash

Press this button to start the front wash function. Press this button again to perform oscillating massage. If you press the Stop key halfway, you can stop it immediately.

Note: Under the oscillating massage procedure, the nozzle will extend and retract repeatedly achieve the massage effect

Dryer/Foam Shield

Press button to active warm drying with 6 options of wind temperature.
Press "stop" button if stop the drying halfway.
Long press button to activate the foam shield function.
Note:Automatic flush firstly before warm dry funtion starts.

NOTE: Drawings may not exactly define contour of the product.

(312) 626-9466
www.deervalleybath.com

Water Temp

When cleaning, the water temperature is adjustable with 6 gears. When in off gear, the water flows in ambient temperature and the indicator light is off.

Air Temp

When drying, the air temperature is adjustable with 6 gears. When in off gear, it blows in ambient temperature and the indicator light is off.

Seat Temp

The seat temperature is adjustable with 6 gears. Please do not cover the seat sensor in case of sensing failure. The seat temperature will switch to 1st gear after long time sitting in case of low-temperature burns.

Nozzle Position

The nozzle position can be adjusted with 5 gears. Press the nozzle adjustment ∧ key to extend the nozzle forward, press the nozzle adjustment ∨ key to retract nozzle backwards.

Water Pressure

When cleaning, press this button to adjust water pressure in 5 different gears. Press + key once to raise one level, press - key once to decrease one level. The indicator light will display accordingly.

NOTE: Drawings may not exactly define contour of the product.

Top view of remote control(DV-1S0442)

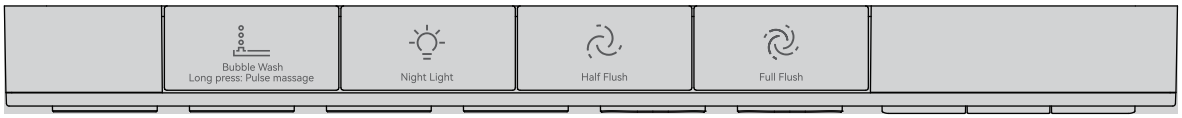

Bubble Wash

Short press this button to perform bubble wash.
Long press this button to perform pulse massage.

Night Light

Press this button to toggle the night light through two modes:on mode, and off mode.
Note: Long press this button for 5 seconds to turn on/off the indicator light on the knob.

Half Flush

Short press to execute the half flush function.

Full Flush

Short press this button to perform full flush function.

Control function setting

1. Night Light

① Short press the "Night Light" button to toggle between auto-sensing ,on,off model. Note: Under auto-sensing mode, the night light will automatically turn on when the lid is opened.It will also turn off automatically when the lid is closed.So auto-sensing mode need opting for an electronic toilet with the automatic open/close lid function.
② Long-press "Night Light" button to turn on or off the display and ambient lights.(Applicable for models with this function)

2. Nozzle manual cleaning function

·Long-press the "Stop" button and "Rear Wash" button on the remote control at the same time to enter the manual cleaning procedure.
·During the manual cleaning process, press the "Stop" button on the remote control or knob to exit the manual cleaning mode and the nozzle will retract;

NOTE: Drawings may not exactly define contour of the product.

3. Nozzle automatic cleaning function

• Long-press the "Stop" button and "Front Wash" button on the remote control at the same time to enter the nozzle automatic cleaning mode

• During the automatic cleaning process, once human seated, it will exit the automatic cleaning mode. The nozzle will stop flowing water and retract.

4. Mute function

• Long-press the "Stop" button and "Dryer" button on the remote control at the same time to enter the mute mode.

• The buzzer function is off in mute mode.

5. Remote control match code

Long-press the "Front Wash" button on the remote until five indicator lights flash simultaneously Before the device is powered on.After powering on and sucessfully pairing,exit the mode by pressing "stop" button on the remote control waiting for 10 seconds.The 5 indicators stop flashing.

6. Auto-temperature adjustment

① Long-press the "Seat Temp" button to turn on/off smart temperature sensing function.

② The temperature sensor detects the actual ambient temperature and automatically ajusts the seat, wind,water temp to optimal temperature.Or use the remote control to set your preferred temperature while seated.

7. Turn on or off the automatic foam shield function when the seat is seated

Long-press the "Water Temp" button and "Dryer" button on the remote control to turn on or off the automatic foaming function when the seat is seated.

8. Manual foam liquid drawing function (Applicable for models with this function)

Long-press the "Water Temp" button on the remote control to active the manual foam liquid drawing function.

9. Automatic flush after leaving the seat

Long-press the "Flush（or Half Flush)" button and "Rear Wash" button on the remote control to turn on or off "auto-flush upon leaving" the function.

10. Switch to temperature unit

Long-press the "Water Temp" button and "Wind Temp" button to switch the temperature unit on display. (Available for °F and °C)

11. Pre-wetting function

Long-press the "Rear Wash" button to turn on/off the pre-wetting function.

12. Flushing interval

After flushing, it will take a while (more than 45 seconds) before flushing again (due to water tank refilling). During the flushing process and the interval, the flushing command will not be responded to, and the buzzer will sound an invalid tone.

NOTE: Drawings may not exactly define contour of the product.

• Automatic Function

Automatic flush after leaving the seat

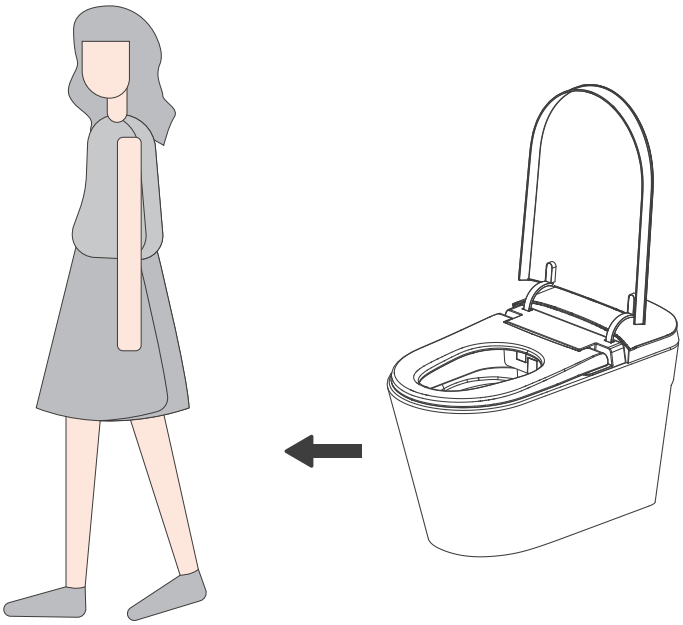

Under the automatic flush mode, when the user is detected staying on the seat for 10-30 seconds, it wil perform half flush function after user leaving seat; when the user is detected staying on the seat for ≥30 seconds, after the user leave the seat for 5±1 seconds, it will perform the full flush function automatically.

NOTE: Drawings may not exactly define contour of the product.

• Daily Maintenance

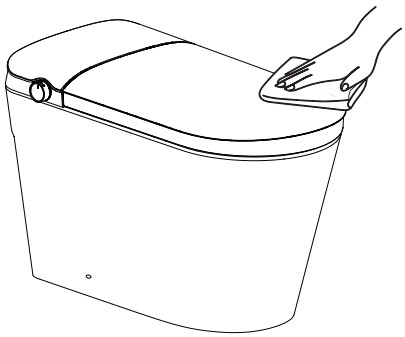

Maintenance of body

1. Cut off the power supply

Please cut off the power supply before maintenance.

2. Wipe with soft cloth

Please wipe the dirty parts with a soft damp cloth and then let it dry.

3. Safety self-inspection

Please reconnect the power supply after cleaning.

Nozzle maintenance

1. Nozzle extends

Press and hold the "Stop" button and "Rear wash" button on the remote control for 3 seconds at the same time to enter the manual cleaning procedure.

2. Nozzle cleaning

Please wipe with a soft cloth or soft brush.

3. Cleaning is completed

Press the "Stop" button to exit the manual cleaning mode and the nozzle will retract automatically.

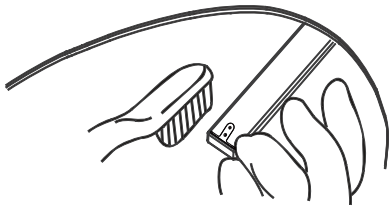

Filter screen cleaning

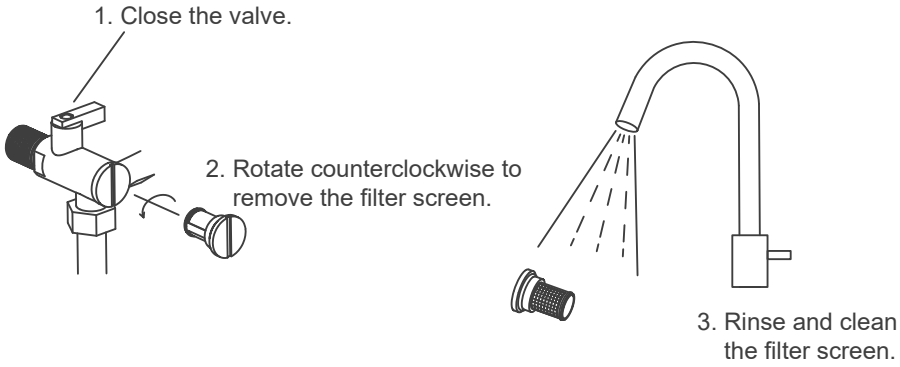

NOTE: Drawings may not exactly define contour of the product.

Drain the water in the pipeline when not in use for a long time

1. **Pull out the power plug to cut off the power.**
2. **Close the inlet angle valve, unscrew the hose from the angle valve, drain the water in the pipeline and reinstall it.**
   For safety, it is recommended to put antifreeze into the accumulated water in the toilet.

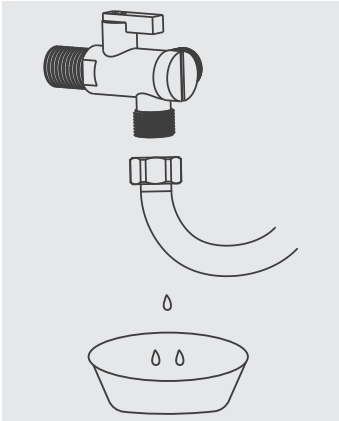

TIPS

Before opening the angle valve, the power must be cut off! When using the toilet again, be sure to connect water supply first, then plug in.

When water and electricity are cut off

1. Flushing during power outage (under the condition that the spare battery box is connected and has filled battery). Long press the side button to flush.

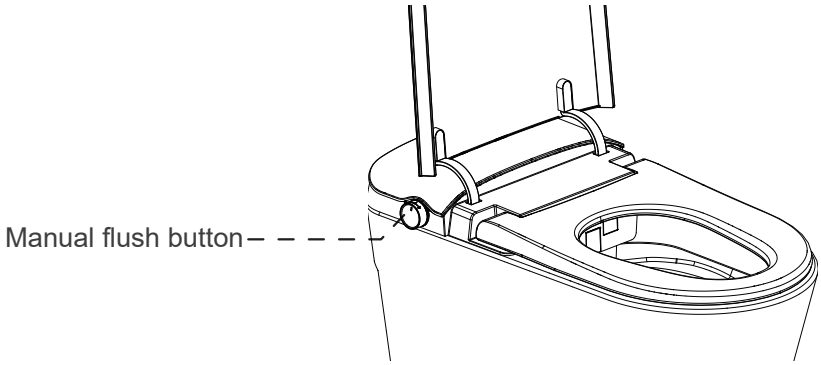

2. Flushing during water outage

   Flush the toilet with external water (pour approx. 2 Gallons water into the bowl). Beware of overflow.

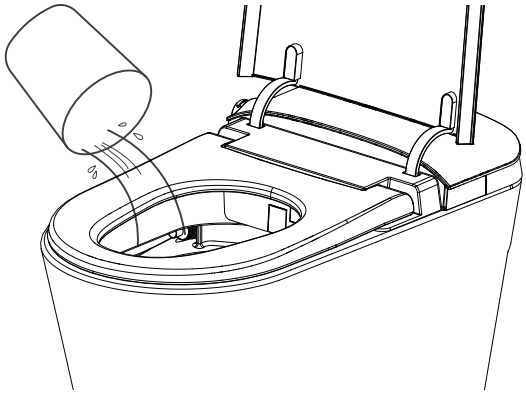

NOTE: Drawings may not exactly define contour of the product.

• Troubleshooting

Product part or function	Phenomenon	Cause	Solutions
Complete machine	Not working	Whether the power supply is off	Power on
		Whether the leakage protector is off	Press the leakage switch again
		Power failure or not	Wait for power supply
Rear wash / Front wash	Not working	Whether the water supply switch is on	Turn on the water supply switch
		Whether the water supply is cut off	Wait for water supply to recover
		Whether the nozzle is blocked by foreign matters	Remove foreign matters and manually clean the nozzle
		No skin contact with seat sensor	Re-adjust sitting position to ensure skin contact with sensor
	Low water pressure	Is the water pressure gear set to low gear	Reset the water pressure gear
		Whether the water supply channel is normal	Clean the filter screen at the water supply outlet and supply water again
	Water temperature is low	Whether the water temperature is set to low gear	Reset the water temperature gear
	Stop water halfway	Whether the automatic stop time is exceeded	Re-execute the function
		No skin contact with seat sensor	Re-adjust sitting position to ensure skin contact with sensor
Warm air drying	Low heating temperature	Whether the wind temperature gear is set to low gear	Reset the water temperature gear
	Half-way stop	Whether the automatic stop time is exceeded	Re-execute the function
		No skin contact with seat sensor	Re-adjust sitting position to ensure skin contact with sensor
Seat ring heating	Insufficient seat ring temperature	Is the seat temperature gear set to low gear	Reset the seat temperature gear
Deodorization	Not working	No skin contact with seat sensor	Re-adjust sitting position to ensure skin contact with sensor
Remote control	No reaction	Objects cover the sensing window	Remove the objects
		Incorrect use angle and sensing distance	Adjust angle and distance
		Batteries run out	Replace with new batteries

NOTE: Drawings may not exactly define contour of the product.

(312) 626-9466
www.deervalleybath.com

DeerValley®

TWO YEARS LIMITED WARRANTY

Phone: (312) 626-9466
Email: service@deervalleybath.com
Web: www.deervalleybath.com

LIMITED WARRANTY COVERAGE

2-YEAR LIMITED WARRANTY

DeerValley products are made with quality materials and excellent craftsmanship to provide customers with a long-lasting product. If any defects in materials or craftsmanship are found under normal use within the first two years of delivery, DeerValley will provide replacement parts at no charge or, at its option, replace any product or part of the product deemed defective under normal installation, use, service, and maintenance. This warranty applies only to the original purchaser. Proof of purchase will be required to process any claims. SCRATCHES ARE NOT COVERED UNDER WARRANTY.

The manufacturer warrants this product to be free of manufacture defects during the above mentioned warranty time. Please keep a copy of the original invoice as proof of purchase.

DeerValley will, as its option, (1) repair or replace the defective part(s) or product(s) at no charge; (2) issue a refund of the original purchase price of the product(s) (Valid within 30 days from the date of delivery); or (3) issue a credit to be applied toward the purchase of a new DeerValley product shipping/delivery charges may apply and are in DeerValley sole discretion.

DeerValley recommends the installations to be made by a licensed, professional plumber. DeerValley will not be held responsible for any damage or product failure due to improper installation, misuse, or failure to use a licensed professional. DeerValley is not responsible for any removal or installation cost.

This limited warranty shall not apply to goods which have been subject to accident, negligence, improper installation, product abuse, product misuse, or use of cleaners containing abrasives, alcohol or other organic solvents, whether performed by a contractor, service company, or yourself, are excluded from this warranty.

DeerValley responsibility under this limited warranty is limited to only to replacement parts and no other costs. DeerValley will not be responsible for labor charges and/or damage incurred by installation, repair or replacement, nor for any indirect incidental or consequential damages, losses, injury or costs of any nature relating to this product Except as provided by law, this limited warranty is in lieu of and excludes all other warranties, conditions, and guarantees, whether expressed or implied, statutory or otherwise, including without restriction those merchantability of fitness for use.

RESPONSIBILITIES OF OTHERS

Inspecting the unit prior to installation is the responsibility of the installer or building contractor who acts on behalf of the user. They are responsible for ensuring the unit is free of defect or damage.

Notices are placed on and in the unit and on the shipping carton advising the installer of this responsibility.

In the event of a problem, the unit must not be installed. DeerValley is not responsible for failures or damage that could have been discovered, repaired, or avoided by proper inspection and testing prior to installation.

Damage occurring in transit is the responsibility of the carrier. The user or installer MUST open the crate and inspect the unit for damage when it is delivered. If damage is discovered, it must be reported immediately to the seller and the carrier in writing, and an inspection requested. Failure of the carrier to respond should be reported to the seller and the carrier. Your freight claims should be filed promptly thereafter.

LIMITATIONS AND EXCLUSIONS

This warranty does not cover instances of negligence, misuse, abuse, improper installation, carelessness, accident, hard water ormineral deposits, exposure to corrosive materials, misapplication, damages caused by improper maintenance, alteration of theproduct, or failure to follow care or installation instructions enclosed with your product. The warranty becomes invalid if the DeerValley product undergoes any alterations or if attempts are made to carry out repairs using unauthorized accessories or parts from DeerValley.

DeerValley will not be liable for loss of use of the DeerValley products, inconvenience, or any other incidental or consequential costs, expense or damages. Please note that some states do not allow the exclusion or limitation of incidental damages.

DISCLAIMER

Except as expressly provided, there shall be no warranty or obligation, express or implied, oral or statutory. No dealer or other person has the authority to make any warranties or representations concerning DeerValley or its products. In no event shall DeerValley be held respon sible for any such warranties or representations.

WARRANTY SERVICE

NOTE: When requesting warranty, be sure to have the following:

- Copy of original invoice
- Date of installation
- Description and pictures of defect
- Model number or description of model

To obtain warranty service and replacement part, please contact DeerValley Customer Service. DeerValley will determine whether to repair or replace your product, issue a refund, or issue a credit.