# PRODUCT INSTRUCTIONS

Dimmable with remote | Timing function | Silent operation | Six-speed speed | RF remote control | APP control

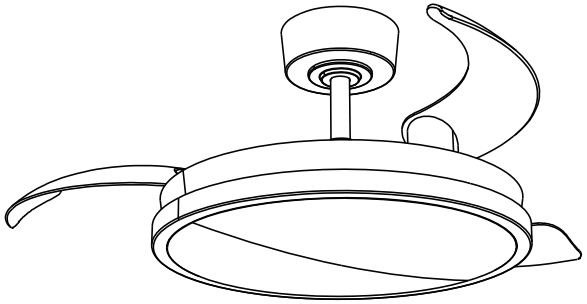

**WARNING!**

Installation must be carried out by certified professionals. Users are not allowed to install it themselves!

1.Power off before installation. 2.Installation must be done by qualified personnel.
3.Ensure the mounting surface is structurally solid. 4.Use only original mounting parts.

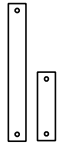

Downrod
20CM/10CM
x1 PCS

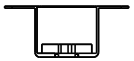

Suspension Bracket
1 PCS



Suspension Canopy
1 PCS

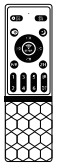

Remote Control
1 PCS

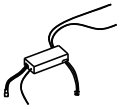

Controller
1 PCS



Decorative cover
1 PCS



Wiring cap
3 PCS



Horn-shaped Cover
1 PCS



Wood screw
4 PCS

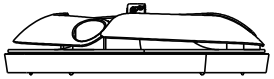

Main lamp body
1 PCS

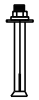

Expansion bolt
2 PCS



Lampshade
1 PCS

Note: Verify the product components according to this list.
If any item is missing, please contact customer service.

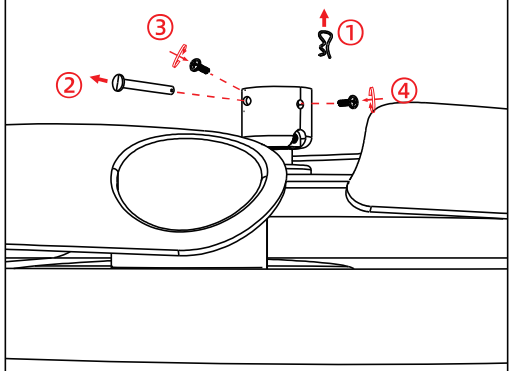


Remove the R-pin, safety pin, and screws as shown in the diagram.

01

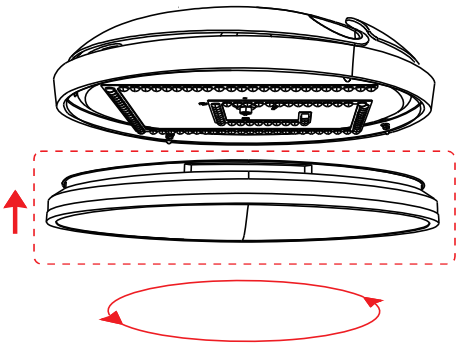

Screw on the lampshade.

02

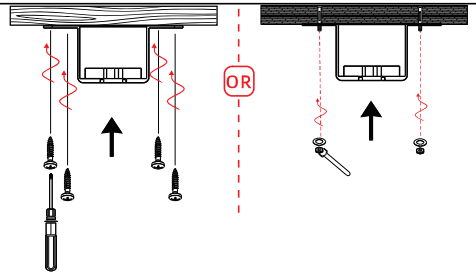


1.For wooden ceilings, use wood screws to install the suspension bracket.
2.For concrete ceilings, use expan sion screws to install the suspension bracket.

03

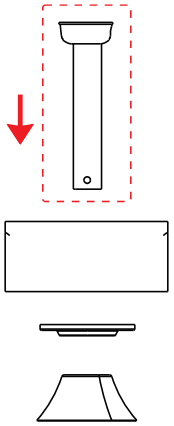

04

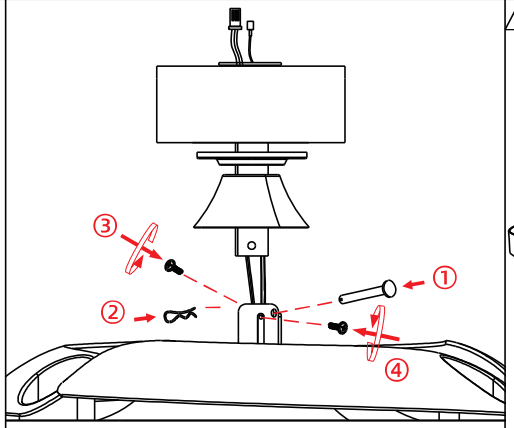


Insert the safety pin and R-pin, and tighten the screws as shown in the diagram.

05

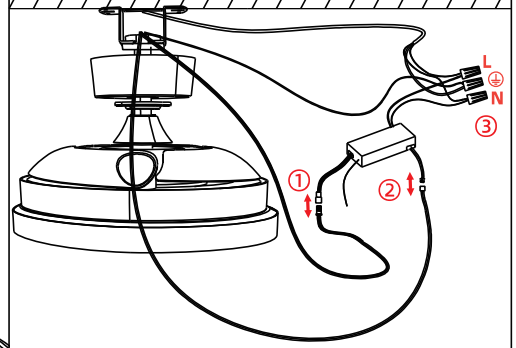


Connect the wires in the order shown in the diagram.

06

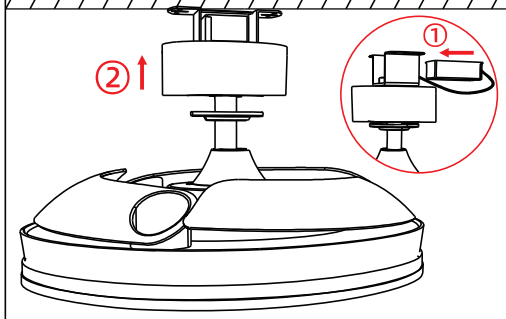


Push the canopy up onto the mounting bracket and align it with the screw holes.

07

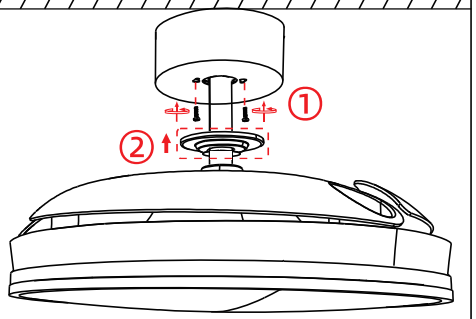


Tighten the canopy screws, then push up the decorative cover.

08

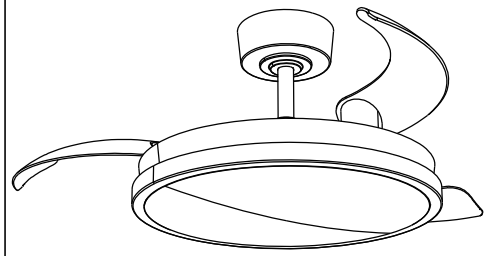

Safety Notice: Turn off the power before installation. Installation must be performed by a professional technician.

09

# Remote Control Button Instructions

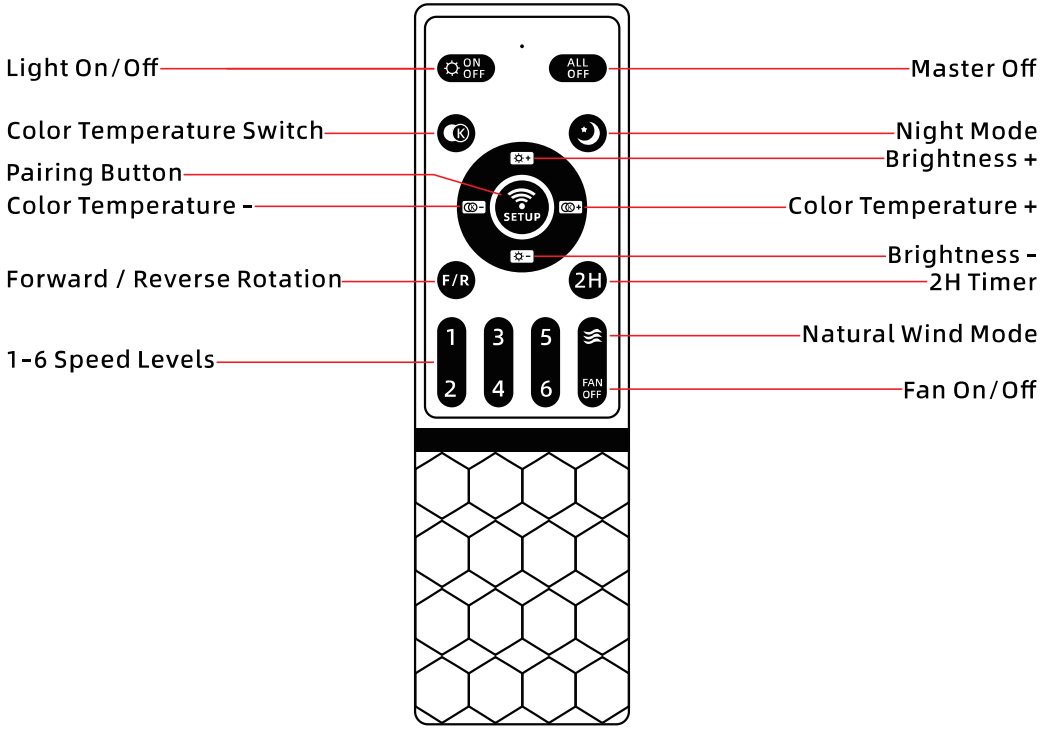


**Pairing Procedure:**
After powering on the light, press and hold the "SETUP" button within 5 seconds. The light will flash twice, indicating successful pairing. If the remote control does not work properly, check whether the batteries are installed correctly and have sufficient power. If the remote control will not be used for a long time, please remove the batteries to prevent leakage from damaging the remote.

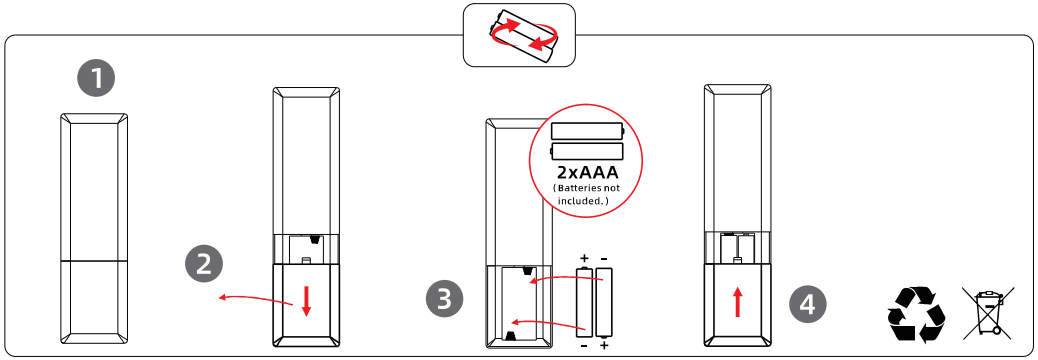


# Installation Steps

1.Scan the QR code to download "FanLamp Pro".

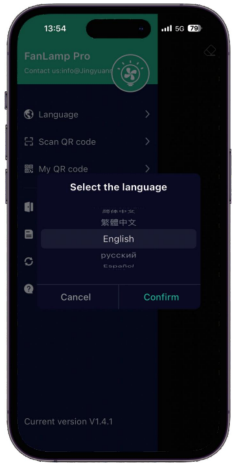


2.The APP supports multiple languages for operation.

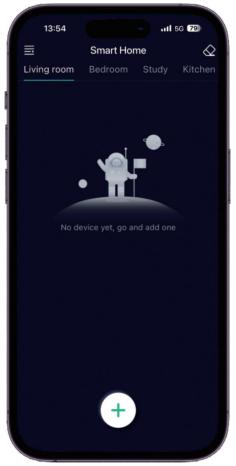


3.Select the "+" to add a device name.

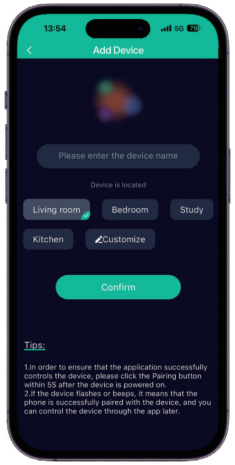


4.Set your preferred device name.

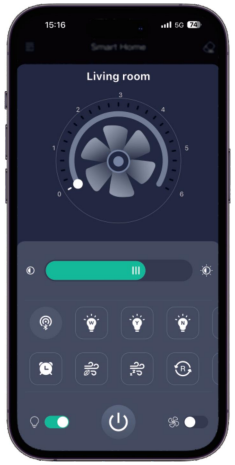


5.Turn on your phone's Bluetooth. Within 5 seconds of powering on the light, press the " " button. If the device flashes or beeps, it means it has been successfully paired with your phone.

