Widespread Lavatory Faucet With Retail Pop-Up

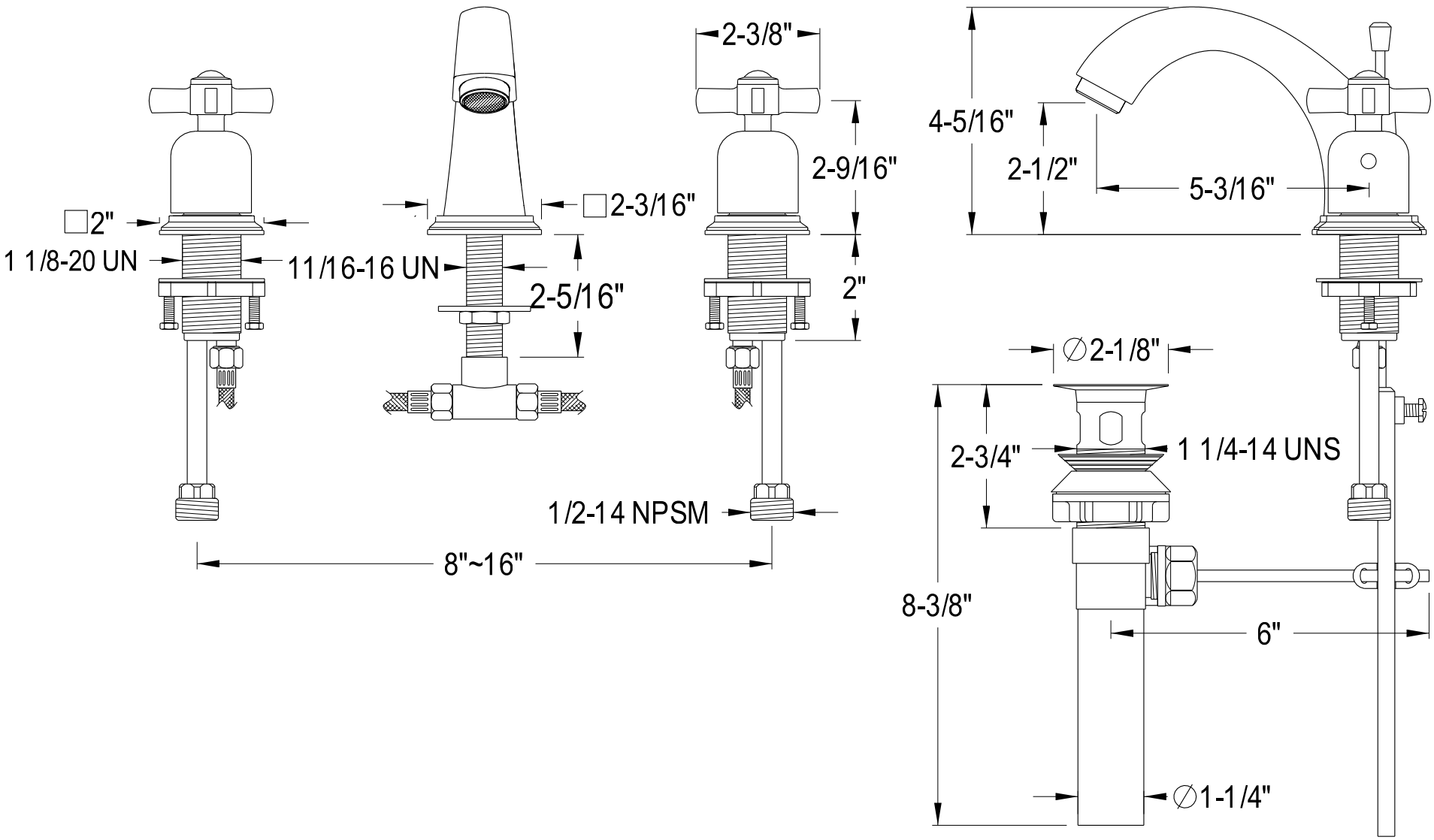

2018-02-A