16946-E

STOP

DO NOT RETURN TO THE STORE!

If you discover missing or damaged parts,
or if you have questions about the building process,
please reach out to us directly for the fastest service.

24/7 Support

help.backyardproducts.com

- Answers to frequently asked questions
- Technical assistance and how-to videos
- Submit a help request
- Request replacement parts

Business Hours

(734) 242-6900

Monday - Friday ..... 8:00am - 6:00pm EST
Saturday - Sunday .....Closed



Did you enjoy building your shed?

JOIN OUR TEAM

AND MAKE UP TO $1,500/WEEK*

Call a Recruiter Today! 734-365-7000



Flexible schedule



No selling,
just building



Bonus incentives
available



*based on number of completed installations

(This page intentionally left blank.)

Backyard Products, LLC
1000 Ternes Drive
Monroe, MI 48162

16946-E | 01/20/2026

ASSEMBLY MANUAL

GABLE 10' x 16' (304,8 x 487,7 cm)

ACTUAL FLOOR SIZE: 120" x 192" (304,8 x 487,7 cm)

KEEP THIS MANUAL FOR FUTURE REFERENCE

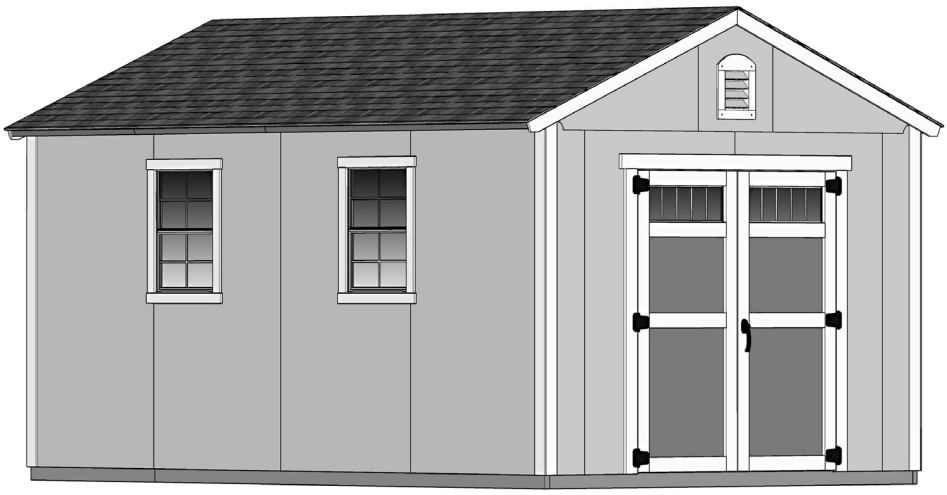

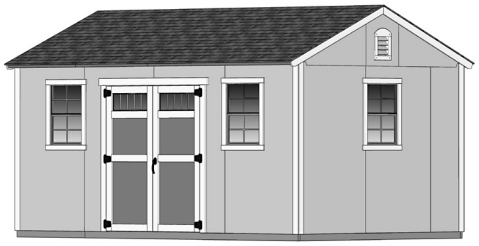

Eave Door with Optional Windows

(Instruction for window installation located in window kit.)

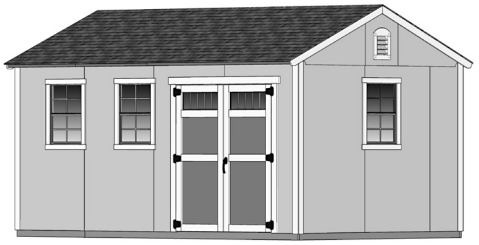

⚠ IMPORTANT! ⚠

READ INSTRUCTIONS THOROUGHLY PRIOR TO BEGINNING ASSEMBLY.

BEFORE YOU BEGIN

- **BUILDING RESTRICTIONS AND APPROVALS**

  Be sure to check local building department and homeowners association for specific restrictions and/ or requirements before building.

- **ENGINEERED DRAWINGS**

  Contact our Customer Service Team if engineered drawings are needed to pull local permits.

- **SURFACE PREPARATION**

  To ensure proper assembly you must build your shed on a level surface.

  Recommended methods and materials to level your shed are listed on page 14.

- **CHECK ALL PARTS**

  Inventory all parts listed on pages 4-6.

- **ADDITIONAL MATERIALS**

  You will need additional materials to complete your shed. See page 3 for required and optional materials and quantities.

******CONTACT OUR CUSTOMER SERVICE TEAM IF ANY PARTS ARE MISSING OR DAMAGED******

- Order form and warranty at back of manual -

Call: 1-734-242-6900 email: customerservice@backyardproducts.com

TOOLS

Required

Phillips Screwdriver

Drill / Driver
- 1/8" Drill Bit
- 1/4" Drill Bit
- 5/16" Drill Bit
- 1/2" Drill Bit
- #2 Philips Drive Bit

Hammer

Level

Pencil

Tape Measure

Square or

Utility Knife

Shingle Blades

Caulk Gun

Paint Tools

Safety Glasses

Hand Saw

Ladder

Optional

Tool Belt/ Nail Pouch

Tin Snips (for drip edge)

Chalk Line

Nail Gun
- gun nails

Gloves

Safety! Always use approved safety glasses during assembly.

HELPFUL REMINDER SYMBOLS

Look for these symbols for helpful reminders throughout this manual.

= Assistance Required; two or more people.

= Ensure squareness.

= Important required step or operation.

= Helpful assembly hint.

= Mark part with pencil.

BEGIN = Beginning of steps for assembly or installation.

FINISH = You have finished the assembly or installation.

= Level

ORIENT LUMBER AND TRIM FOR BEST APPEARANCE

Framing lumber is graded for structural strength and not appearance. Exterior trim is graded for one good side.

Always install the material leaving the best edge and best surface visible. Please remember that these blemishes in no way negatively affect the strength or integrity of our product. (See Fig. **A**, **B**, **C**.)

A

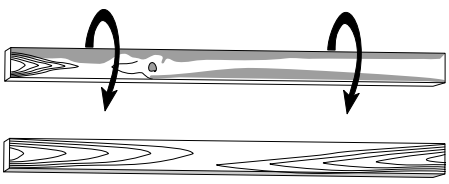

B

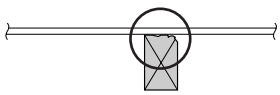

C

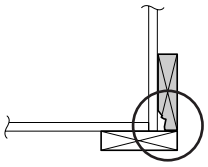

ADDITIONAL MATERIALS

FOUNDATION OR FLOOR MATERIALS

- **If your purchase comes with a floor system, the materials to construct your floor will be in a separate kit(s).**
- See the FLOOR LEVELING section on page 14 for recommended methods and suggested materials to properly level your floor, as this will vary depending on your specific site.

COMPLETING YOUR SHED

You will need these additional materials:

☐ **3-TAB SHINGLES ..... 8 Bundles**

☐ **PAINT FOR SIDING ..... 3 Gallons**
Use 100% acrylic latex exterior paint. (2) coats recommended.

☐ **CAULK ..... 4 Tubes**
Use acrylic latex exterior caulk that is paintable.



☐ **1" GALVANIZED ROOFING NAILS.... 5 Lbs**
For shingles.

☐ **PAINT FOR TRIM ..... 2 Quarts**
Use 100% acrylic latex exterior paint.

FRAMING NAILS

Boxed Nails	*–Or–*	*Nail Gun Strip/Coil Nails*
☐ **x7 lbs.**		☐ **x500**
☐ **x9 lbs.**		☐ **x1850**

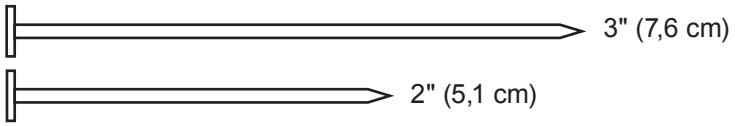

OPTIONAL MATERIALS

☐ **DRIP EDGE ..... 60 Feet**

☐ **#15 ROOFING FELT**
To cover 224 Sq. Ft. of roof area.

☐ **1" GALVANIZED ROOFING NAILS.....1/4 Lb**
For roofing felt.

REFER TO THE BACK OF THIS MANUAL AND THE MANUFACTURER'S INSTRUCTIONS FOR INSTALLATION OF SHINGLES, DRIP EDGE AND FELT.

PARTS IDENTIFICATION AND SIZES

Part identification letters are stamped on some parts.

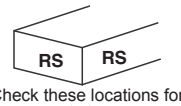

Check these locations for part stamp.

Treated lumber is stamped:

TREATED

WOOD SIZE CONVERSION CHART

Nominal Board Size	Actual Size
2 x 4	1-1/2" x 3-1/2" (3,8 x 8,9 cm)
1 x 4	3/4" x 3-1/2" (1,9 x 8,9 cm)
2 x 3	1-1/2" x 2-1/2" (3,8 x 6,3 cm)
1 x 3	3/4" x 2-1/2" (3,8 x 6,3 cm)

PARTS LIST

☑ **INVENTORY YOUR PARTS before you begin.**
We suggest sorting parts by the category they are listed in.

WALLS

- ☐ x1 GAA 1 x 3 x 5" (2,5 x 7,6 x 12,7 cm) Gauge Block for 3/4" (1,9 cm) measurement

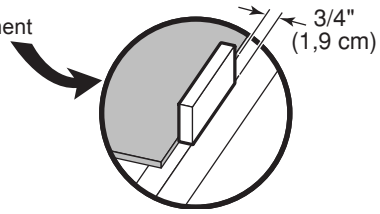

- ☐ x5 AL 2 x 4 x 7" (5,1 x 10,2 x 17,8 cm)
- ☐ x4 AF 2 x 4 x 18-1/8" (5,1 x 10,2 x 46 cm)
- ☐ x2 RP 2 x 4 x 20-1/2" (5,1 x 10,2 x 52,1 cm)
- ☐ x2 RL 2 x 4 x 24" (5,1 x 10,2 x 61 cm)
- ☐ x2 QS 2 x 4 x 32-1/2" (5,1 x 10,2 x 82,5 cm)
- ☐ x2 STL 2 x 4 x 44-1/2" (5,1 x 10,2 x 113 cm)
- ☐ x8 SP 2 x 4 x 48" (5,1 x 10,2 x 121,9 cm)
- ☐ x1 7/16" x 3-1/4" x 66-3/4" (1,1 x 8,3 x 169,5 cm) *OSB*
- ☐ x2 AM 2 x 4 x 67" (5,1 x 10,2 x 170,2 cm)
- ☐ x2 UM 2 x 4 x 68" (5,1 x 10,2 x 172,7 cm)
- ☐ x32 AI 2 x 4 x 78-1/2" (5,1 x 10,2 x 199,4 cm)
- ☐ x7 TM 2 x 4 x 72" (5,1 x 10,2 x 182,9 cm)
- ☐ x2 CGA 2 x 4 x 80-1/2" (5,1 x 10,2 x 204,5 cm)
- ☐ x4 TJ 2 x 4 x 92-1/2" (5,1 x 10,2 x 235 cm)
- ☐ x4 TP 2 x 4 x 96" (5,1 x 10,2 x 243,8 cm)

RAFTERS

- ☐ x16 6 x 24" (15,2 x 61 cm) **OSB OR WOOD GRAIN** ⚠
- ☐ x18 AD 2 x 4 x 65" (5,1 x 10,2 x 165,1 cm)

TRIM

- ☐ x2 VF 2 x 6 x 48" (5,1 x 16,2 x 121,9 cm)
- ☐ x2 WTC 2 x 6 x 49-3/4" (5,1 x 16,2 x 126,4 cm)
- ☐ x2 AUR 19/32" x 3-1/2" x 71-15/16" (1,5 x 8,9 x 182,7 cm)
- ☐ x2 AUL 19/32" x 3-1/2" x 71-15/16" (1,5 x 8,9 x 182,7 cm)
- ☐ x2 VX 2 x 6 x 96" (5,1 x 15,2 x 243,8 cm)
- ☐ x8 3/8 x 3-1/2 x 83-1/2" (1 x 8,9 x 212,1 cm)

FLOOR (if DIY floor kit(s) purchased)

☐ x4 TREATED 2 x 4 x 48" (5 x 10 x 122 cm)

☐ x4 TREATED 2 x 4 x 72" (5 x 10 x 183 cm)

☐ x18 TREATED 2 x 4 x 93" (5 x 10 x 236,2 cm)

Floor panels are 5/8" (1,6 cm) thick.

NOTE: Panel parts are not stamped.

☐ x3  5/8 x 48 x 96" (1,6 x 121,9 x 243,8 cm)

☐ x2  5/8 x 23-7/8 x 96" (1,6 x 60,6 x 243,8 cm)

2" (5,1 cm)

WALL PANELS

Wall panels are 5/8" (1,6 cm) thick.

NOTE: Panel parts are not stamped.

☐ x2  3/8 x 11-7/8 x 84" (1 x 30,2 x 213,4 cm)

☐ x3  3/8 x 23-7/8 x 84" (1 x 60,6 x 213,4 cm)

☐ x9  3/8 x 48 x 84" (1 x 121,9 x 213,4 cm)

☐ x1 

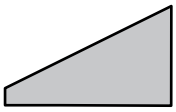

☐ x2

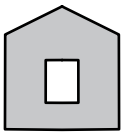

☐ x2

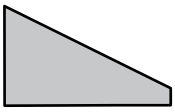

☐ x2

☐ x1 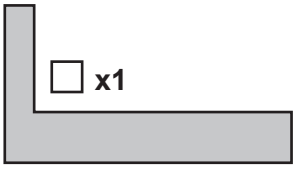

ROOF PANELS

Roof panels are 7/16" (1,1 cm) thick.

NOTE: Panel parts are not stamped.

☐ x4 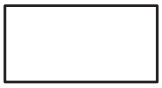 23-1/2" x 48 (59,7 x 121,9 cm)

☐ x4 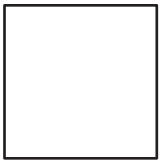 47-7/8" x 48" (121,6 x 121,9 cm)

☐ x2 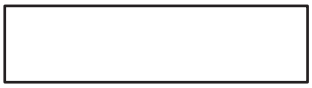 23-1/2" x 96" (59,7 x 243,8 cm)

☐ x2  48" x 96" (121,9 x 243,8 cm)

DOORS

☐ x4 EFF
5/4 x 3-1/2 x 24-5/8" (3,2 x 8,9 x 62,5 cm)

☐ x2 OO
69" Door Stiffener (175,3 cm)

☐ x2 NUC
1 x 4 x 69-1/4" (2,5 x 10,2 x 175,9 cm)

☐ x2 . . DJD . . . .
5/4 x 3-1/2 x 72-3/8" (3,2 x 8,9 x 183,8 cm)

☐ x1 FPA
5/4 x 3-1/2 x 74" (3,2 x 8,9 x 188 cm)

☐ x1 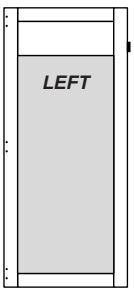

☐ x1 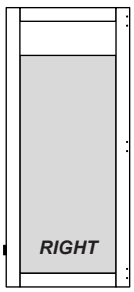

FASTENER/HARDWARE BAG

- ☐ **x85** 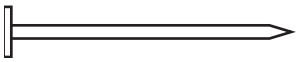 1-1/2" (3,8 cm)
- ☐ **x155** 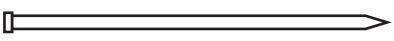 2" (5,1 cm)
- ☐ **x102**  3" (7,6 cm)
- ☐ **x25**  2" (5,0 cm)
- ☐ **x82**  1-1/4" (3,2 cm)
- ☐ **x85**  3/4" (1,9 cm)

NOTE:
If you are using a nail gun, nails may be used where screws are shown for quicker assembly. Length of nail must match screw length.

VENTS, WINDOW and DOOR HARDWARE

☐ **x2**

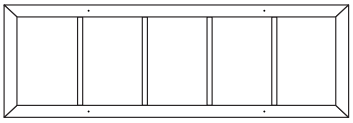

Transom Window

☐ **x2**

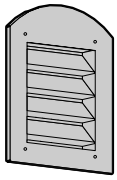

☐ **x8**

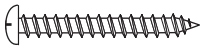

#8 x 1" (2,5 cm)
Pan Head Screws

☐ **x2**

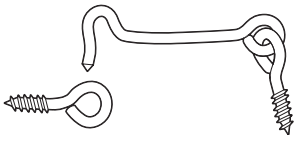

☐ **x1**



64" Metal Threshold

 3/4" (1,9 cm) x11
Bagged seperately / special coating

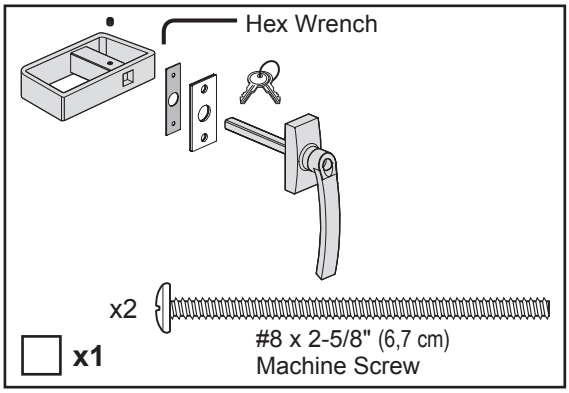

☐ **x1**

☐ **x6**   Square Drive Bit

☐ **x42** 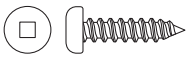
1" (2,5 cm) #14 Screws

☐ **x12** 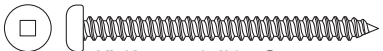
3" (2,5 cm) #14 Screws

☐ **x2** 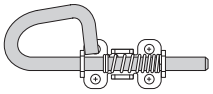

☐ **x8**  3/4" (1,9 cm)

COMPONENT SECTION INDEX

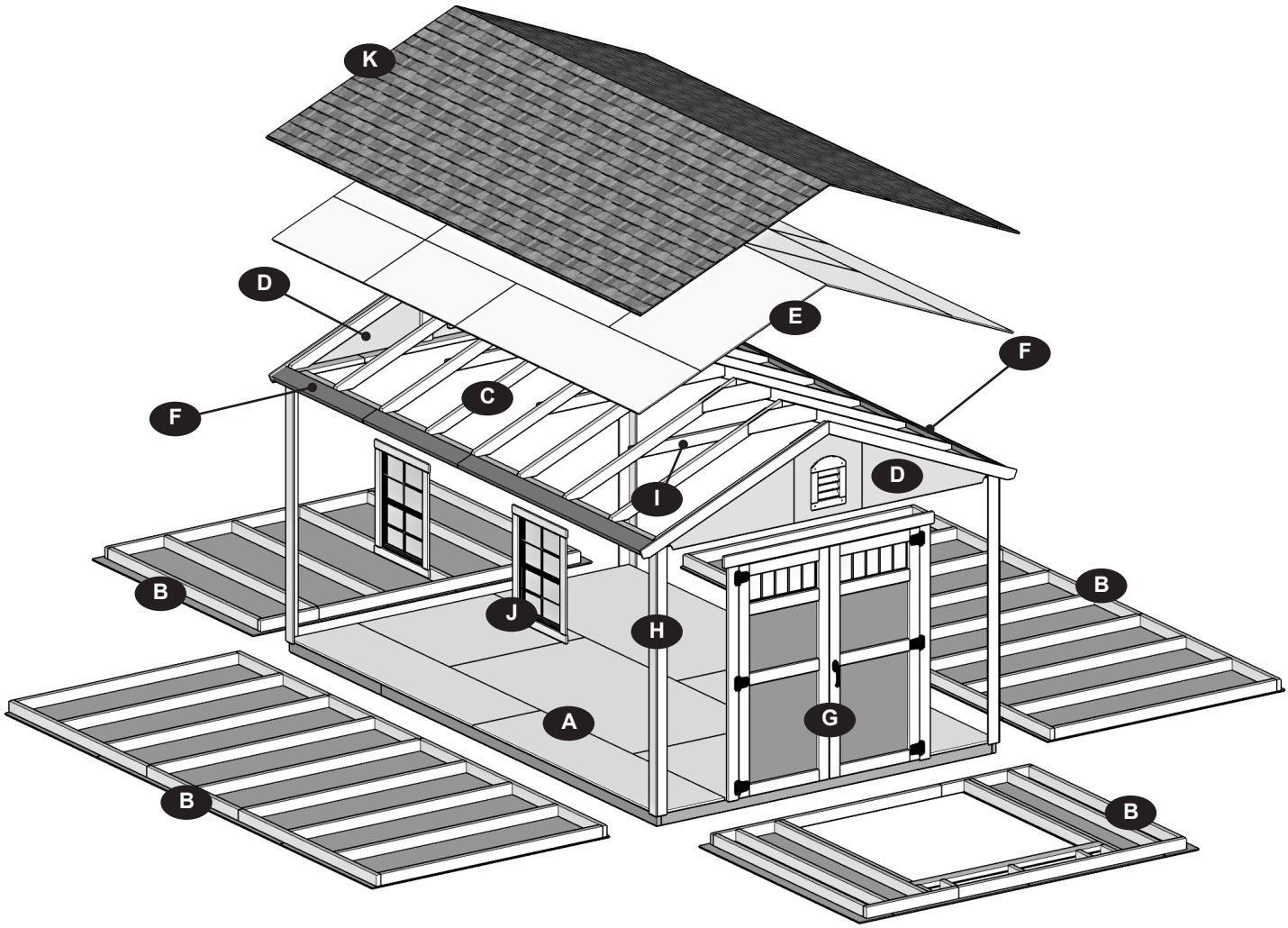

Description	Section	Page
Floor	A	9-16
Walls	B	19
Rafters	C	42-43
Gable Units	D	44-45
Roof Panels	E	46
Soffit Trim	F	50
Doors	G	52
Corner Trim	H	61
Collar Ties	I	62
Windows	J	18
Shingles	K	67

CONCRETE FOUNDATION

If you choose to install your kit on a concrete slab refer to the diagram below.

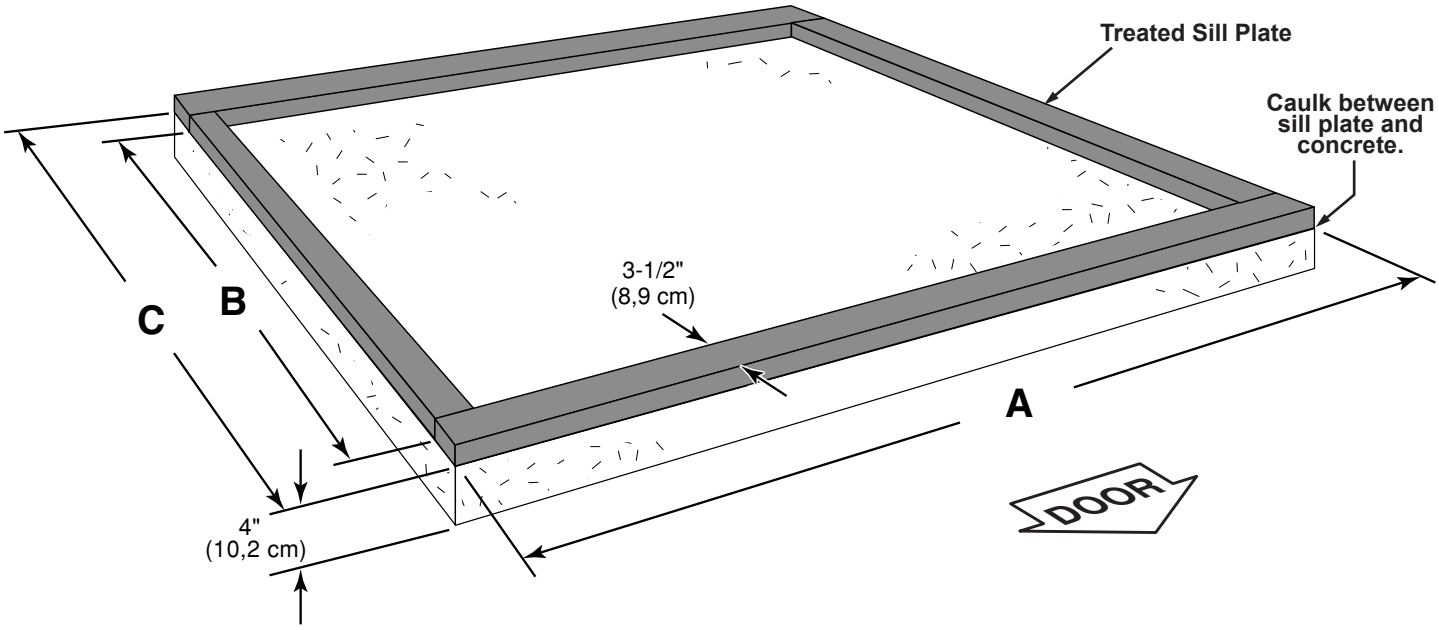

Building Size	Actual Size	A	B	C
10' x 16' (304,8 x 487,7 cm)	120" x 192" (304,8 x 487,7 cm)	120" (304,8 cm)	185" (469,9 cm)	192" (487,7 cm)

10' x 16' Building Requires:

- ☐ **x2 2 x 4 x 10' (5,1 x 10,2 x 304,8 cm)**
- ☐ **x1 Caulk**
- ☐ **x2 2 x 4 x 16' (5,1 x 10,2 x 487,7 cm)** Cut to: 185" (469,9 cm)
  MUST be treated lumber.

⚠ Allow new concrete slabs to cure for at least seven (7) days.

- A treated 2 x 4 (5,1 x 10,2 cm) sill plate is required when installing your shed on concrete. **Hint: Purchase full length treated lumber.**
- Use a high quality exterior grade caulk beneath all sill plates.
- Fasten 2 x 4 (5,1 x 10,2 cm) sill plates to slab using approved concrete anchors **(fasteners not included)**.
- Check local code for concrete foundation requirements.

NOTES

BUILD YOUR OWN WOOD FLOOR OPTION

(Materials not included.)

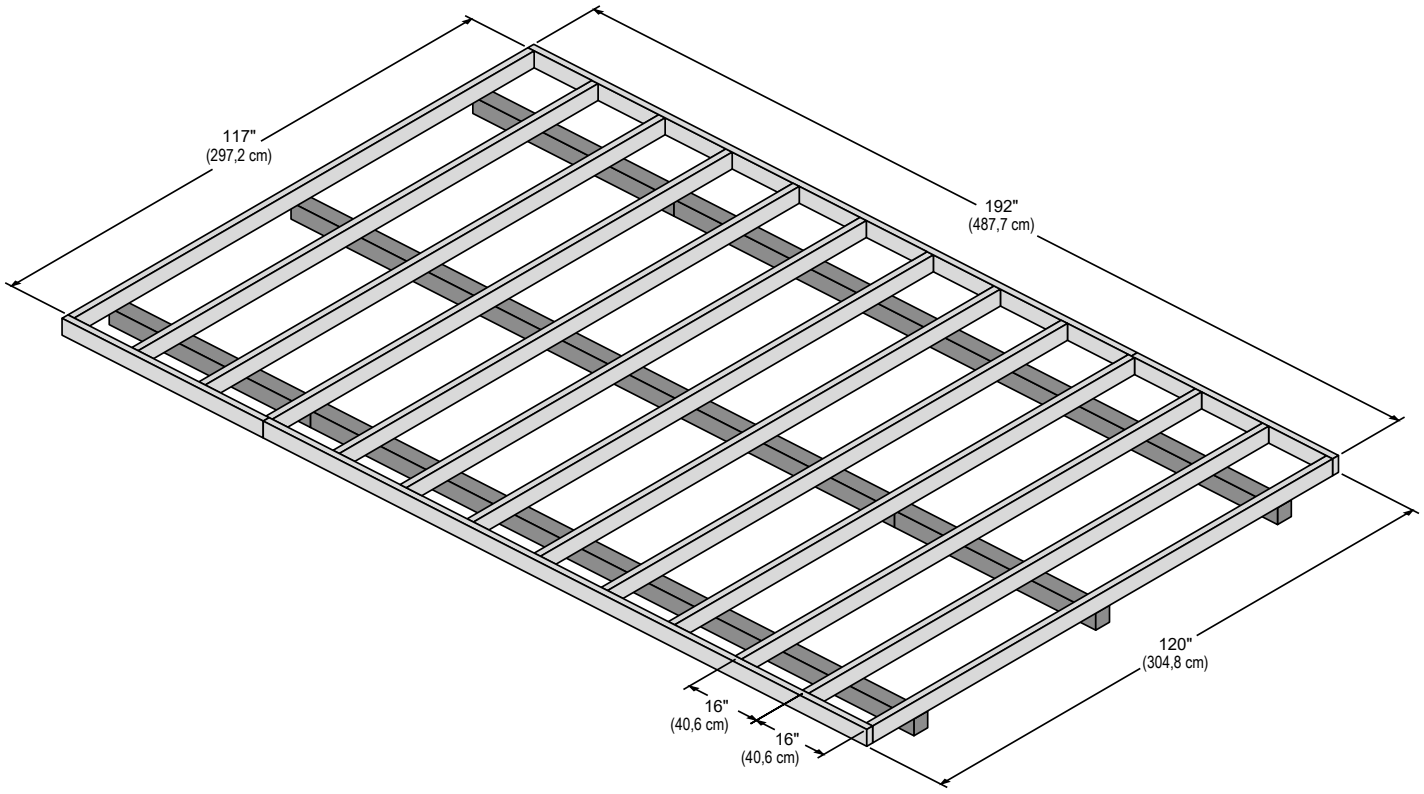

MATERIAL REQUIRED

- ☐ **x1** 2 x 4 x 8' (5,1 x 10,2 x 243,8 cm) — **MUST be treated lumber**
- ☐ **x2** 2 x 4 x 12' (5,1 x 10,2 x 365,8 cm) — **MUST be treated lumber**
- ☐ **x13** 2 x 4 x 10' (5,1 x 10,2 x 304,8 cm) — **MUST be treated lumber**
- ☐ **x4** 4 x 4 x 12' (10,2 x 10,2 x 365,8 cm) — **MUST be treated lumber**

☐ **x5**  5/8" x 48" x 96" (1,6 x 121,9 x 243,8 cm)

☐ **x2** 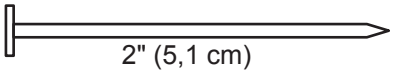

1 lb. of 2" (5,1 cm) Hot Dipped Galvanized Box-Type Nails

☐ **x52** 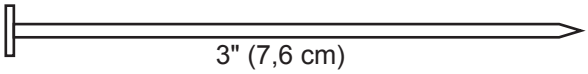

40 Nails - 3" (7,6 cm) Hot Dipped Galvanized Box-Type Nails

☐ **x78** 

Screws for Frame to 4"x 4"
Minimum 3" screws / exterior grade.

BUILD YOUR OWN WOOD FLOOR OPTION

STOP!

⚠ LEVEL AND SQUARE FLOOR FRAME ⚠

Before attaching floor decking, it is important to level and square the floor frame.
A level and square floor frame is required to correctly construct your shed.

STOP!

BEGIN

1 ⚠ See page 14 for the preferred floor leveling method.

2 Use a level to ensure that the floor frame is level before installing floor panels.

3 Check for frame squareness by measuring diagonally across corners.
If the measurements are the same, the frame is square.
The diagonal measurement will be approximately 226-7/16" (575,2 cm).

4 When the frame is level and square, secure one side of frame to the 4x4 runners with (1) fastener at the end of each runner. Move to the opposite end of the frame. Secure the frame to 4x4 runners with one fastener at ends of each runner making sure the frame remains square **(Fig. A)**.

Fig. A

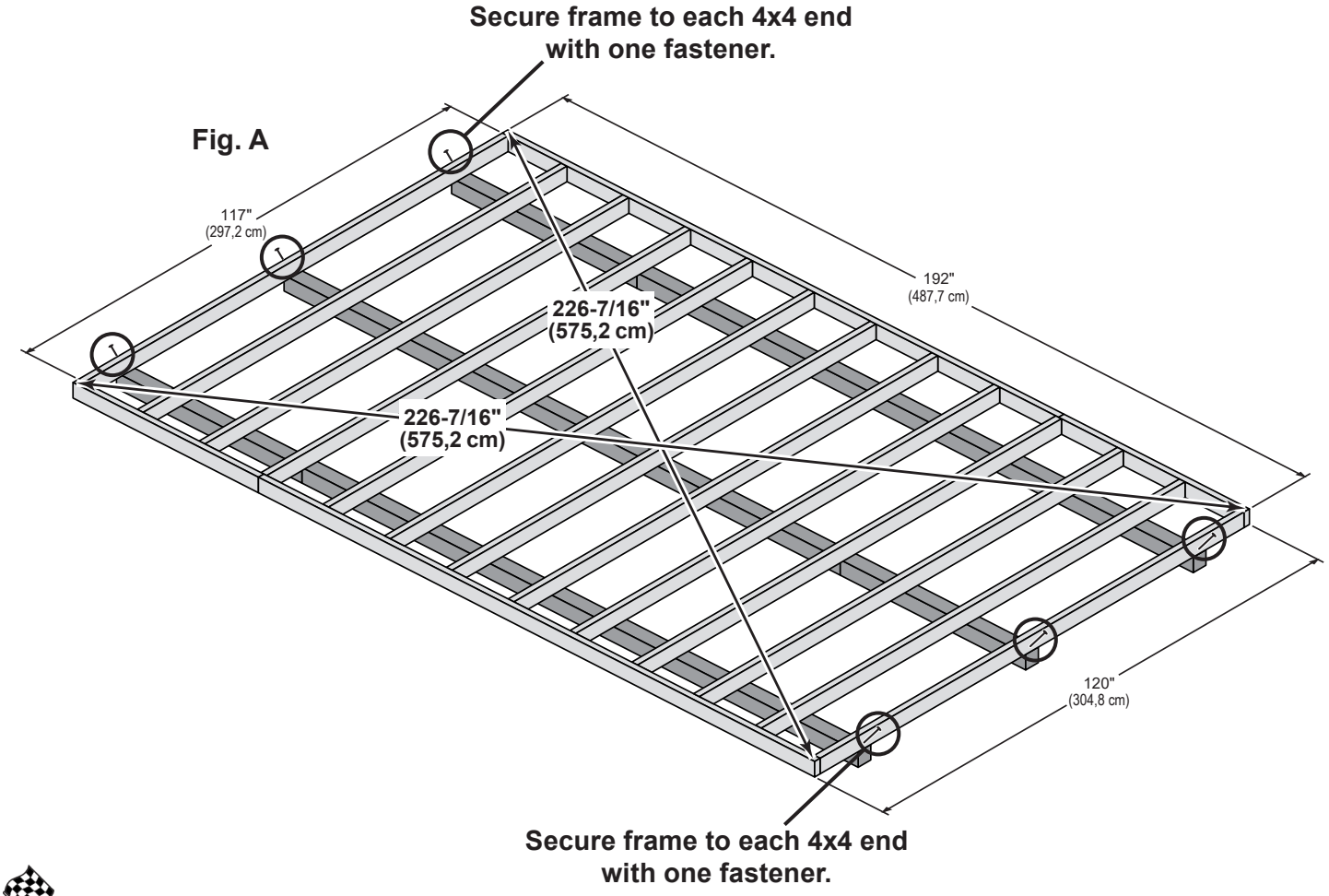

FINISH

Your floor frame is secured to 4x4 runners and is now square.

FLOOR FRAME (if DIY floor kit(s) purchased)

PARTS REQUIRED:

x80 3" (7,6 cm)

x4 TREATED 2 x 4 x 48" (5 x 10 x 122 cm)

x4 TREATED 2 x 4 x 72" (5 x 10 x 183 cm)

x18 TREATED 2 x 4 x 93" (5 x 10 x 236,2 cm)

NOTE: Look for TREATED Stamp.



You will build two floor sections.

BEGIN

1 Arrange parts as shown on flat surface.
Measure and mark each dimension from end of boards.
Secure with (2) 3" nails at each mark and (4) nails at seams.



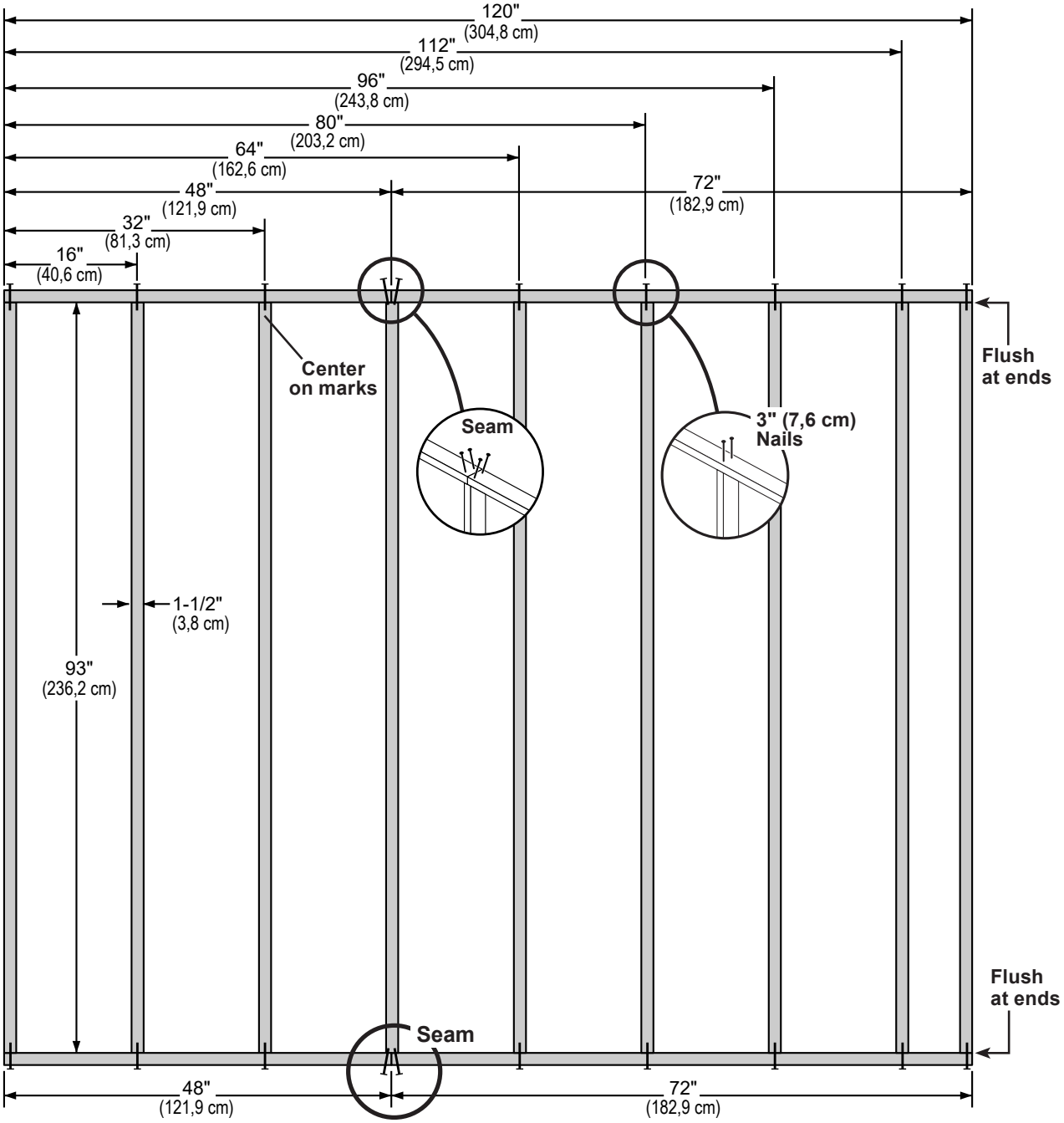

Repeat to build your 2nd floor section.

FLOOR FRAME (if DIY floor kit(s) purchased)

PARTS REQUIRED:

x30 3" (7,6 cm)

2 Fasten floor sections together, as shown. Secure with 3" nails.

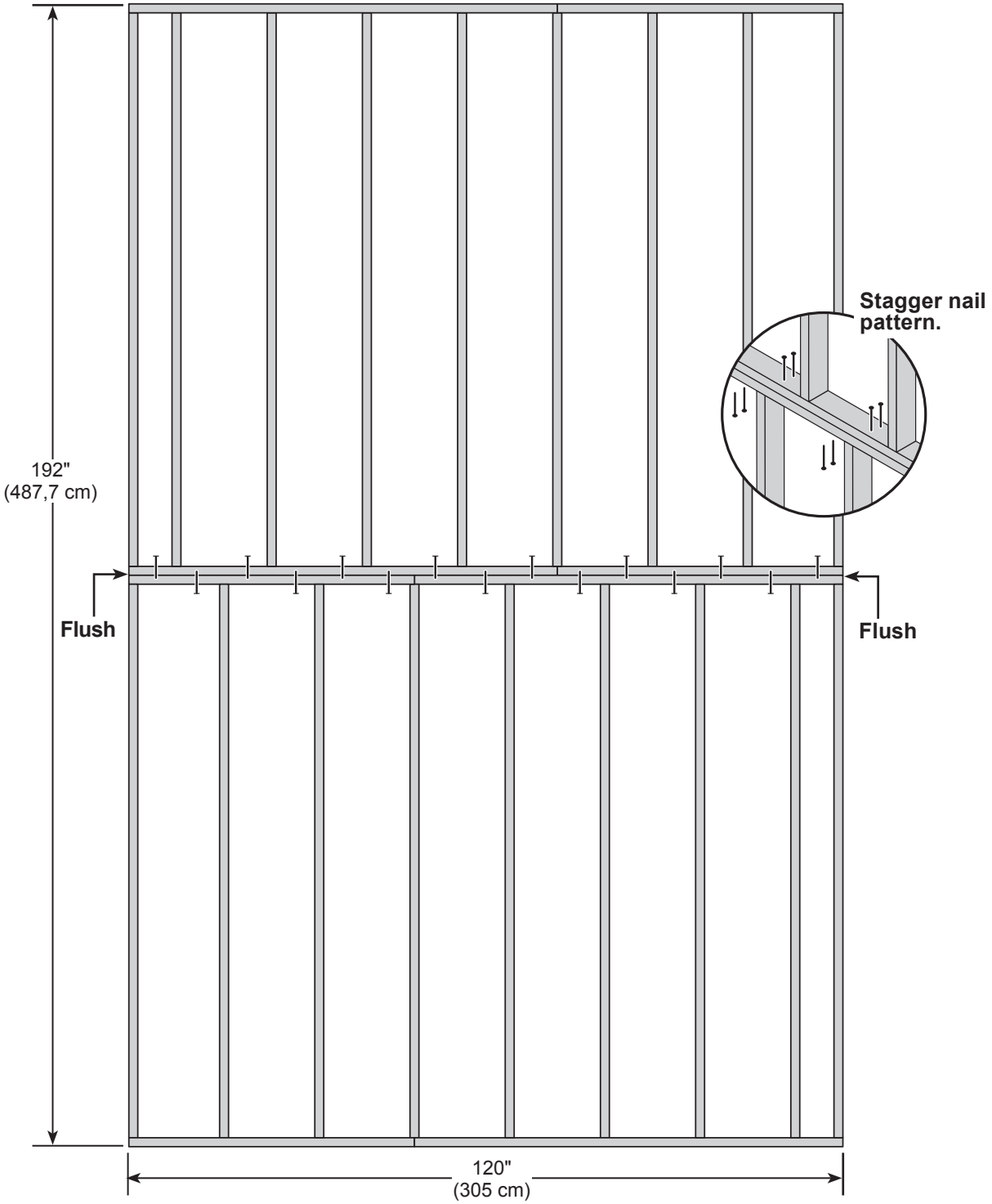

FINISH

Your floor frame is now assembled. Proceed to level and square frame.

⚠ *LEVEL AND SQUARE FLOOR FRAME* ⚠

STOP! STOP!

Before attaching floor decking, it is important to level and square the floor frame.
A level and square floor frame is required to correctly construct your shed.

BEGIN

1 ⚠ See page 14 for the preferred floor leveling method.

2 Use a level to ensure that the floor frame is level before installing floor panels.

3 Check for frame squareness by measuring diagonally across corners.
If the measurements are the same, the frame is square.
The diagonal measurement will be approximately 226-7/16" (575,2 cm)\.

4 When the frame is level and square, secure one side of frame to the 4x4 runners with (1) fastener at the end of each runner.
Move to the opposite end of the frame.
Secure the frame to 4x4 runners with one fastener at ends of each runner making sure the frame remains square **(Fig. A)**.

Fig. A

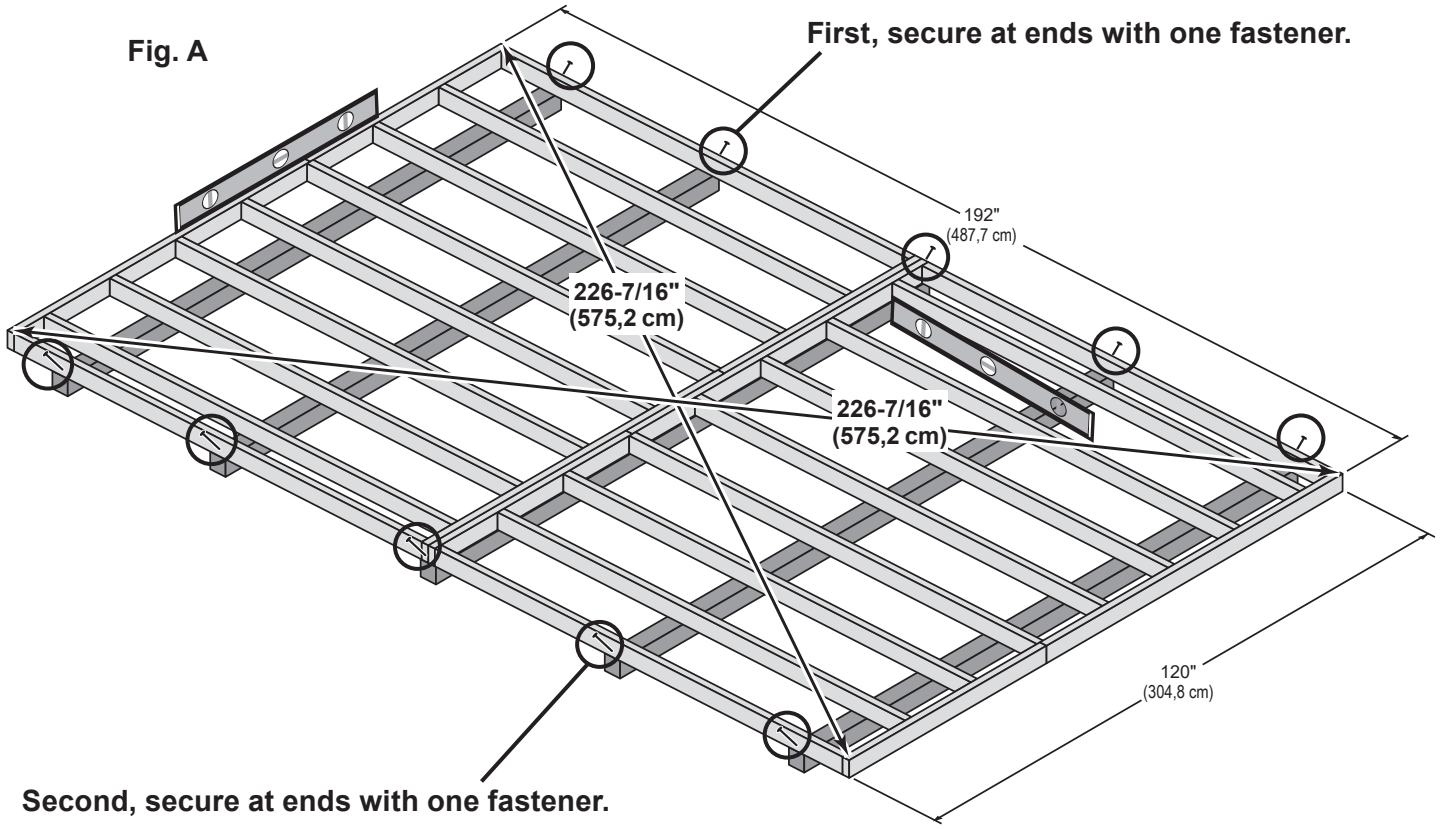

FINISH

Your floor frame is secured to 4x4 runners and is now square.

OPTIONAL WOOD FRAME FLOOR LEVELING OPTIONS

There are multiple ways to level your floor frame. Our recommended leveling method is shown below.
Leveling materials are not included in this kit.

PREFERRED METHOD - 4x4 TREATED RUNNERS (Typical for 10' x 16' Kit)

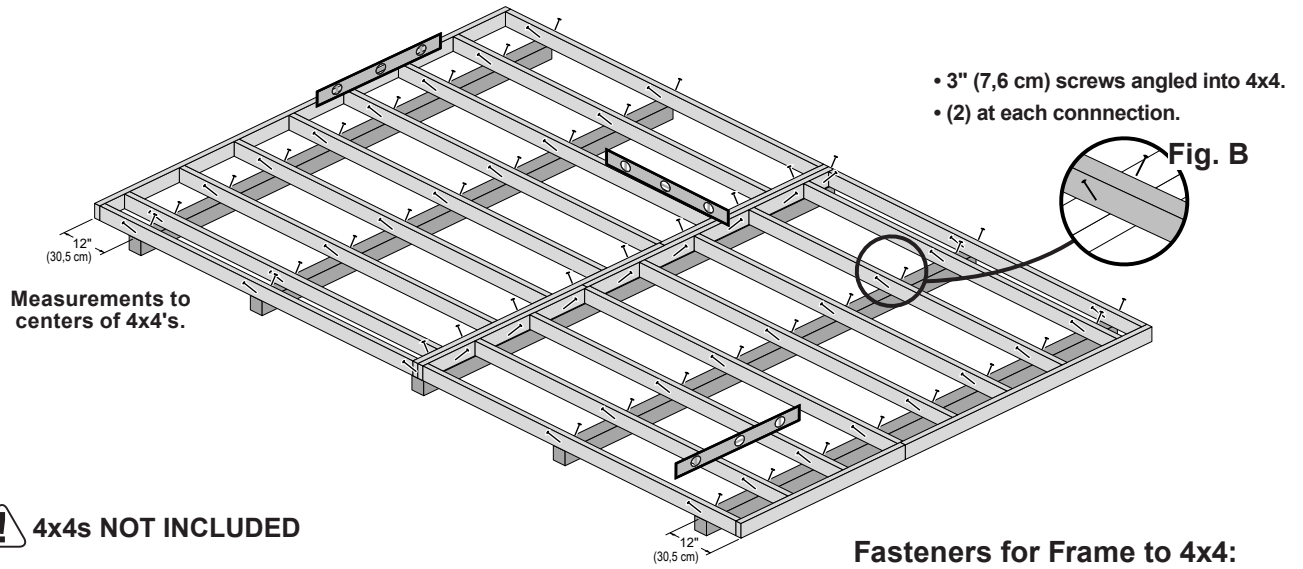

4x4s NOT INCLUDED

MATERIAL REQUIRED:

☐ **x5** 4 x 4 x 10' (10,2 x 10,2 x 304,8 cm) Treated Lumber

Fasteners for Frame to 4x4:

(3" Screws shown as one option.)
Minimum 3" screws / exterior grade.

x90 ☐ 3" (7,6 cm)

Use only wood treated for ground contact and fasteners approved for use with treated wood.

Always support frame seams.

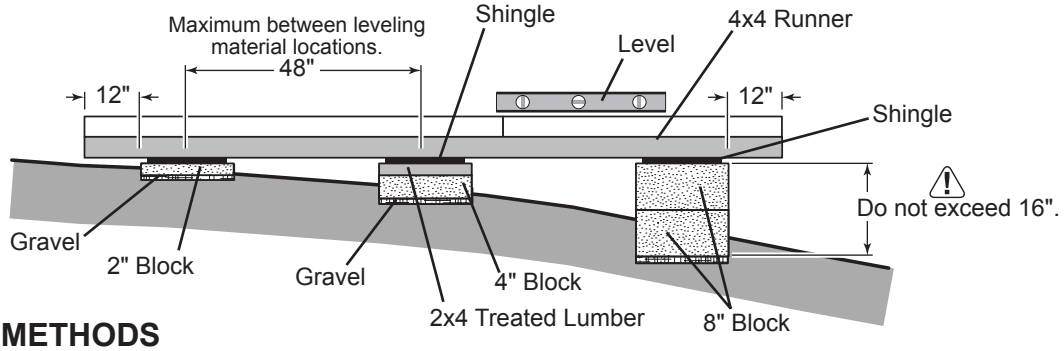

LEVELING METHODS

- **Level under 4x4 runners only.**
- **Locate leveling material 12" from ends of runners and no more than 48" apart.**
- **Asphalt shingles should be used between 4x4 runners and blocks or treated lumber. Never use shingles in direct contact with ground.**
- **For best results and aiding in water drainage use gravel under each concrete block.**

LEVELING MATERIALS

☐ **Gravel**

☐ **Solid Masonry Blocks in 1", 2", 4" or 8" thickness**

☐ **2x4 Treated Lumber**

☐ **Asphalt Shingles**

Leveling higher than 16" not recommended.

FLOOR FRAME (if DIY floor kit(s) purchased)

PARTS REQUIRED:

x2

5/8 x 23-7/8 x 96"
(1,6 x 60,6 x 243,8 cm)



3/4" GAUGE BLOCK

x8

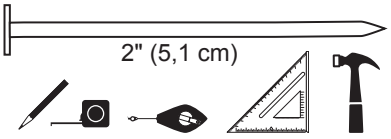

Install floor panels with the rough side facing up (painted grid lines).

BEGIN

1 Install (1) **23-7/8" x 96"** panel on one of the 96" x 144" floor frame sections, edge flush to the seam between the floor frames and 3/4" along the floor joist.
Use the GAA gauge block for the 3/4" measurement.
Secure panel with (1) 2" nail in the first two corners on inner bond board, as shown.

2 Move to the opposite side. Using the long edge of the panel as a lever, move the panel side-to-side until the loose corner is flush to the floor frame. Secure panel with (2) more nails in the opposite corners.

Repeat steps to install the next 23-7/8" x 96" panel.

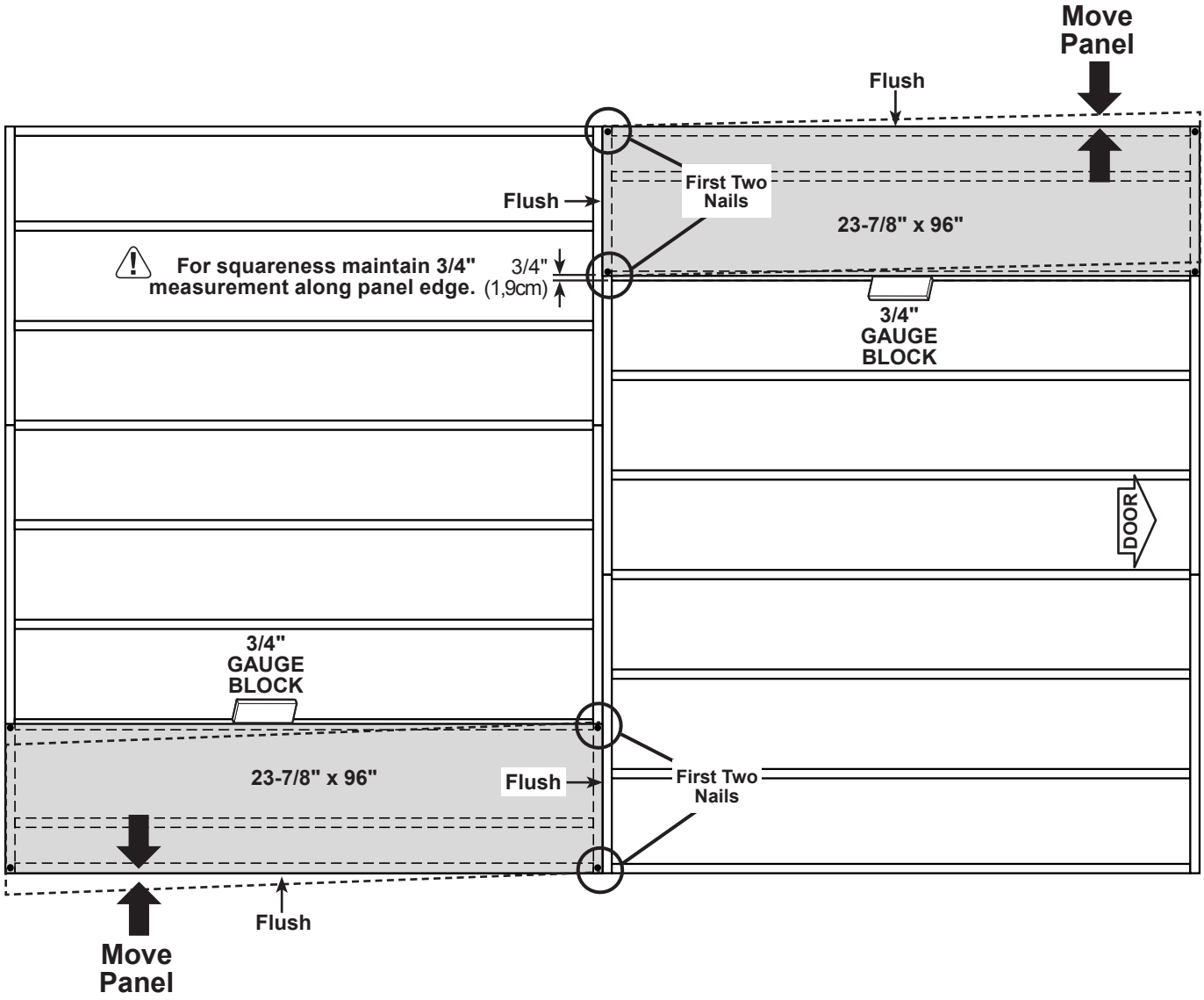

FLOOR FRAME (if DIY floor kit(s) purchased)

PARTS REQUIRED:

x4



5/8 x 48 x 96"
(1,6 x 121,9 x 243,8 cm)



3/4" GAUGE BLOCK

x334

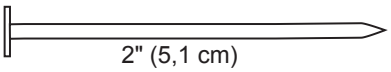

2" (5,1 cm)

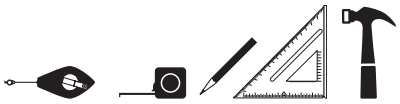

3 Continue installing the remaining panels in the following order:
1. 48 x 96" (A and B)
2. 48 x 96" (C)

Secure panels with (1) 2" nail in each corner. All panels should be flush, as shown.

4 Ensure the floor is square by measuring diagonally across the frame corners. If the measurements are the same your floor frame is square. The measurement will be approximately 187-1/2" (476,3 cm).

5 Continue securing all panels with 2" nails spaced 6" apart on edges and 12" apart inside panel.

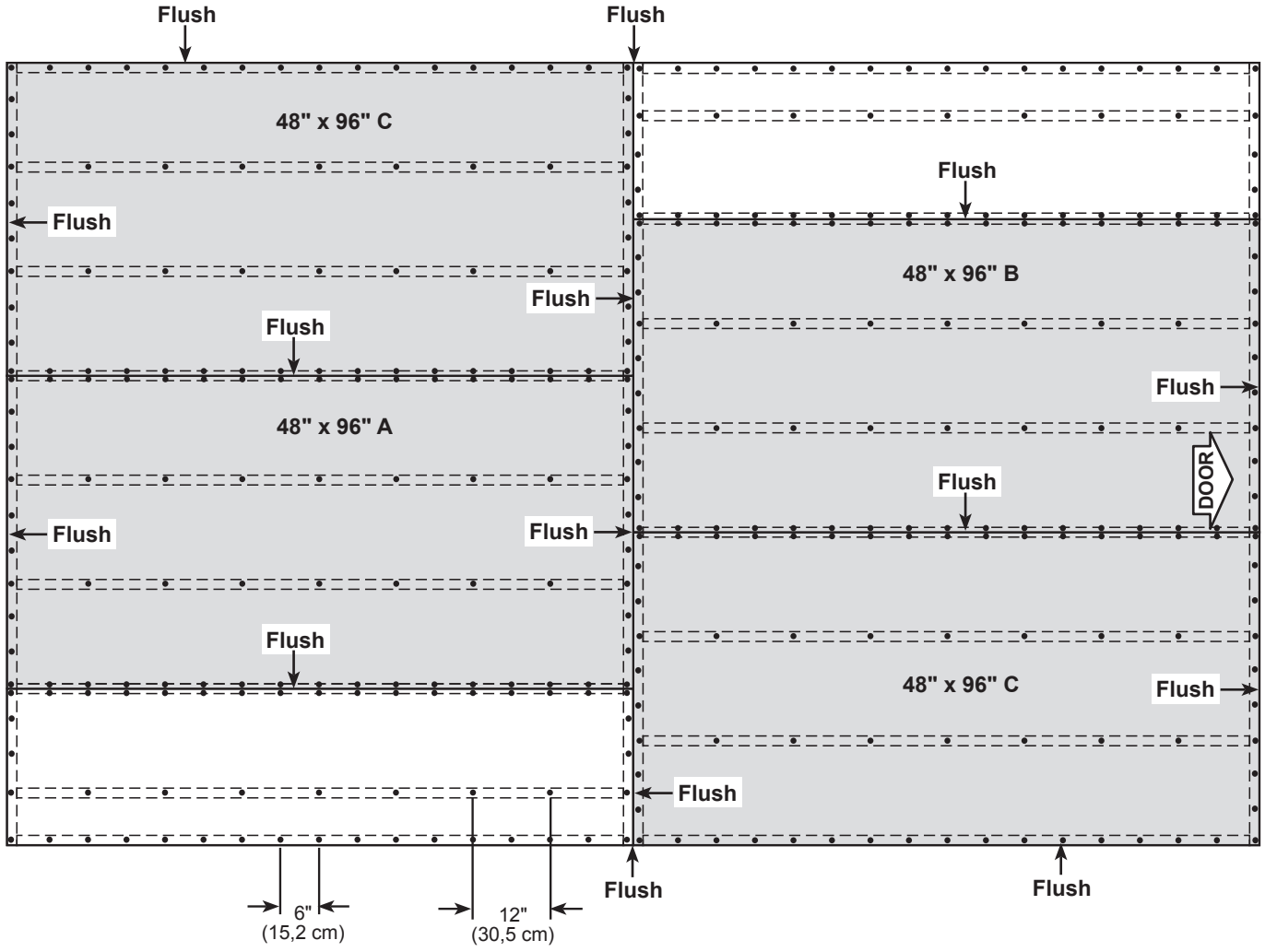

FINISH

Your floor panels are now installed.

IMPORTANT!

STOP! **Ensure that the floor frame is level after installing floor panels.**
Re-level if necessary.

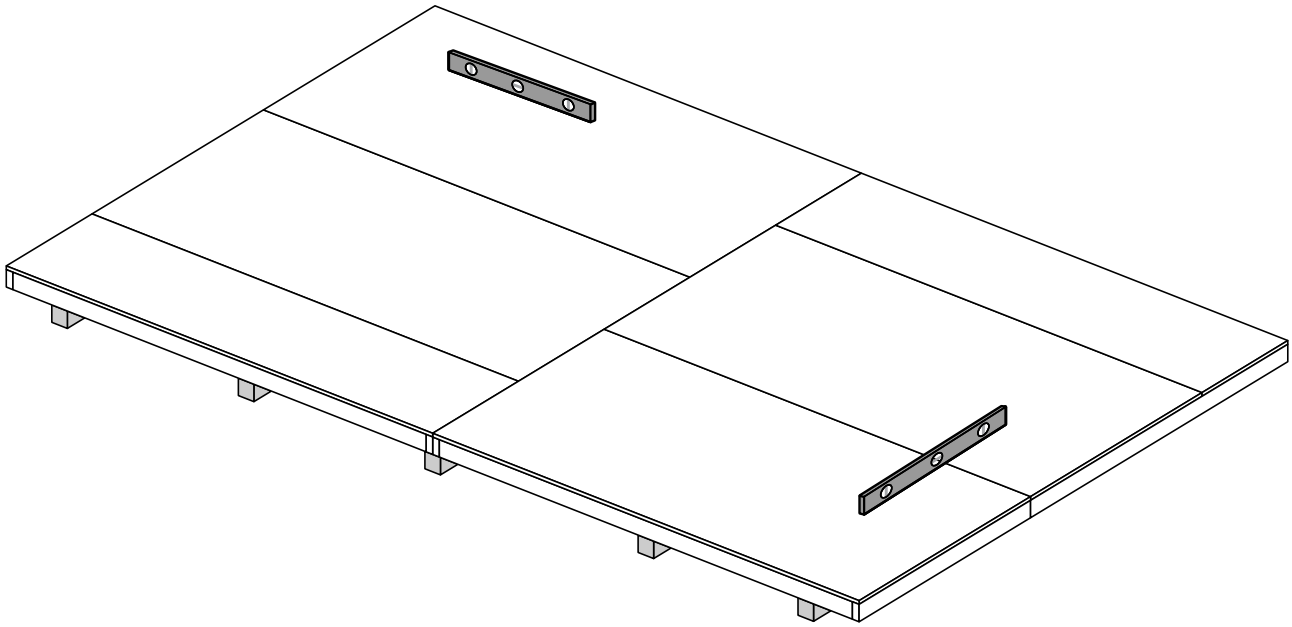

HINT:

- **The floor should used as a stable work surface for wall construction.**
- **Organize your assembly procedure during the build process to avoid over-handling of the walls.**

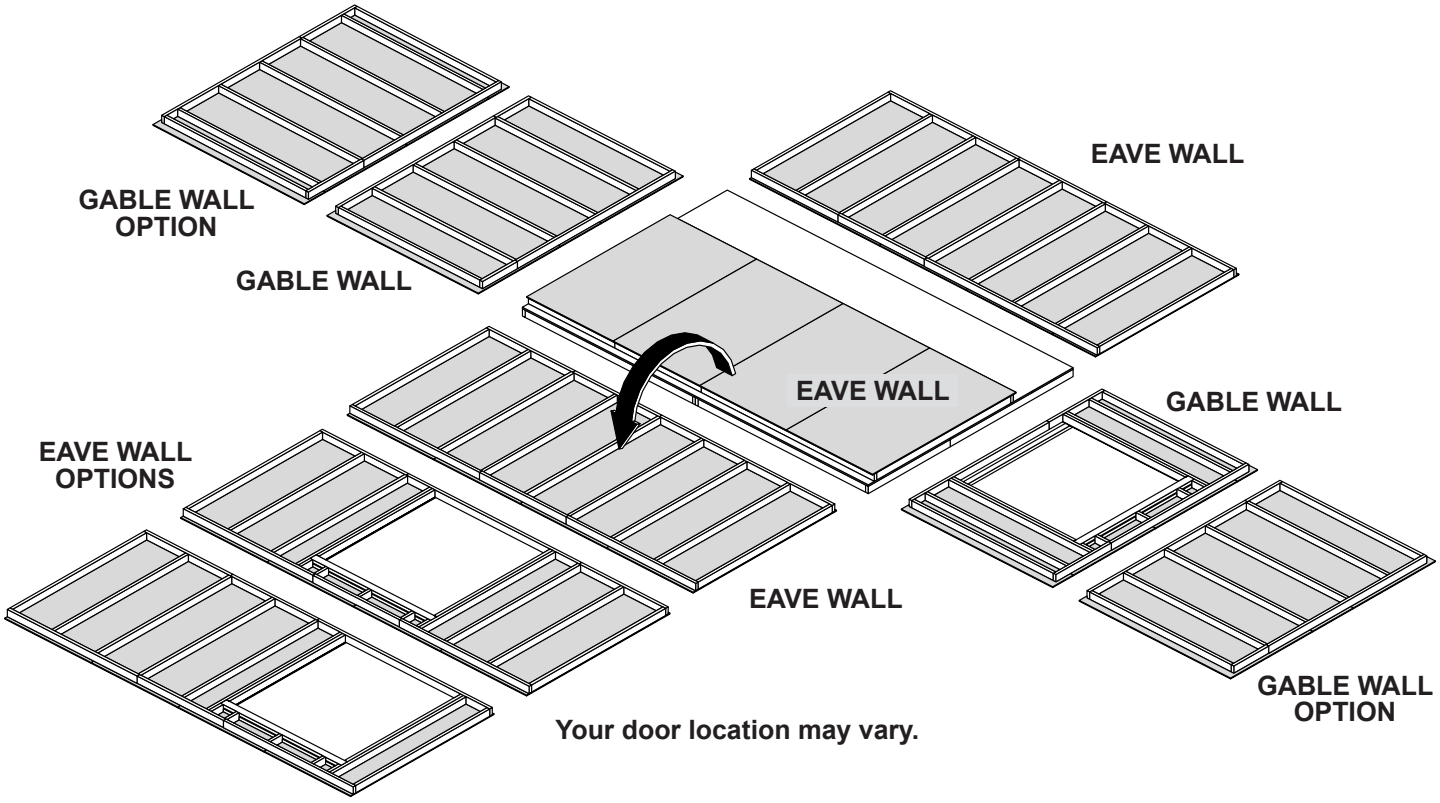

WINDOW INSTALLATION

If you purchased a shed with one or more windows, please see instructions located in the window kit for installation.

You will install windows after your shed is assembled.

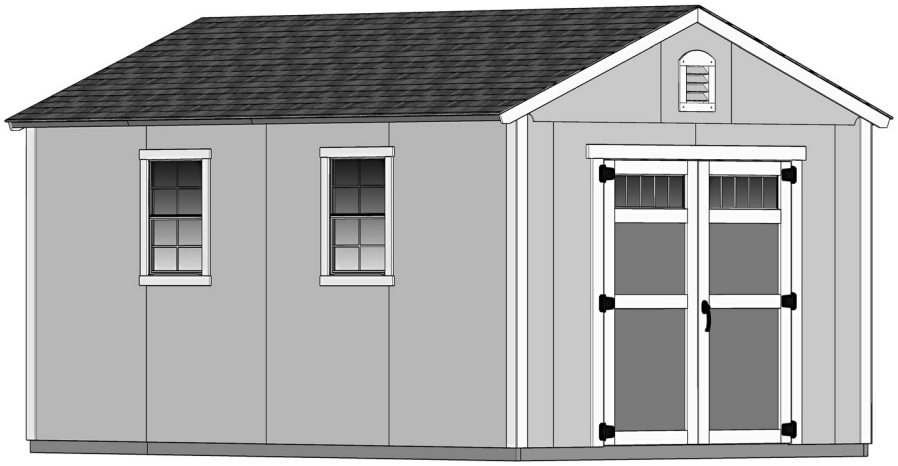

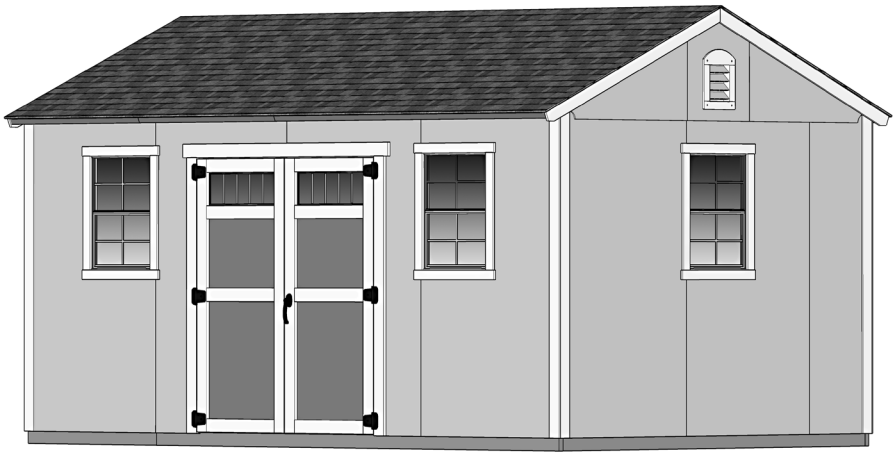

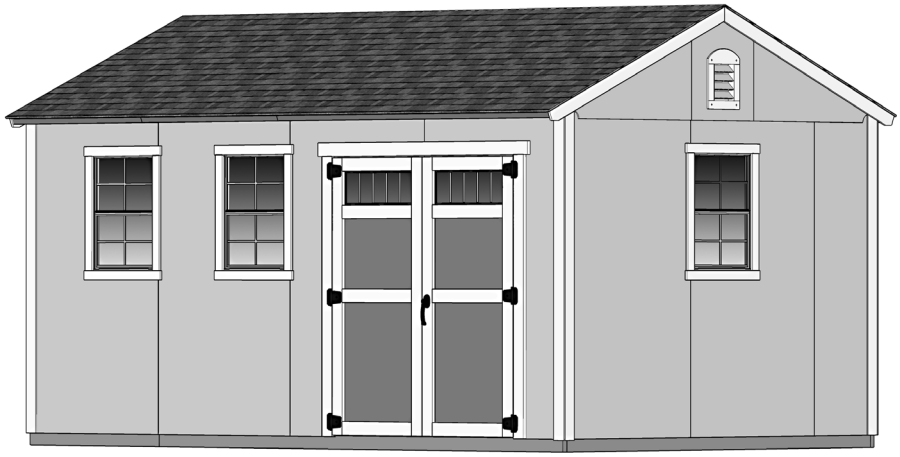

WALL INDEX

Create your own style of shed. Choose your door location.
Use this guide to find the corresponding wall construction and installation pages.

IMPORTANT! Build your door header before building any walls (see next page).

After assembling the walls for your 10' x 16' shed,
go to page 37 for wall installation.

Door on Gable Wall

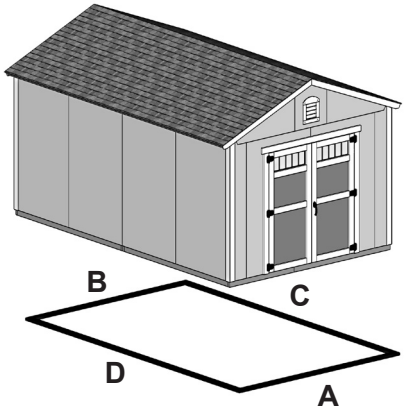

Wall A: Page 23
Wall B: Page 25
Wall C: Page 27
Wall D: Page 29

Eave Door Centered

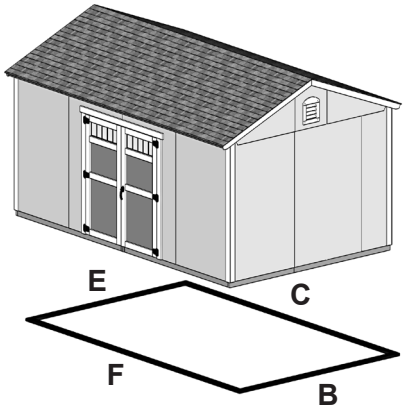

Wall B: Page 25
Wall C: Page 27
Wall E: Page 31
Wall F: Page 33

Eave Door w/ Right Offset

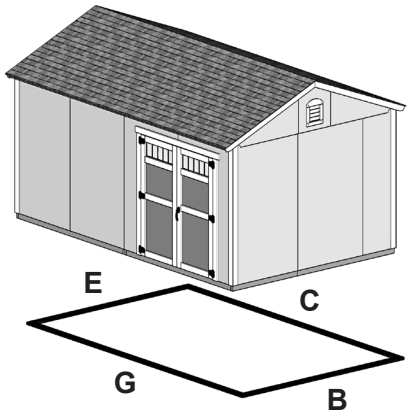

Wall B: Page 25
Wall C: Page 27
Wall E: Page 31
Wall G: Page 35

DOOR FRAME UNIT

STOP!

Assemble the door frame unit before building any walls!

Any wall with a door will require this assembly.

STOP!

PARTS REQUIRED:

x2 **AM**
2 x 4 x 67" (5,1 x 10,2 x 170,2 cm)

x1
7/16 x 3-1/4 x 66-3/4" (1,1 x 8,3 x 170,2 cm) *OSB*

x18
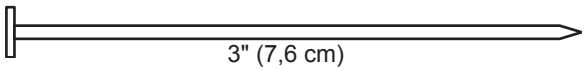

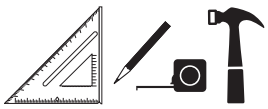

Pre-assemble the door header.

BEGIN

1 Place (1) **AM** and *OSB* end-to-end on flat surface, flush in middle.
Center ***OSB*** on top of **AM**.

Fasten together with 3" nails in the pattern shown.

2 Flip header assembly over and nail as shown on the other side.

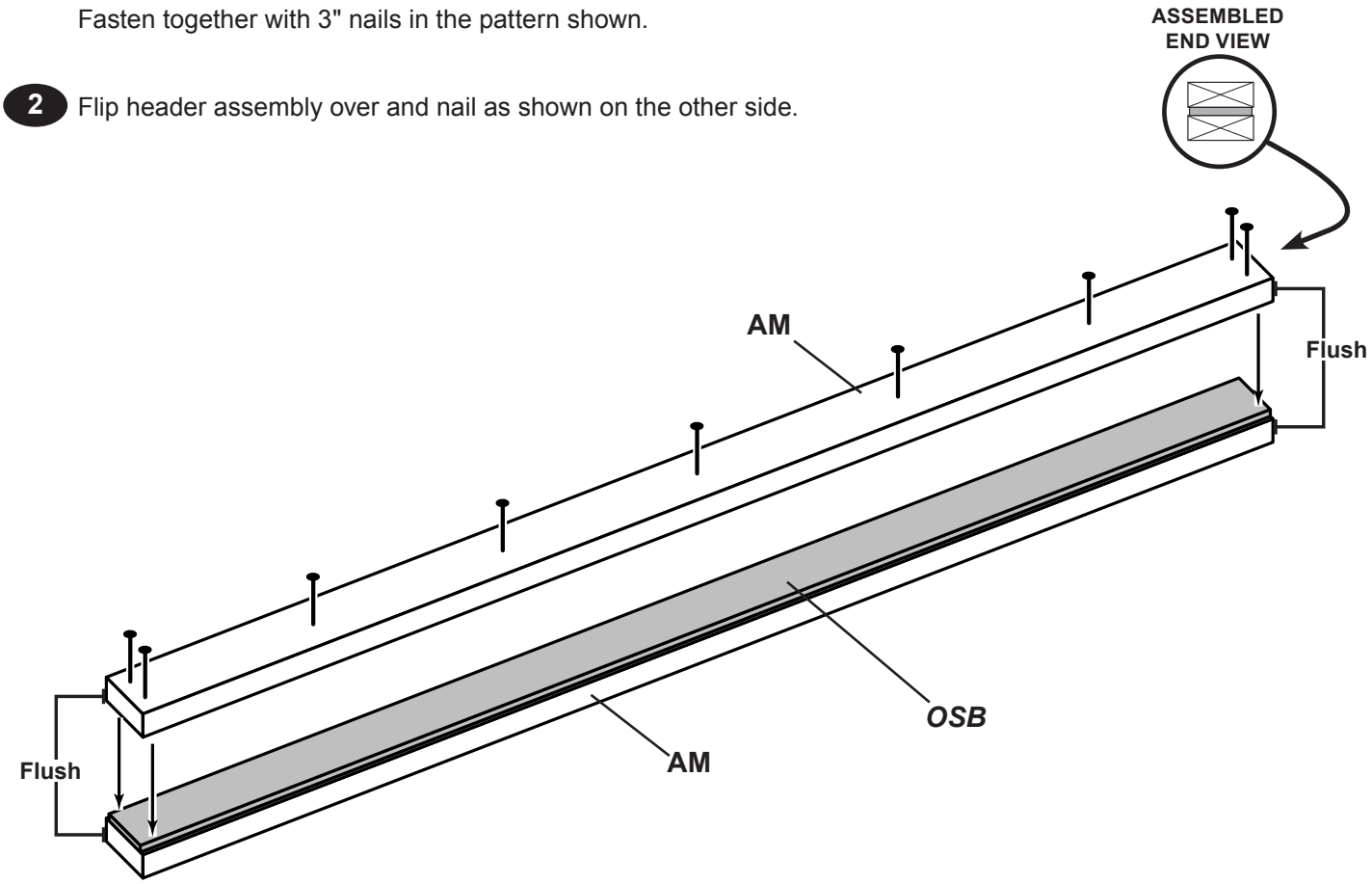

WALL PANEL INSTALLATION HINTS & EXAMPLES

PARTS REQUIRED:

x40 — 2" (5,1 cm)

x1 — 3/8 x 48 x 84" (1 x 121,9 x 213,4 cm)

GAA — 3/4" GAUGE BLOCK

2x4 TEMP. SPACER

Ensure your wall is square by installing one panel and squaring frame.

Install all wall panels with the primed side facing up.

BEGIN

1 Place (1) **48" x 84"** panel on the wall frame, as shown.
Locate the panel 1-1/2" above the top plate.
Use a 2x4 as a gauge block for the 1-1/2" top overhang measurement.
Use the **GAA** gauge block to mark the 3/4" side measurement on the wall stud.
Secure panel with (2) 2" nails in the corners **(Fig. A).**

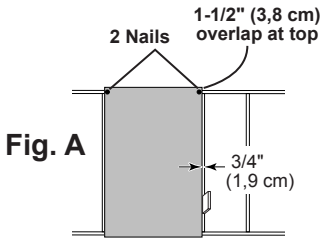

Fig. A

2 Move to the opposite end. Using the long edge of the panel as a lever, move the panel side-to-side until you have a 3/4" measurement on the wall stud.
Secure corner with (2) 2" nails **(Fig. B)**.
Secure panel with 2" nails spaced 6" apart on edges and 12" apart inside panel.

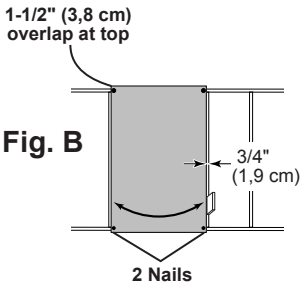

Fig. B

For squareness maintain 1-1/2" and 3/4" measurement along panel edges.

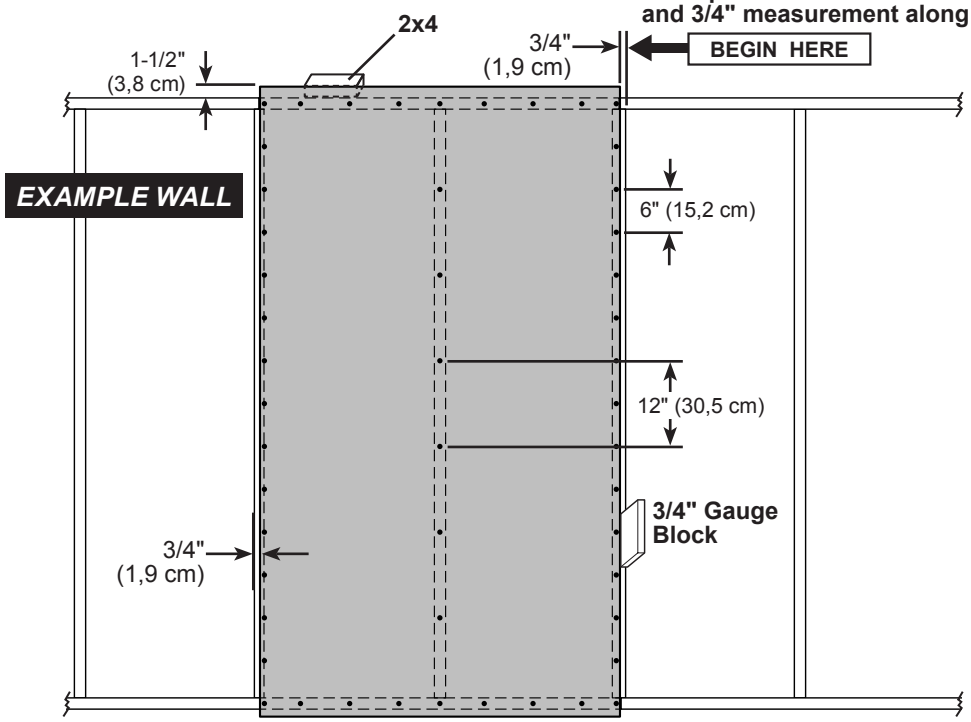

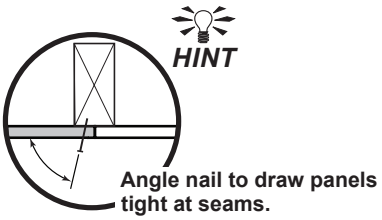

DOOR FRAME UNIT

PARTS REQUIRED:

x5 **AL**
2 x 4 x 7" (5,1 x 10,2 x 17,8 cm)

x2 **UM**
2 x 4 x 68" (5,1 x 10,2 x 172,7 cm)

x2 **AI**
2 x 4 x 78-1/2" (5,1 x 10,2 x 199,4 cm)

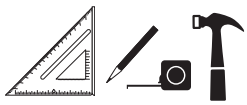

x28
3" (7,6 cm)

x6
3" (7,6 cm)

x1 **Assembled Header**

3 Arrange parts on edge on floor, as shown. Measure and mark from end of boards. Orient **Assembled Header** on flat side **(Fig. A)**. Secure with (2) 3" nails at each connection.

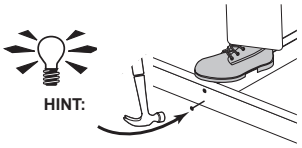

4 Fasten (3) middle parts **AL** to **Pre Assembled Header** with (2) 3" screws **(Fig. B)**. Secure (2) end parts **AL** to top plates with (2) 3" nails.

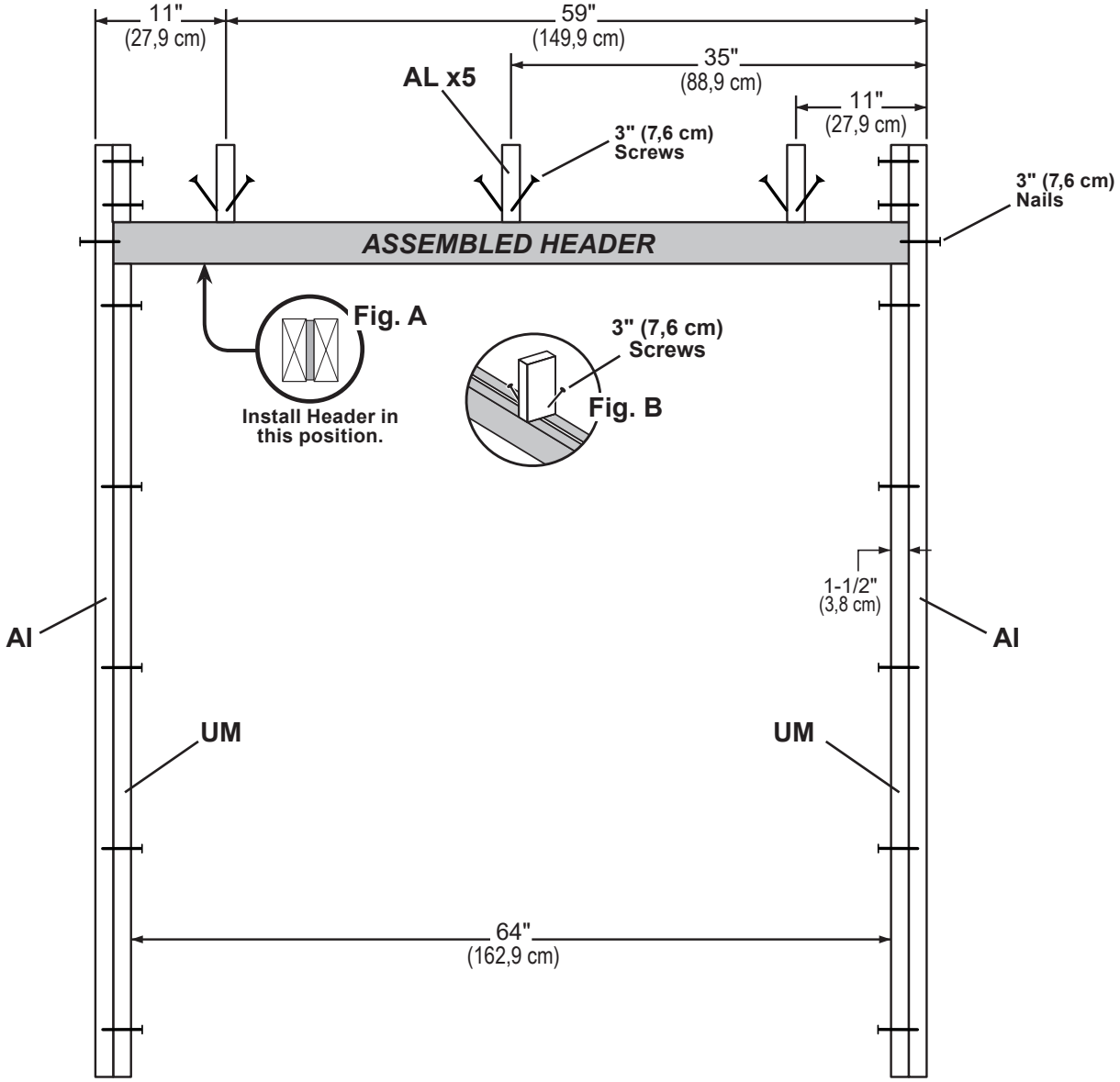

FINISH

Your door frame unit is now assembled.

10' WALL A

PARTS REQUIRED:

x40 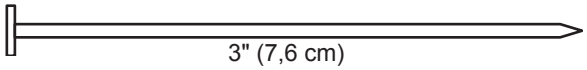

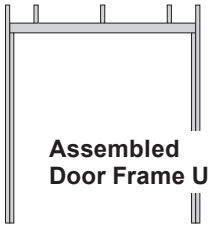

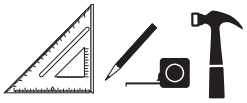

x2	QS	2 x 4 x 32-1/2" (5,1 x 10,2 x 82,5 cm)
x4	AI	2 x 4 x 78-1/2" (5,1 x 10,2 x 199,4 cm)
x2	CGA	2 x 4 x 80-1/2" (5,1 x 10,2 x 204,5 cm)

BEGIN
1

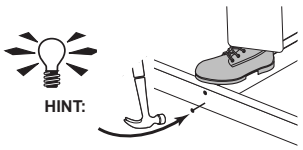

Arrange parts on edge on floor, as shown. Measure and mark from end of boards.
Place the **Door Frame Unit** at measurements shown.
Secure parts with (2) 3" nails at each connection and (4) 3" nails at seam.

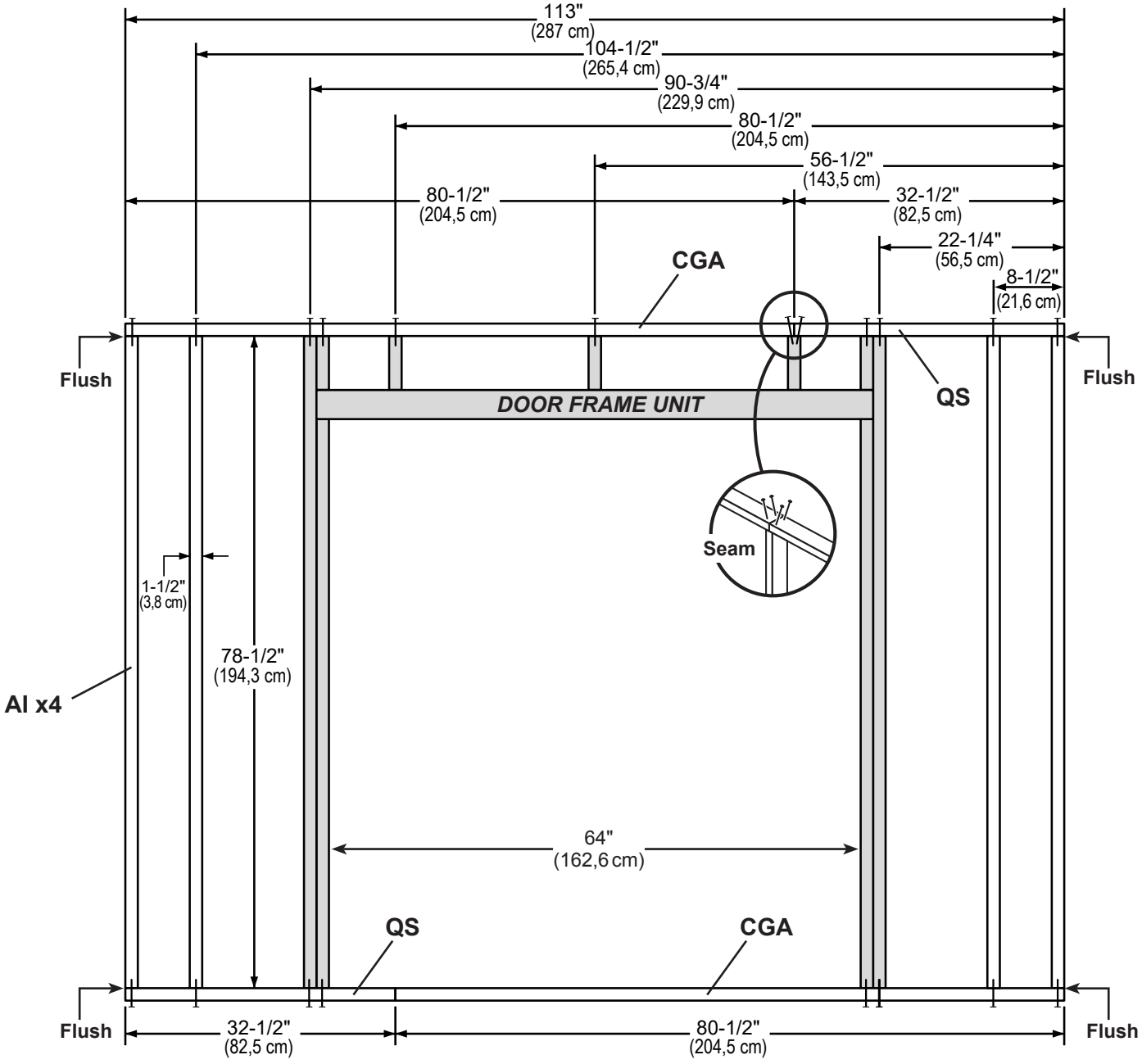

10' WALL A

PARTS REQUIRED:

x2 11-7/8" x 84" (30,2 x 213,4 cm)

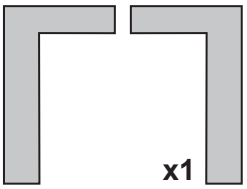

x1 **x1**

x2 3" (7,6 cm)

x158 2" (5,1 cm)

x1 **OO** ***Temporary Brace*** 69" (75,3 cm) Door Stiffener



2 Install the left panel 1-1/2" from the top plate.
Use a 2x4 spacer for consistent measurement.
Secure panel with 2" nails spaced 6" apart on edges.

3 Install the right panel flush to installed panel, as shown.
Ensure 64" (162,8 cm) door measurement.
Use part **OO** as a temporary brace. Secure with with (2) 3" screws.

Secure panels with 2" nails spaced 6" apart on edges.

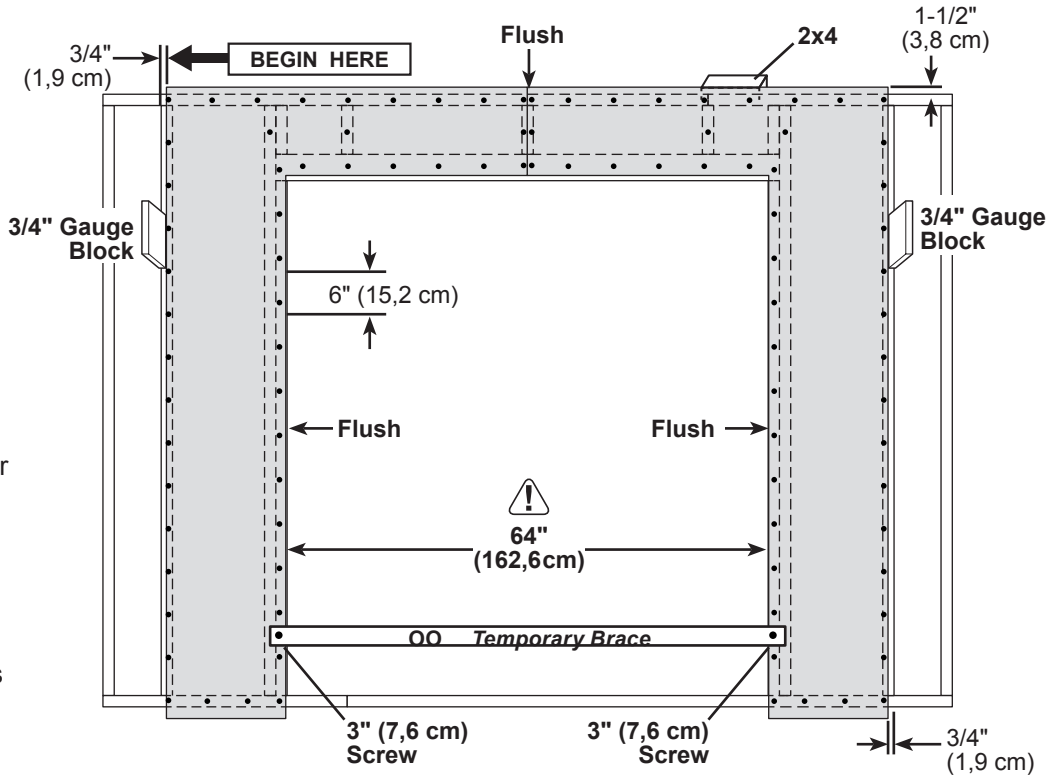

4 Install (2) **11-7/8" x 84"** panels flush to installed panels and 1-1/2" from the top plate.

Secure panels with 2" nails spaced 6" apart on edges.

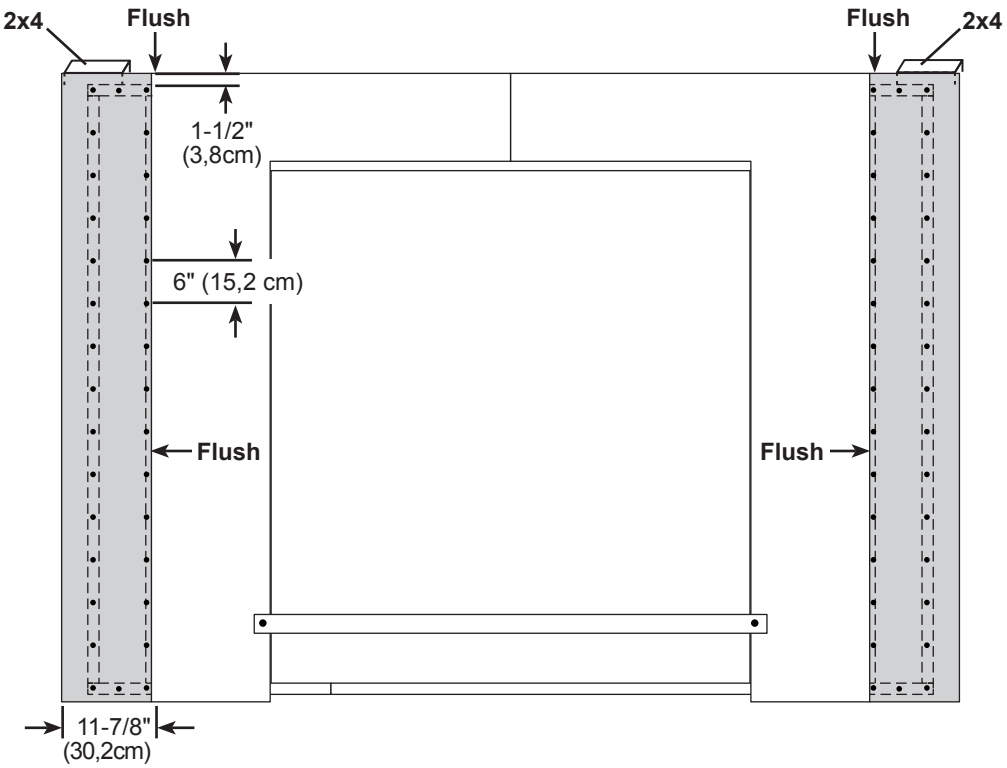

FINISH

Your 10' wall A is now assembled.
Carefully flip the wall over.

10' WALL B

PARTS REQUIRED:

x28 — 3" (7,6 cm)



x2 **RP** 2 x 4 x 20-1/2" (5,1 x 10,2 x 52,1 cm)

x6 **AI** 2 x 4 x 78-1/2" (5,1 x 10,2 x 199,4 cm)

x2 **TJ** 2 x 4 x 92-1/2" (5,1 x 10,2 x 235 cm)

✓**BEGIN**

1 Arrange parts on edge on floor. Measure and mark from end of boards. Secure with (2) 3" nails at each connection and (4) 3" nails at seams.

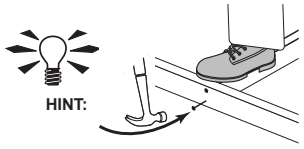

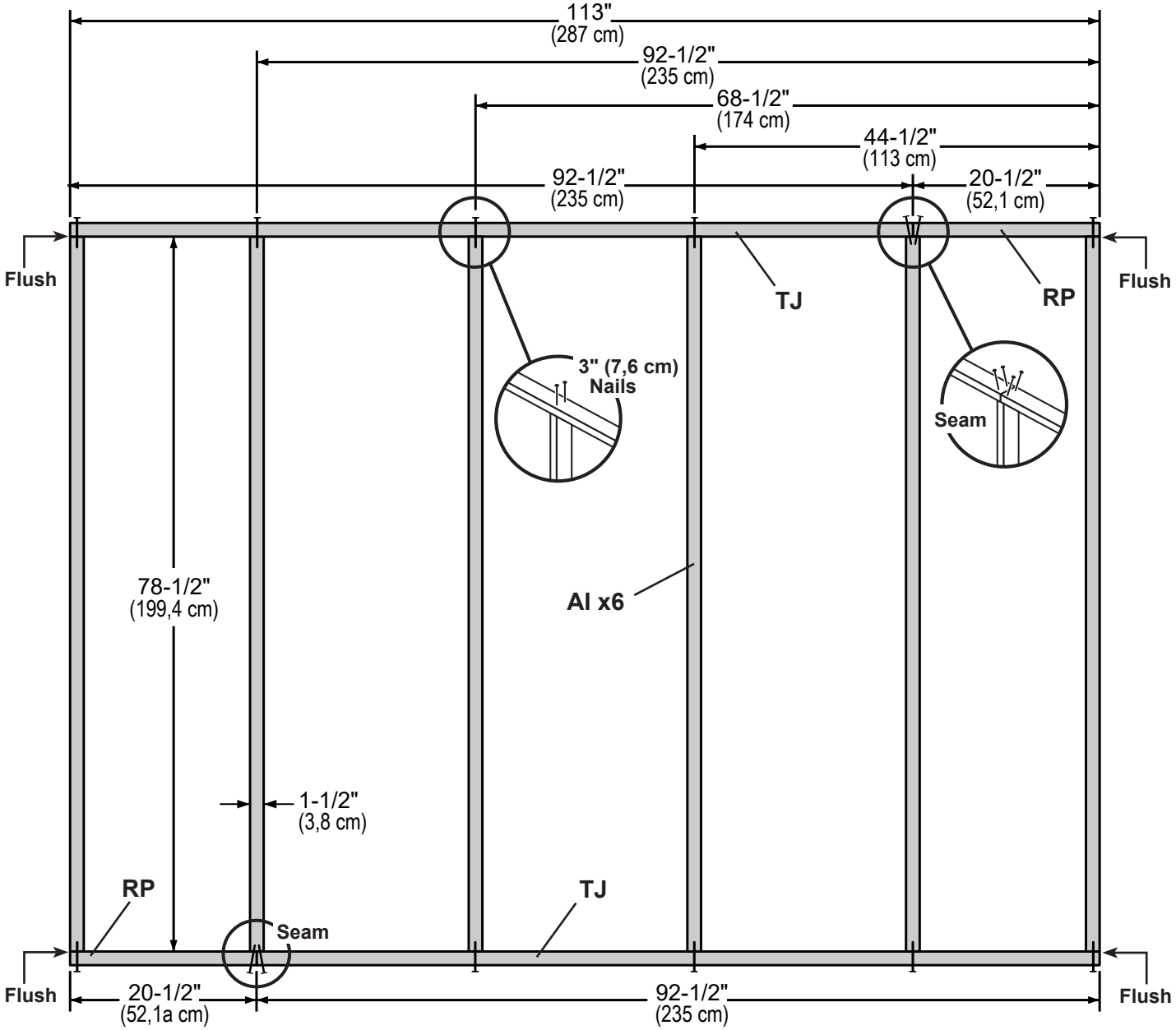

10' WALL B

PARTS REQUIRED:

x136 — 2" (5,1 cm)

x1 — 23-7/8" x 84" (60,6 x 213,4 cm)

x2 — 48 x 84" (121,9 x 213,4 cm)



2

Install **48" x 84"** panel 1-1/2" from the top plate.

Use a 2x4 spacer for consistent measurement.

Secure panel with 2" nails spaced 6" apart on edges and 12" inside panel.

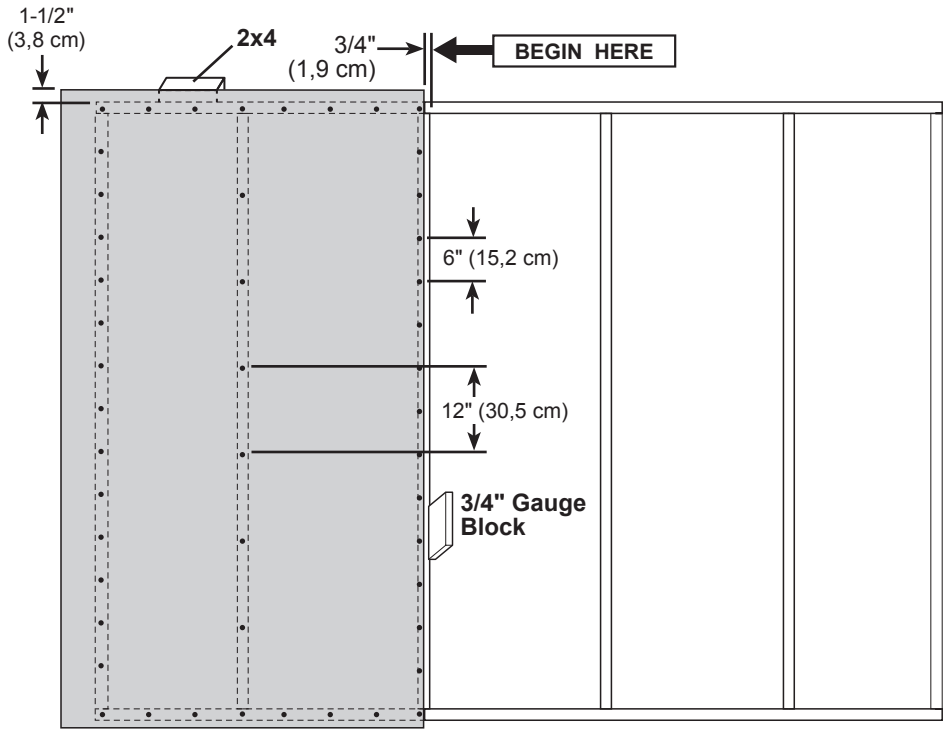

3

Install the **48" x 84"** and **23-7/8" x 84"** panels flush to installed panels.

Locate panels 1-1/2" from the top plate.

Secure with 2" nails spaced 6" apart on edges and 12" apart inside panel.

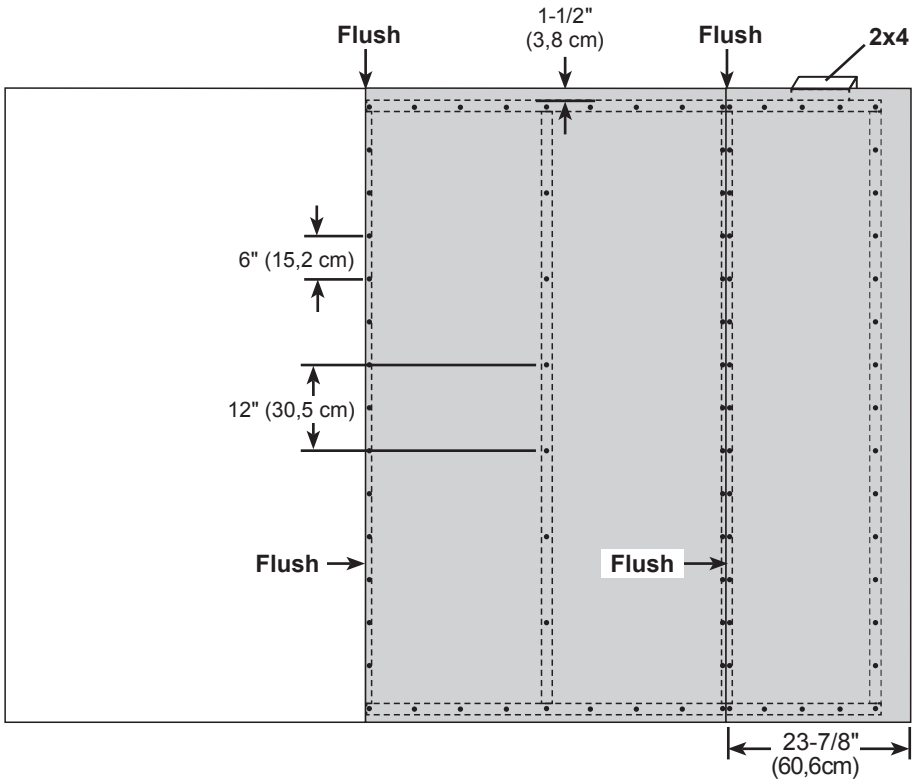

FINISH

Your 10' wall B is now assembled.

Carefully flip the wall over.

16' WALL C

PARTS REQUIRED:

x44 — 3" (7,6 cm)

x2 **TM** — 2 x 4 x 72" (5,1 x 10,2 x 182,9 cm)

x9 **AI** — 2 x 4 x 78-1/2" (5,1 x 10,2 x 199,4 cm)

x3 **SP** — 2 x 4 x 48" (5,1 x 10,2 x 121,9 cm)

x1 **TP** — 2 x 4 x 96" (5,1 x 10,2 x 243,8 cm)

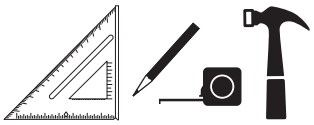

✓**BEGIN**

1 Arrange parts on edge on floor. Measure and mark from end of boards. Secure with (2) 3" nails at each connection and (4) 3" nails at seams.

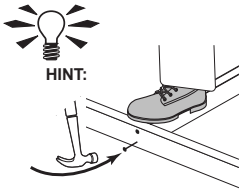

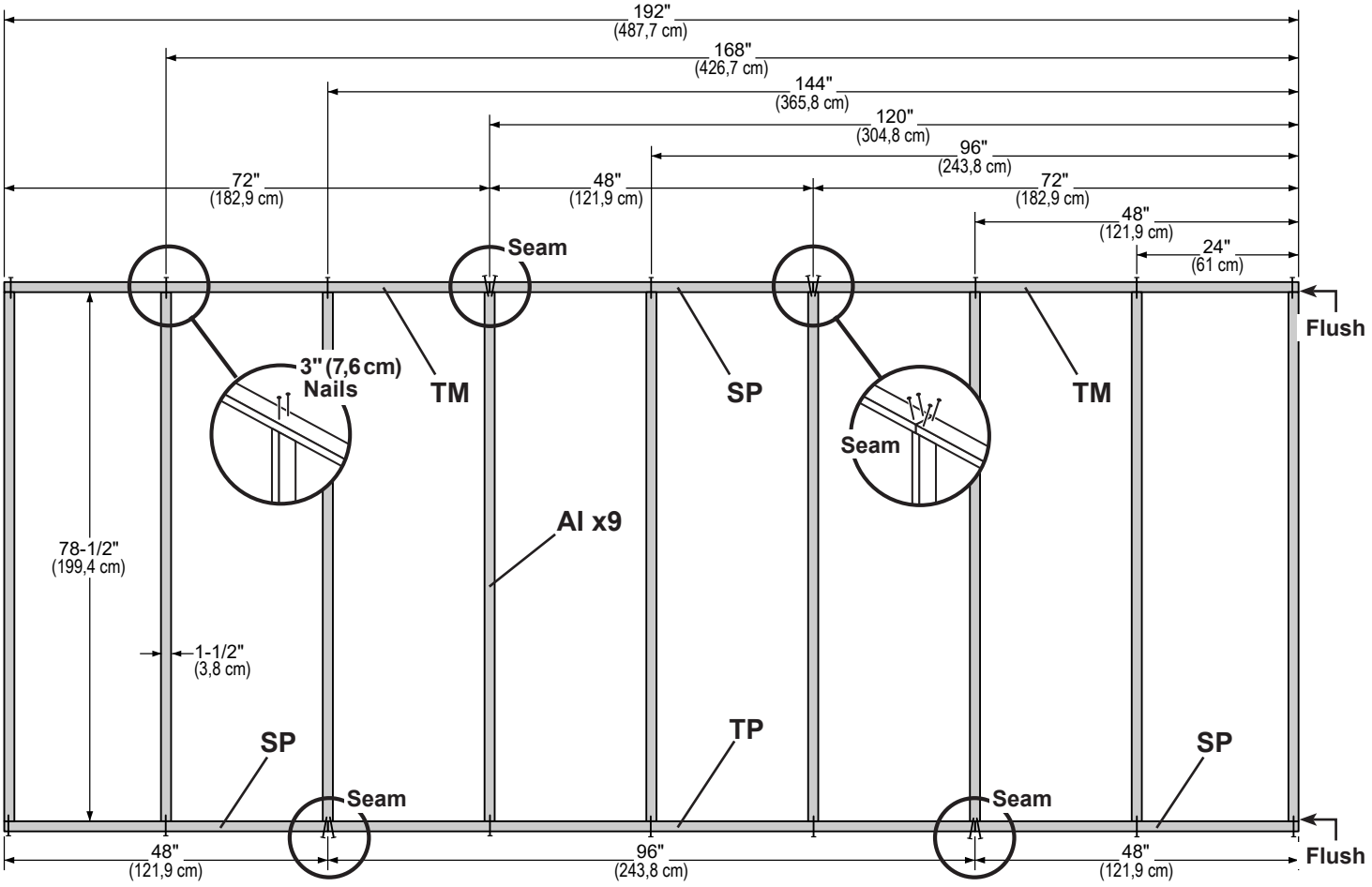

16' WALL C

PARTS REQUIRED:

x2 — 23-7/8" x 84" (60,6 x 213,4 cm)

x3 — 48 x 84" (121,9 x 213,4 cm)

x222 — 2" (5,1 cm)



2 Install the first **48" x 84"** panel 1-1/2" from the top plate. Install panel in middle of wall.
Use a 2x4 spacer for consistent measurement.
Secure panel with 2" nails spaced 6" apart on edges and 12" inside panel.

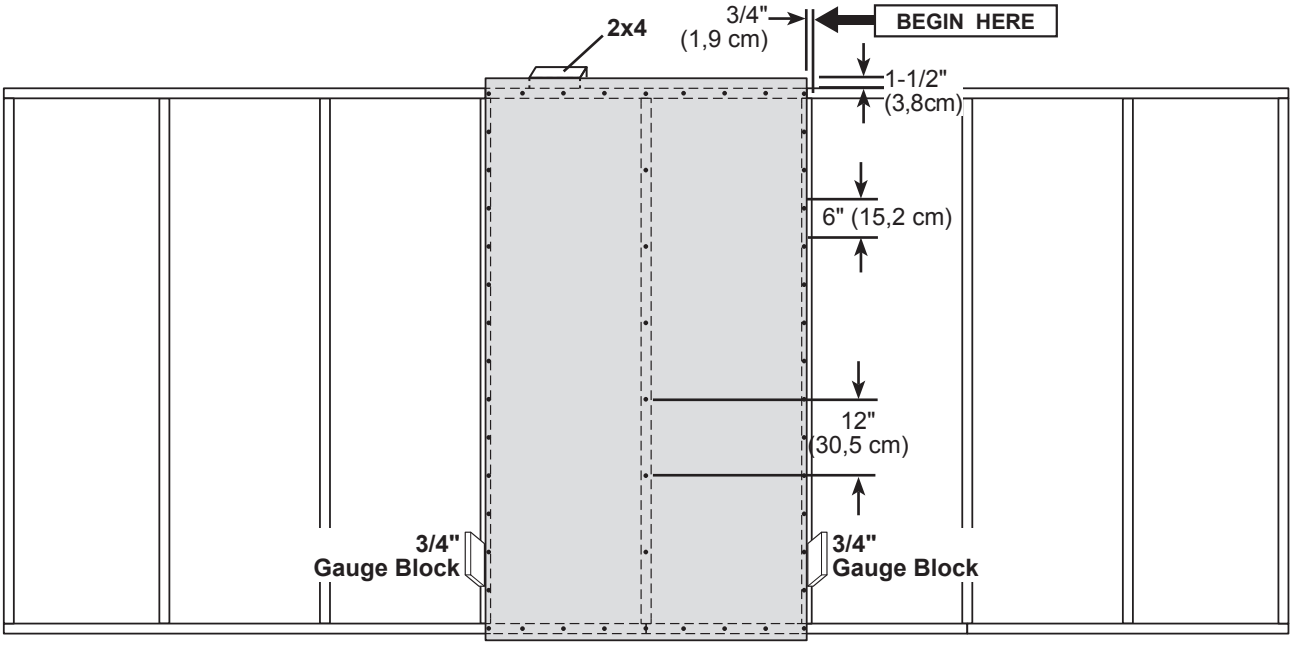

3 Install (1) **48" x 84"** panel and (2) **23-7/8 x 84"** panels flush to installed panels.
(Install **48" x 84"** panels first.) Locate panels 1-1/2" from the top plate.
Secure panels with 2" nails spaced 6" apart on edges and 12" apart inside panel.

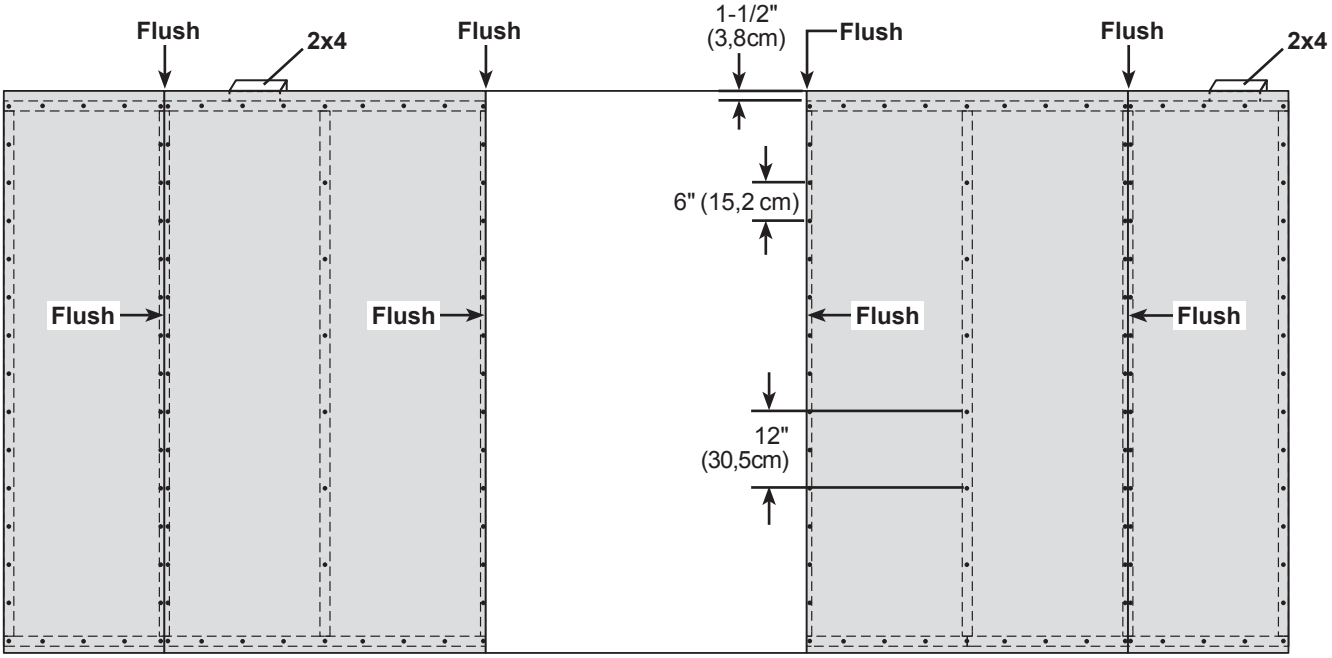

FINISH Your 16' wall C is now assembled.
Carefully flip the wall over.

16' WALL D

PARTS REQUIRED:

x44 3" (7,6 cm)

x2 TM
2 x 4 x 72" (5,1 x 10,2 x 182,9 cm)

x9 AI
2 x 4 x 78-1/2" (5,1 x 10,2 x 199,4 cm)

x3 SP
2 x 4 x 48" (5,1 x 10,2 x 121,9 cm)

x1 TP
2 x 4 x 96" (5,1 x 10,2 x 243,8 cm)

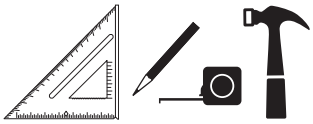

✓ **BEGIN**

1 Arrange parts on edge on floor. Measure and mark from end of boards. Secure with (2) 3" nails at each connection and (4) 3" nails at seams.

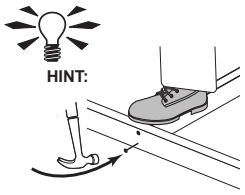

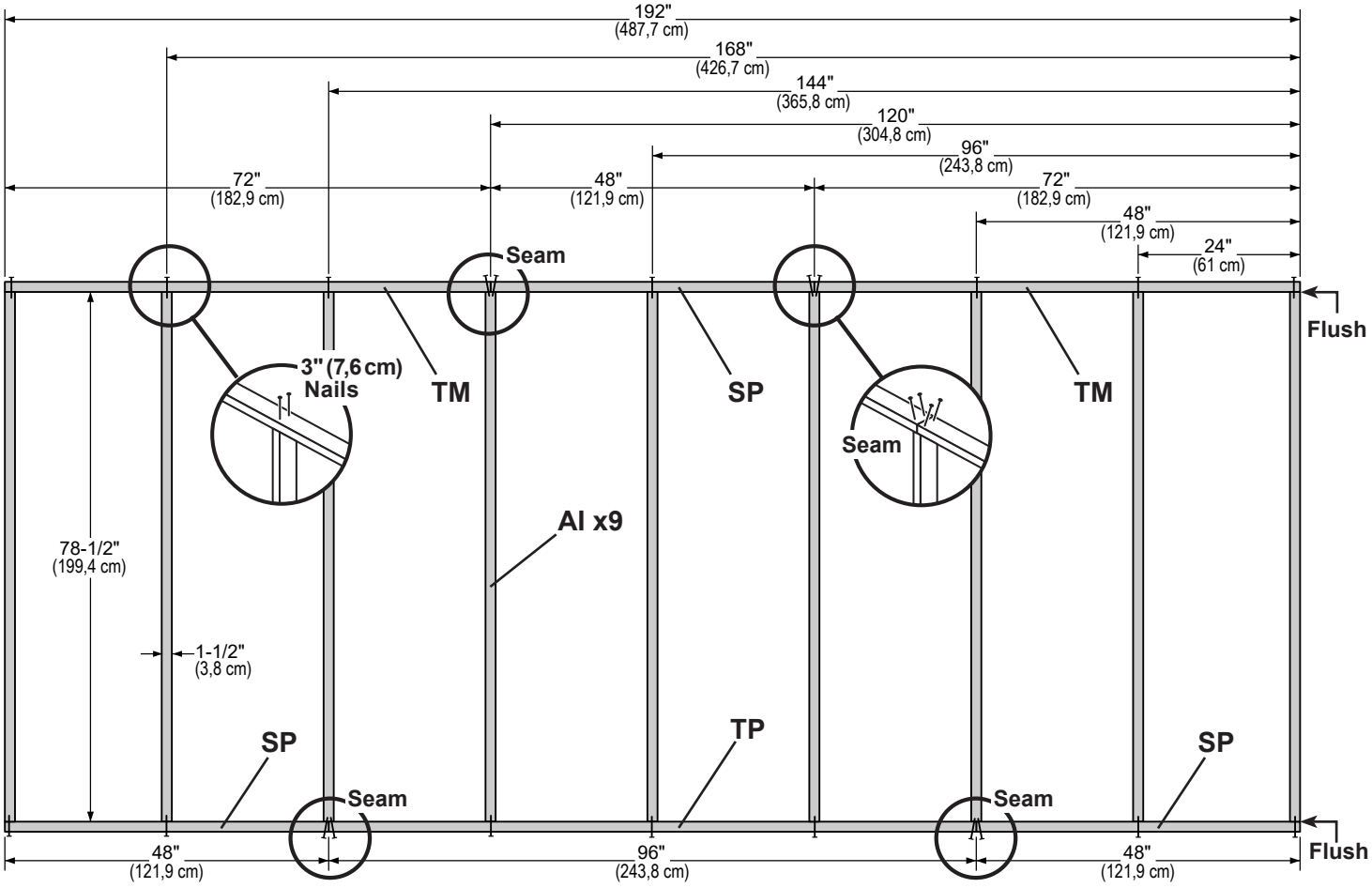

16' WALL D

PARTS REQUIRED:

x4



48 x 84"
(121,9 x 213,4 cm)

x200

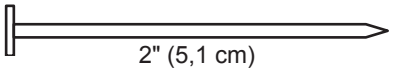

2" (5,1 cm)



2 Install 1st **48" x 84"** panel 1-1/2" from the top plate. Install panel near middle of wall.
Use a 2x4 spacer for consistent measurement.
Secure panel with 2" nails spaced 6" apart on edges and 12" inside panel.

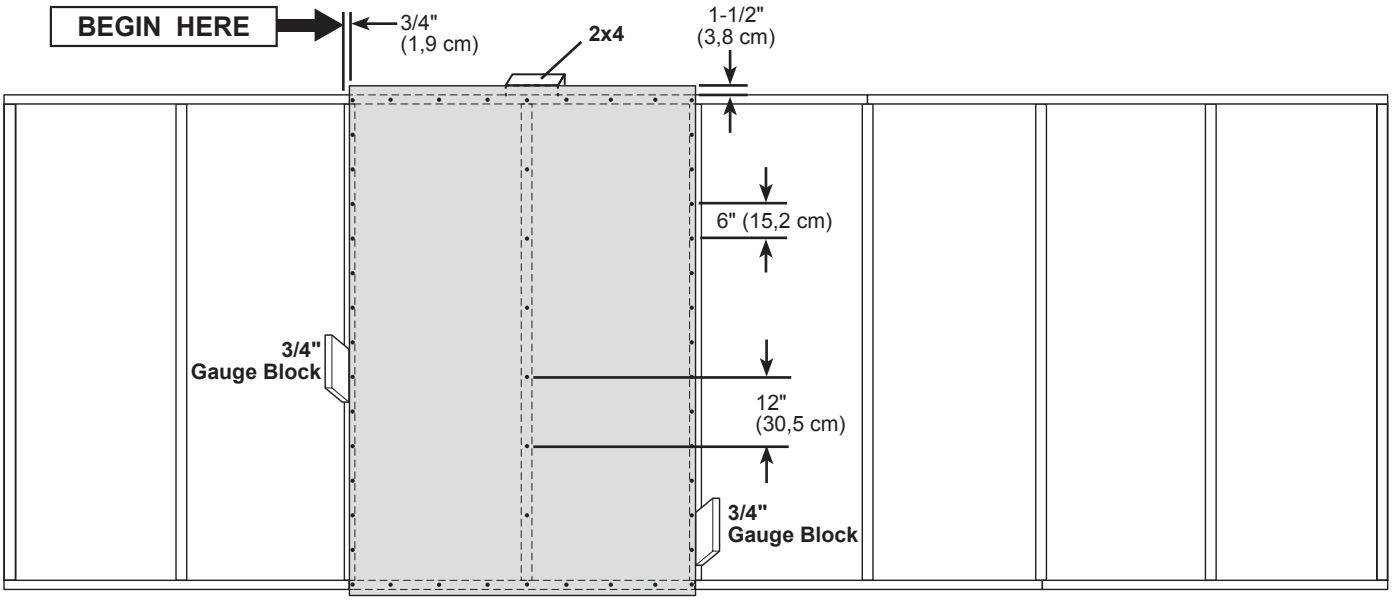

3 Install (3) **48" x 84"** panels flush to each installed panel. Locate panels 1-1/2" from the top plate.
Secure with 2" nails spaced 6" apart on edges and 12" apart inside panel.

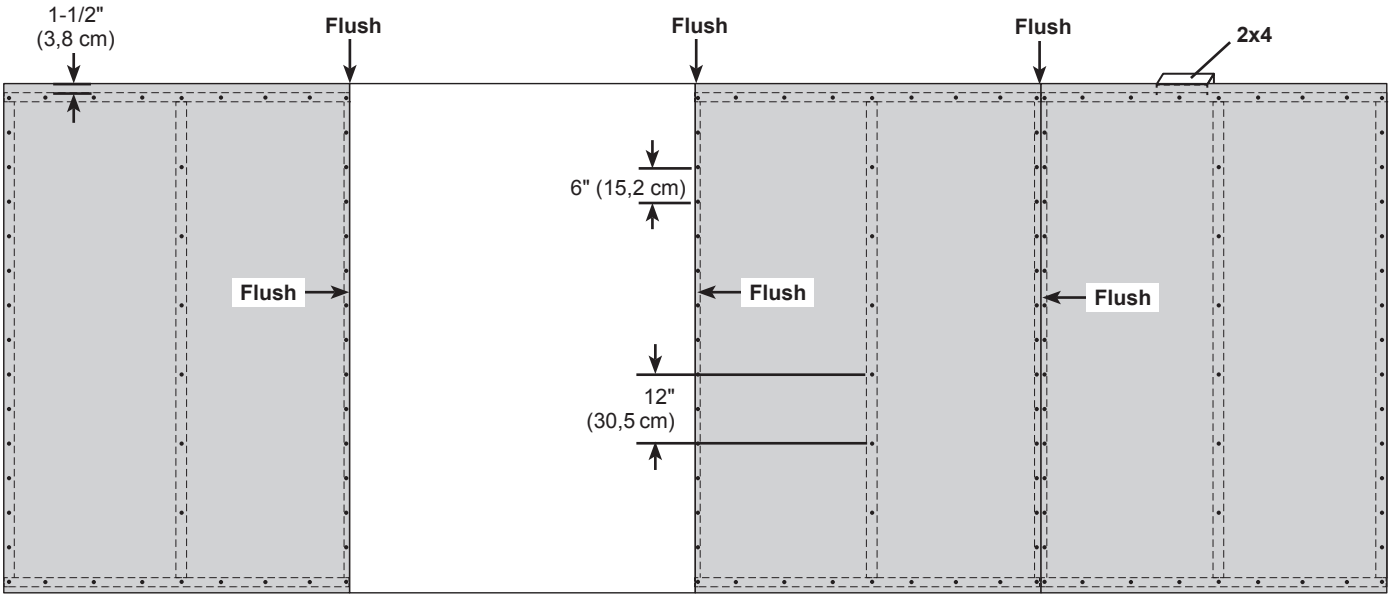

FINISH

Your 16' WALL D is now assembled.
Carefully flip the wall over.

10' WALL E

PARTS REQUIRED:

x2 **QS**
2 x 4 x 32-1/2" (5,1 x 10,2 x 82,5 cm)

x7 **AI**
2 x 4 x 78-1/2" (5,1 x 10,2 x 199,4 cm)

x2 **CGA**
2 x 4 x 80-1/2" (5,1 x 10,2 x 204,5 cm)

x32

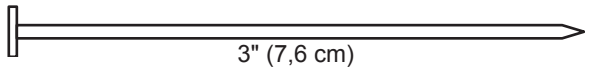

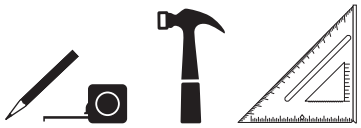

BEGIN

1 Arrange parts on edge on floor. Measure and mark from end of boards.

Secure with (2) 3" nails at each connection and (4) 3" nails at seams.

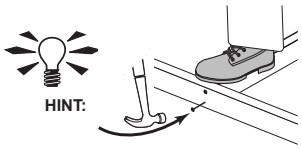

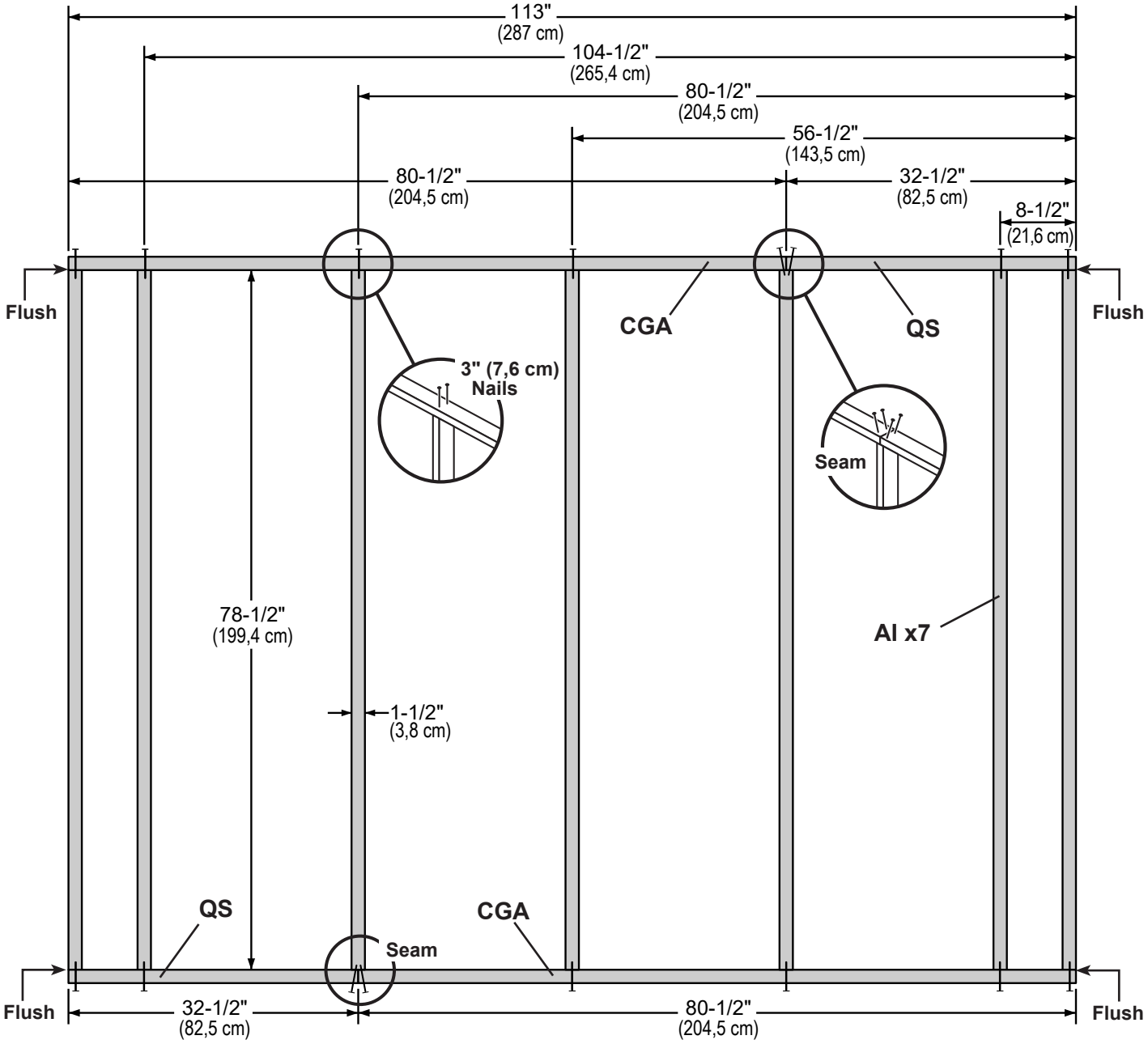

10' WALL E

PARTS REQUIRED:

x2 11-7/8" x 84" (30,2 x 213,4 cm)

x2 48 x 84" (121,9 x 213,4 cm)

x164 2" (5,1 cm)

2

Install **48" x 84"** panel 1-1/2" from the top plate.

Use a 2x4 spacer for consistent measurement.

Secure panel with 2" nails spaced 6" apart on edges and 12" inside panel.

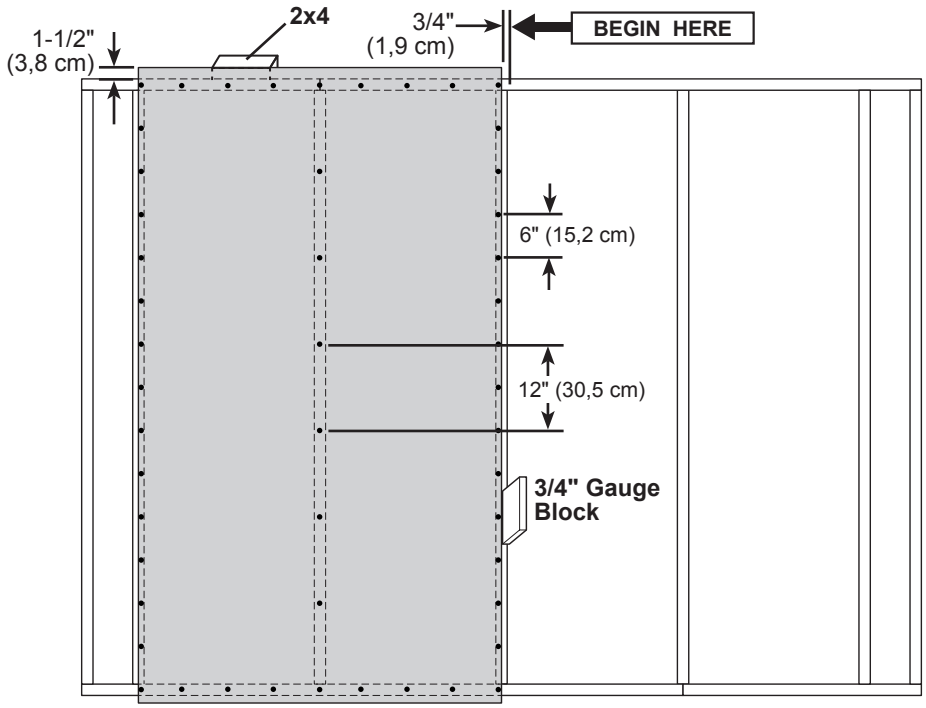

3

Install the **48" x 84"** and (2) **11-7/8" x 84"** panels flush to installed panels.

Locate panels 1-1/2" from the top plate.

Secure with 2" nails spaced 6" apart on edges and 12" apart inside panel.

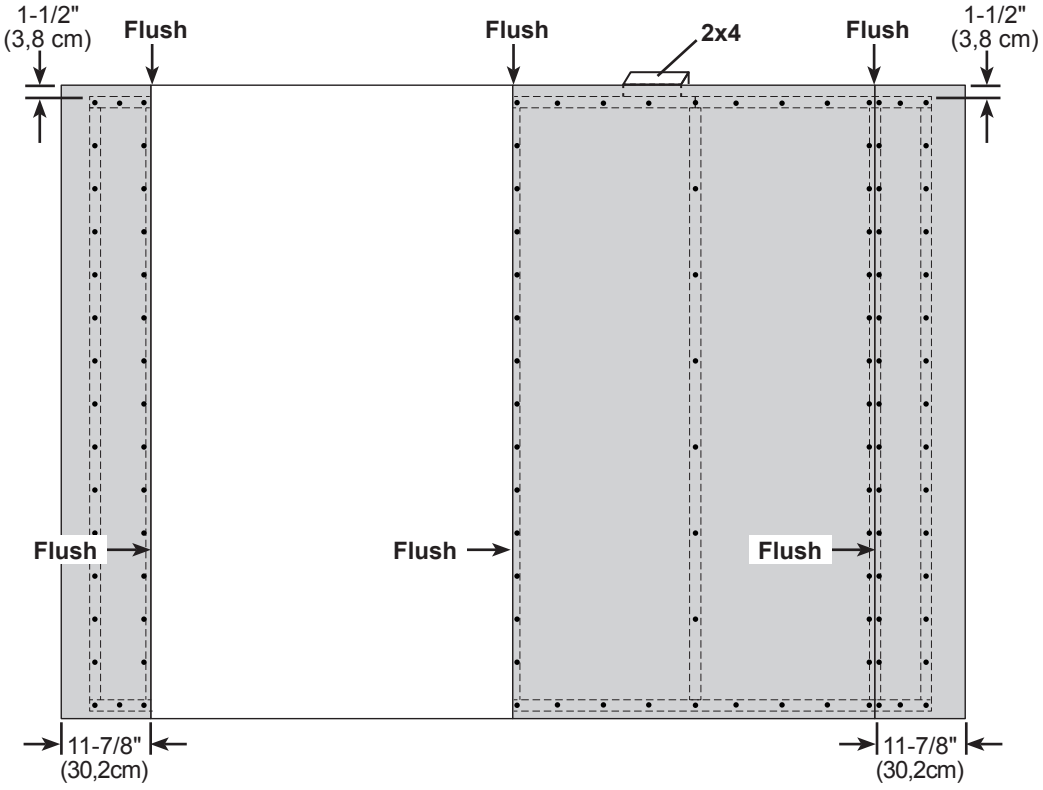

FINISH

Your 10' wall E is now assembled.

Carefully flip the wall over.

EAVE WALL F

PARTS REQUIRED:



Assembled
Door Frame Unit

x3 **SP**
2 x 4 x 48" (5,1 x 10,2 x 121,9 cm)

x2 **TM**
2 x 4 x 72" (5,1 x 10,2 x 182,9 cm)

x6 **AI**
2 x 4 x 78-1/2" (5,1 x 10,2 x 199,4 cm)

x1 **TP**
2 x 4 x 96" (5,1 x 10,2 x 243,8 cm)

x54 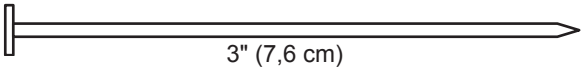
3" (7,6 cm)



✓**BEGIN**

1 Arrange parts on edge on floor, as shown. Measure and mark from end of boards. Place the **Door Frame Unit** at measurements shown.
Secure parts with (2) 3" nails at each connection and (4) 3" nails at seam.

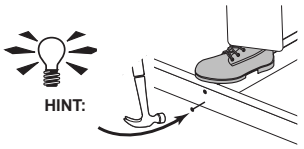

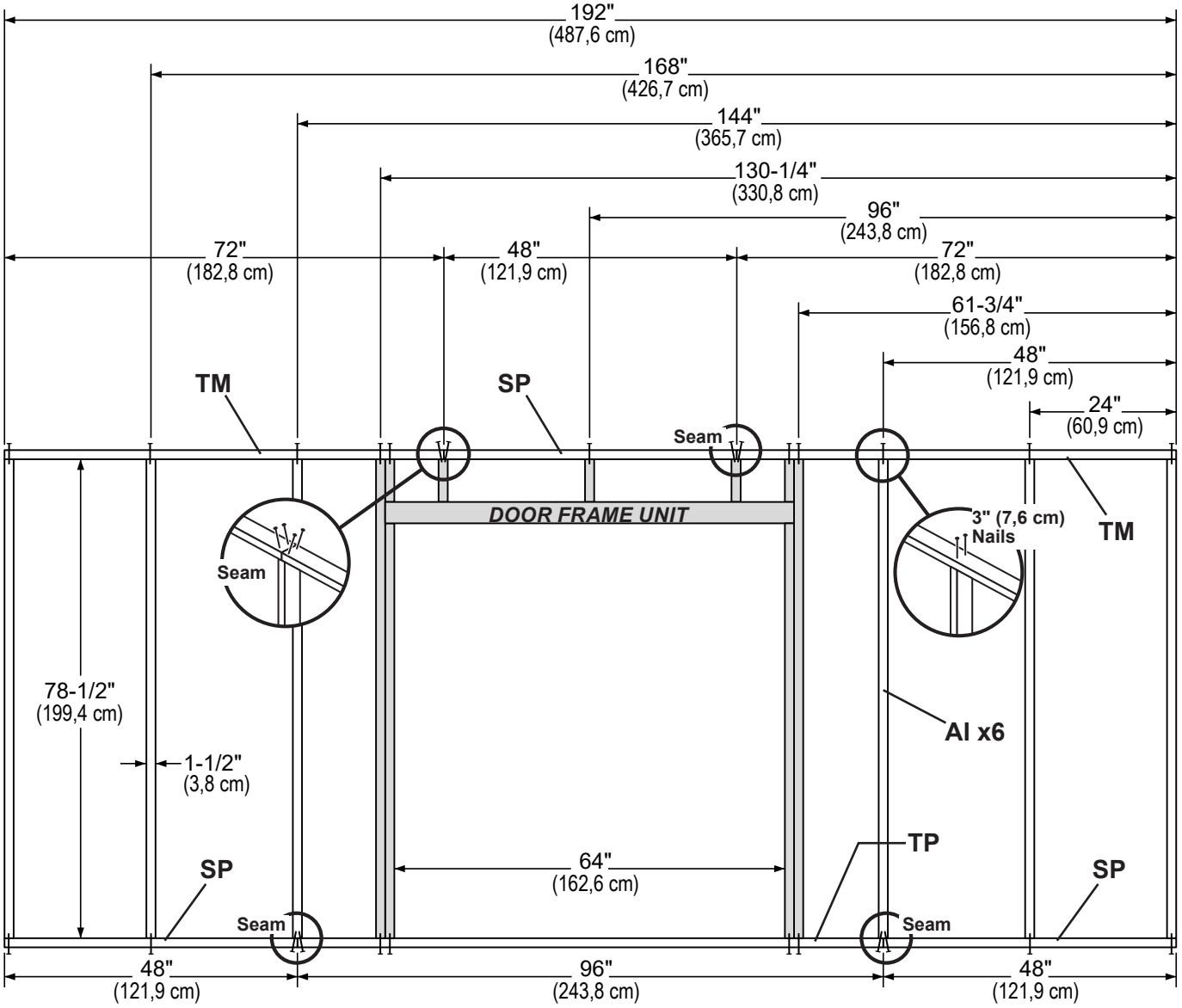

EAVE WALL F

PARTS REQUIRED:

x2



48" x 84"
(121,9 x 213,4 cm)

x1 x1

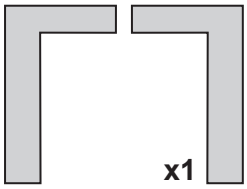

x194

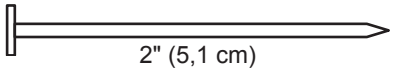

2" (5,1 cm)



2

Install the left panel 1-1/2" from the top plate.
Use a 2x4 spacer for consistent measurement.

Secure panel with 2" nails spaced 6" apart on edges.

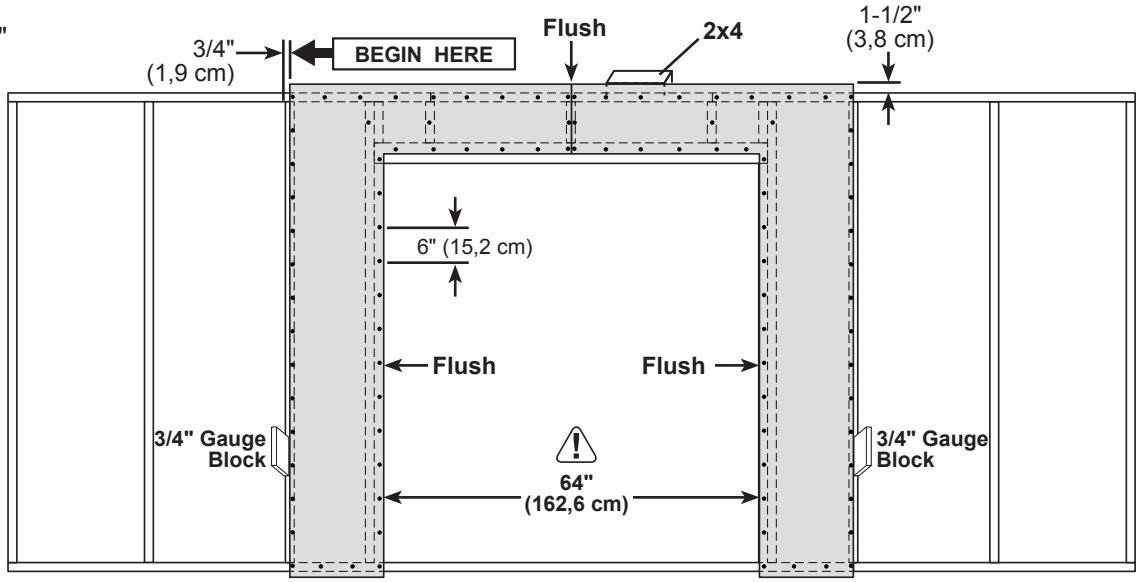

3

Install the right panel flush to installed panel, as shown.
Ensure the 64" door measurement.

Secure panel with 2" nails spaced 6" apart on edges.

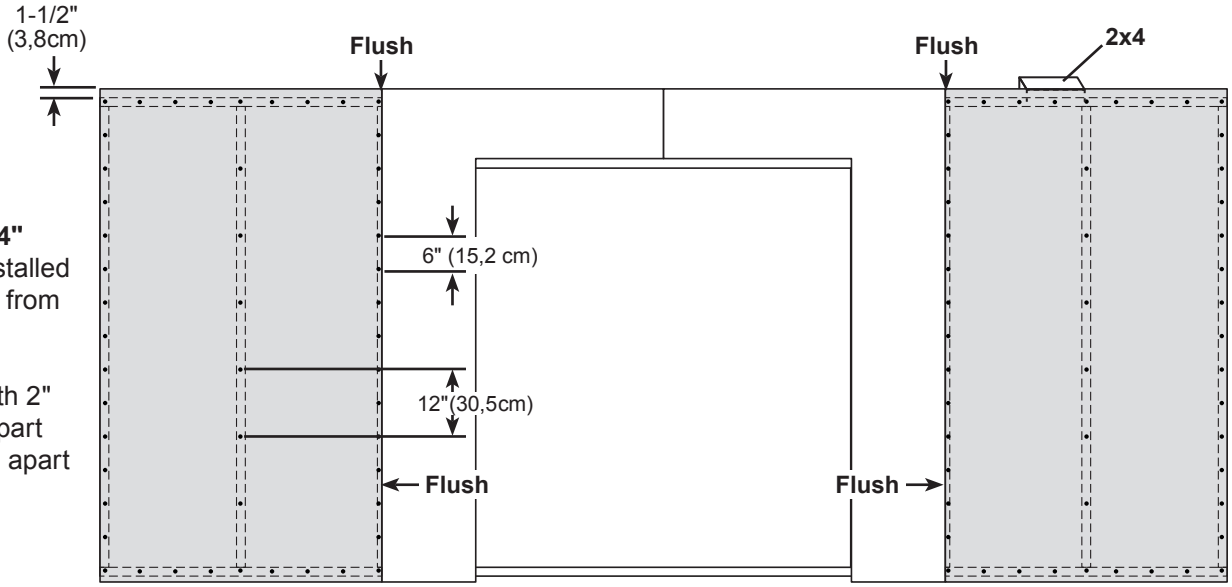

4

Install (2) **48" x 84"** panels flush to installed panels and 1-1/2" from the top plate.

Secure panels with 2" nails spaced 6" apart on edges and 12" apart inside panel.

FINISH

Your eave wall F is now assembled.
Carefully flip the wall over.

EAVE WALL G

PARTS REQUIRED:



Assembled
Door Frame Unit

x3 **SP**
2 x 4 x 48" (5,1 x 10,2 x 121,9 cm)

x2 **TM**
2 x 4 x 72" (5,1 x 10,2 x 182,9 cm)

x6 **AI**
2 x 4 x 78-1/2" (5,1 x 10,2 x 199,4 cm)

x1 **TP**
2 x 4 x 96" (5,1 x 10,2 x 243,8 cm)

x54
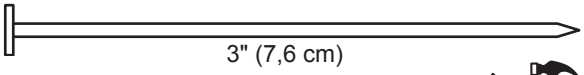
3" (7,6 cm)



✓BEGIN
1

Arrange parts on edge on floor, as shown. Measure and mark from end of boards.
Place the **Door Frame Unit** at measurements shown.
Secure parts with (2) 3" nails at each connection and (4) 3" nails at seam.

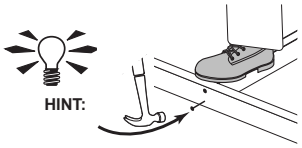

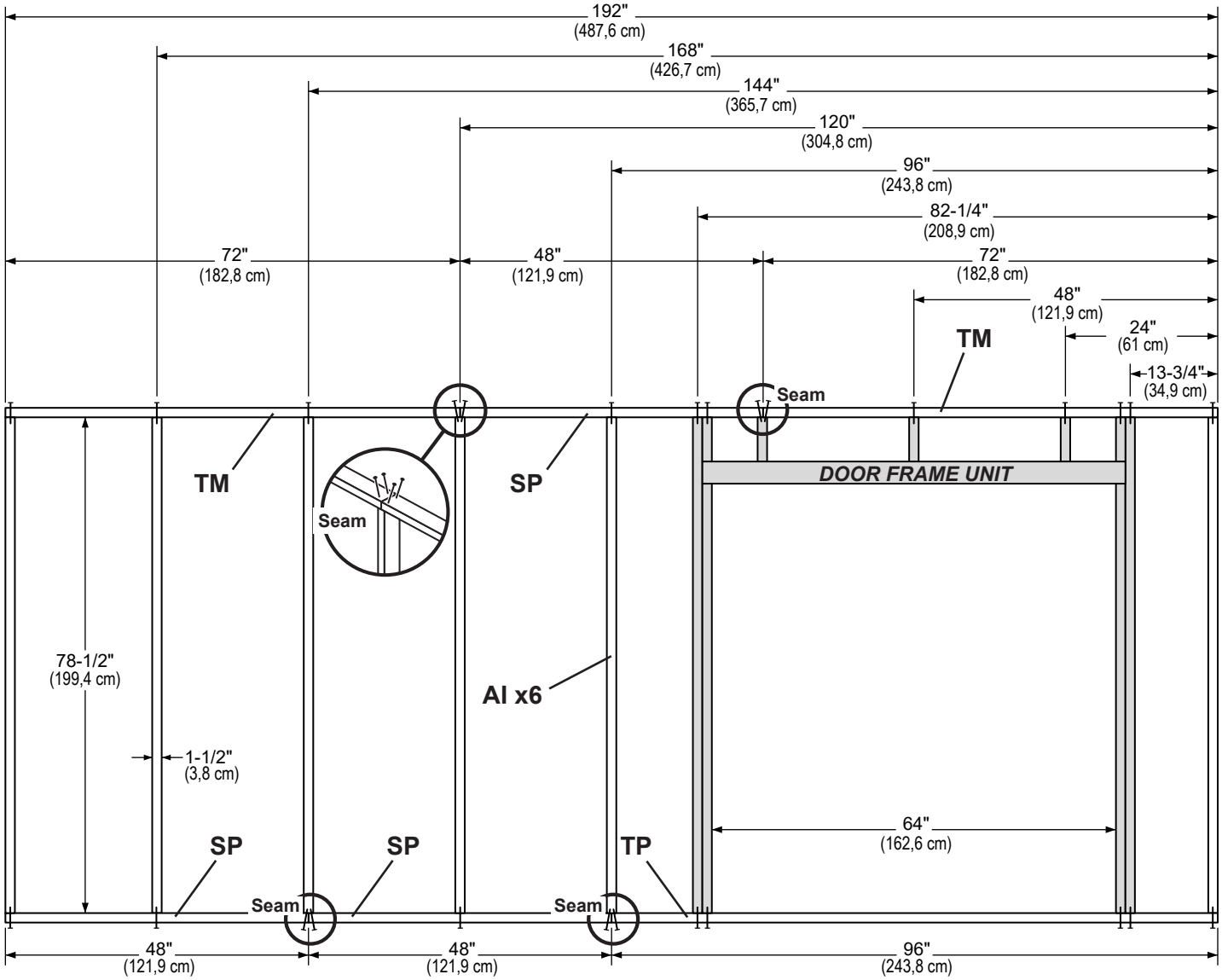

EAVE WALL G

PARTS REQUIRED:



2

Install the left panel 1-1/2" from the top plate.
Use a 2x4 spacer for consistent measurement.

Secure panel with 2" nails spaced 6" apart on edges.

3

Install the right panel flush to installed panel, as shown.
Ensure the 64" door measurement.

Secure panel with 2" nails spaced 6" apart on edges.

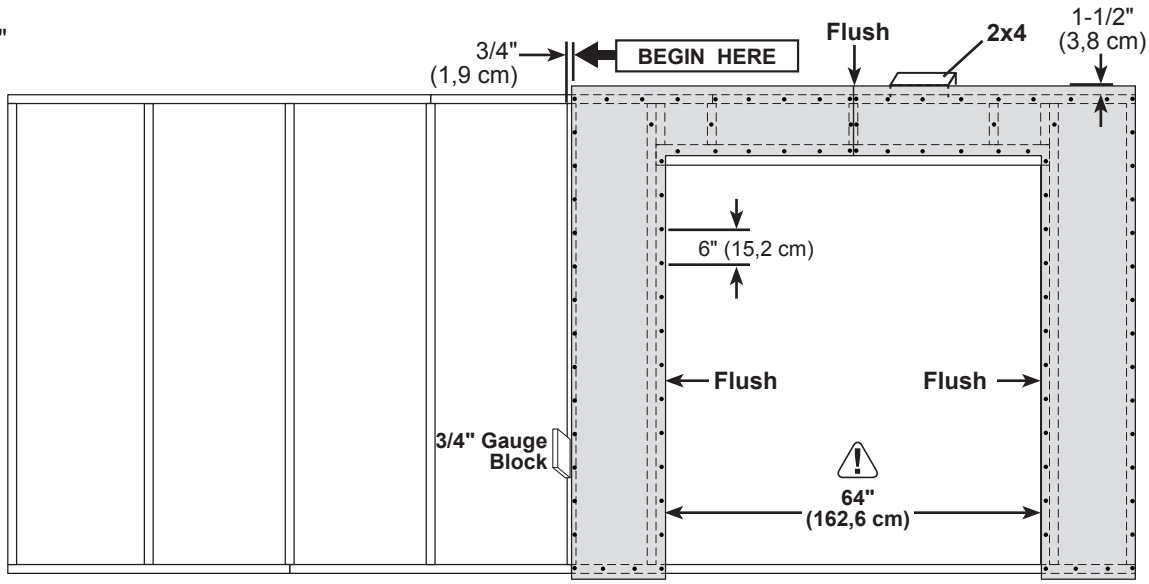

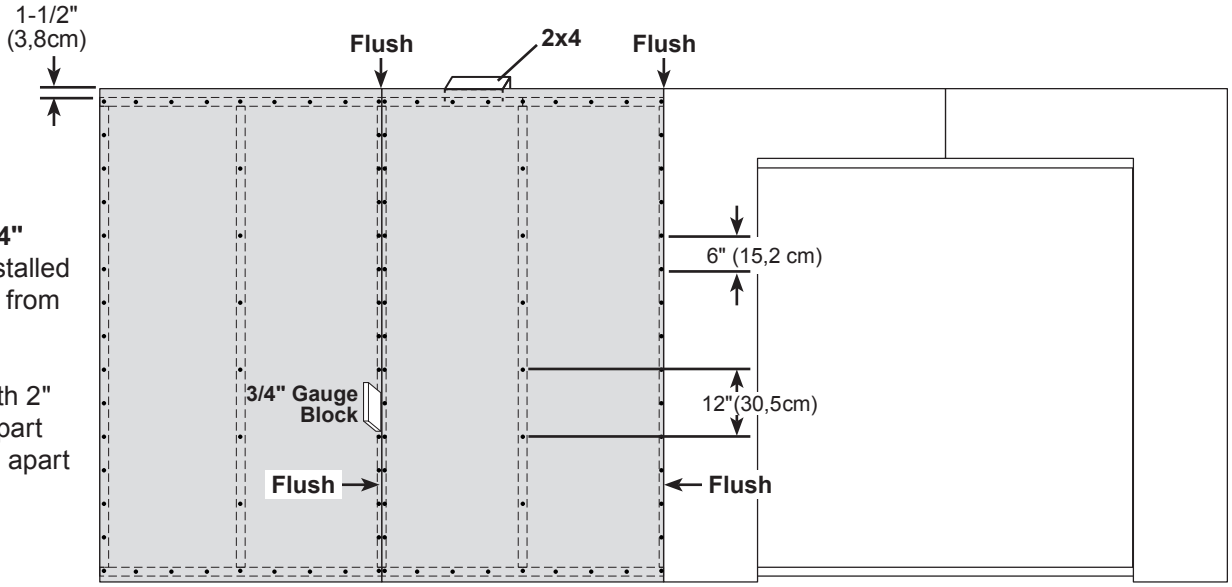

4

Install (2) **48" x 84"** panels flush to installed panels and 1-1/2" from the top plate.

Secure panels with 2" nails spaced 6" apart on edges and 12" apart inside panel.

FINISH

Your eave wall G is now assembled.
Carefully flip the wall over.

16' WALL D, F or G INSTALLATION

PARTS REQUIRED:

x1 **TJ** ***Temporary Brace***
2 x 4 x 92-5/8" (5,1 x 10,2 x 235 cm)

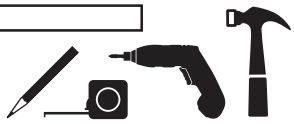

x16 — 3" (7,6 cm)

x2 — 3" (7,6 cm)

x36 — 2" (5,1 cm)

BEGIN

1

Center 16' wall on the 192" floor dimension.
1-1/2" overlap is to the top.
Use **TJ** as a temporary brace.
Secure with (2) 3" screws.

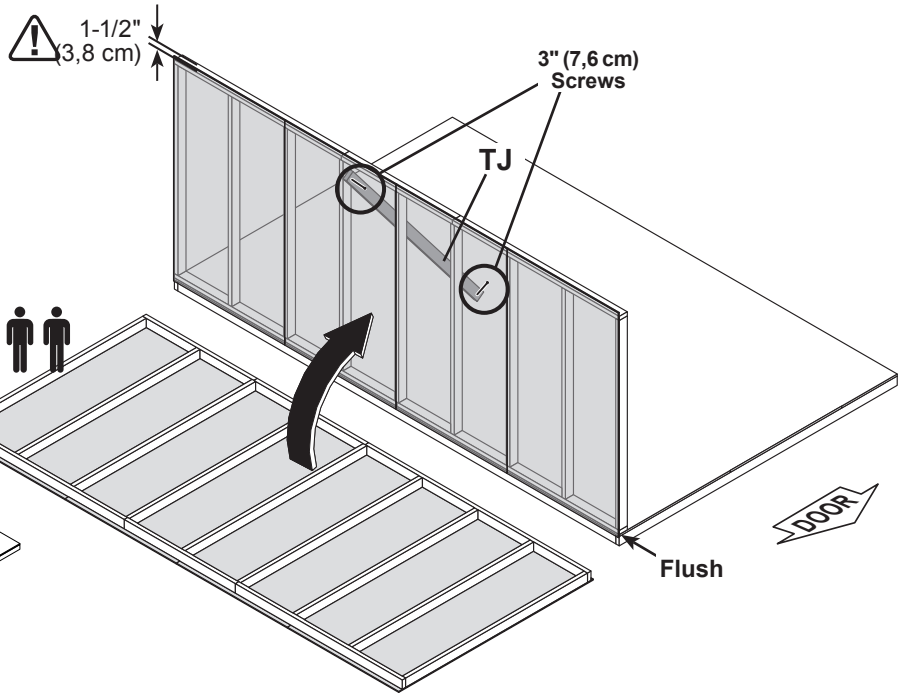

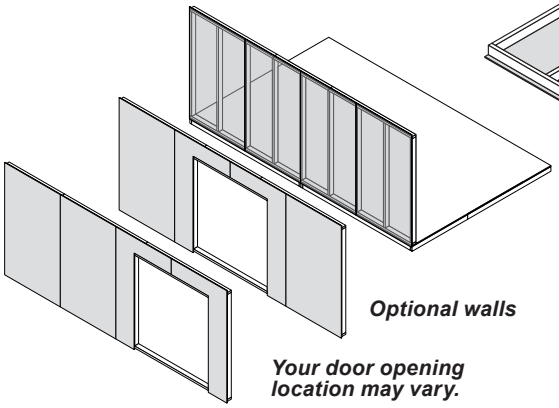

Optional walls

Your door opening location may vary.

2

Secure lower edge of panel to floor frame with 2" nails spaced 6" apart. Angle nails into floor frame **(Fig. A)**.

Secure wall bottom plates to floor with 3" nails **(Fig. A)**.

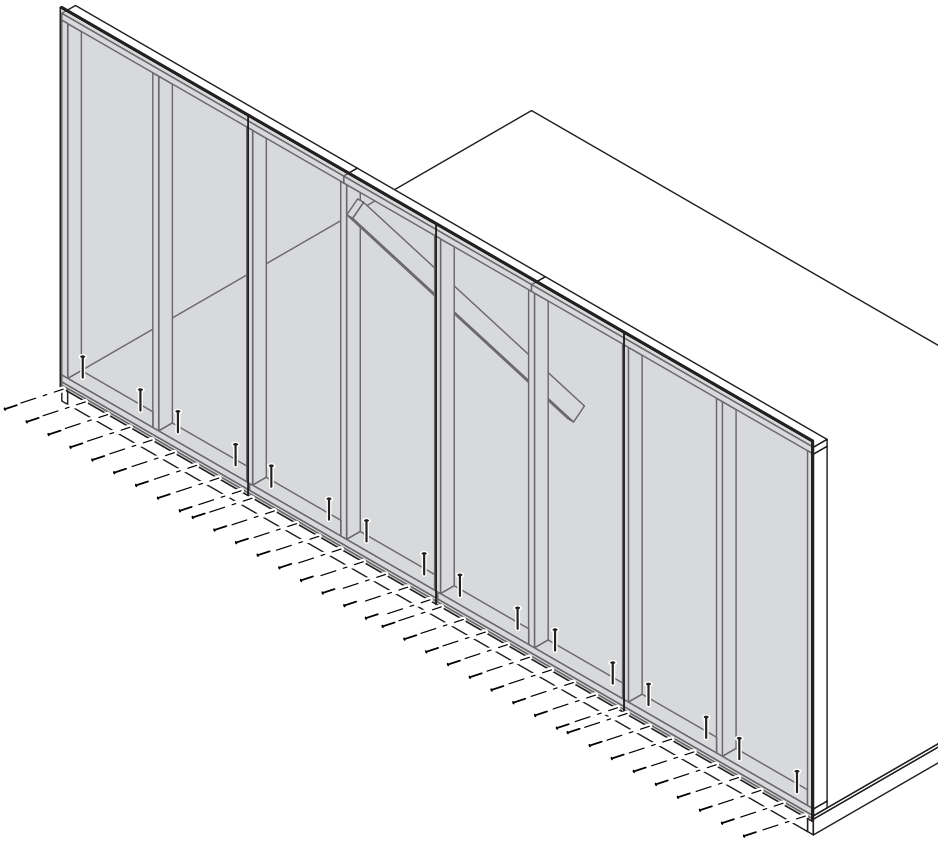

FINISH

Your 16' wall D, F or G is now standing.

10' WALL B or E INSTALLATION

PARTS REQUIRED

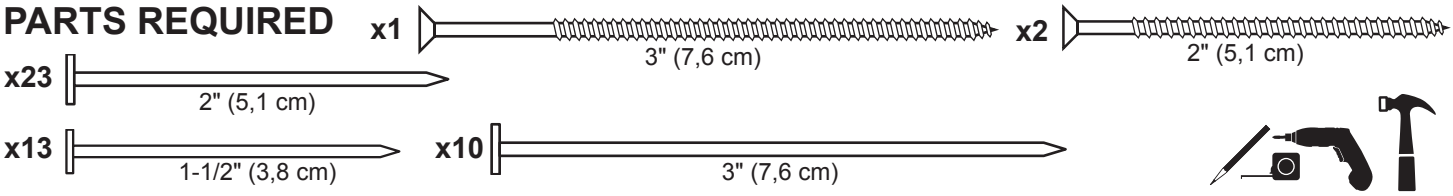

BEGIN

1

Install 10' wall centered on floor.
1-1/2" (3,8 cm) overlap is to the top.

Secure wall with (1) 2" screw into 16' wall bottom plate **(Fig. A)** and top plate **(Fig. B)**.

Secure wall to bottom plate first.

⚠ **ENSURE PANEL CORNERS ARE FLUSH.**

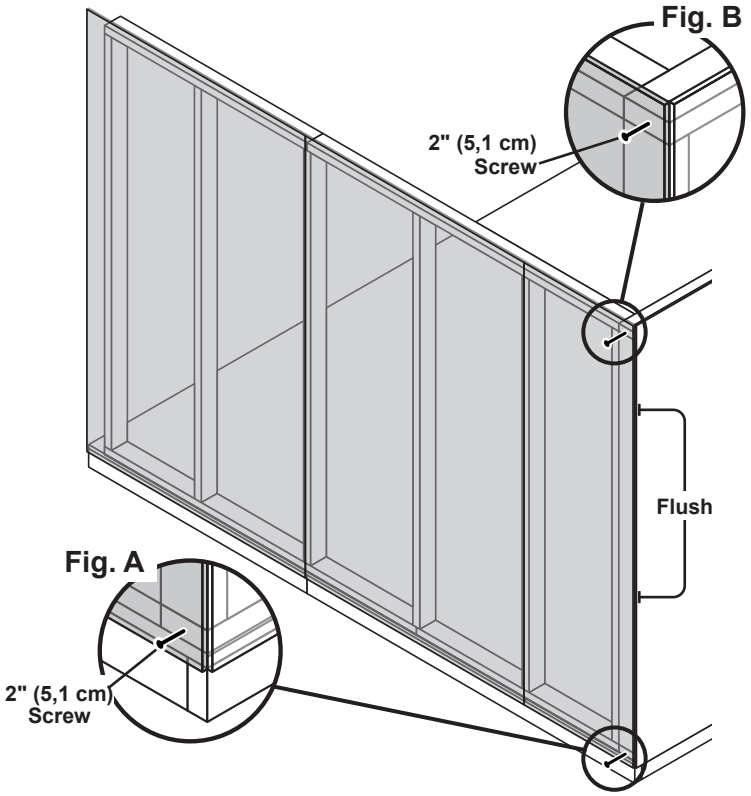

2

Secure lower edge of panels to floor with 2" nails spaced 6" apart.
Angle nails into floor frame **(Fig. C)**.

Secure panel to 16' wall stud with 1-1/2" nails spaced 6" apart.

3

Secure wall top plate with (1) 3" screw angled at the corner **(Fig. D)**.

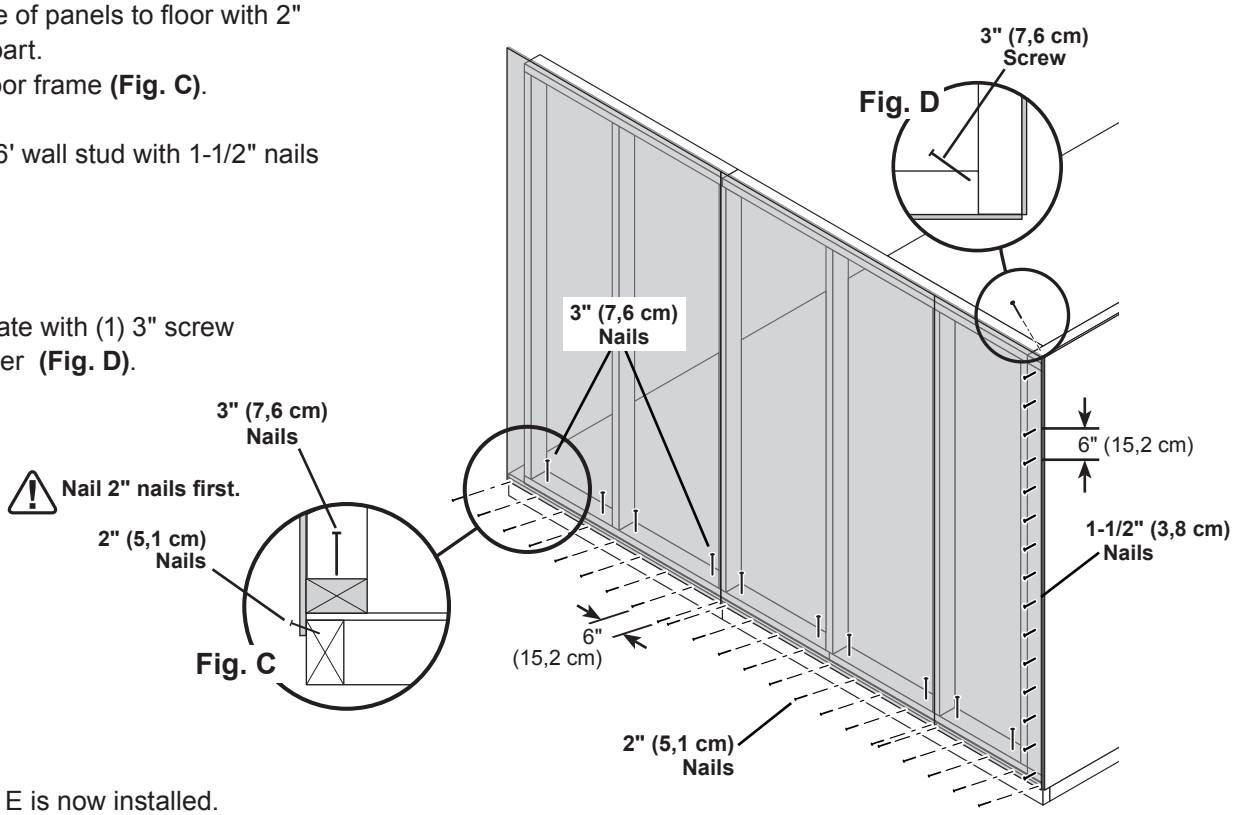

FINISH

Your 10' wall B or E is now installed.

16' WALL C INSTALLATION

PARTS REQUIRED:



- **x2** — 2" (5,1 cm)
- **x16** — 3" (7,6 cm)
- **x37** — 2" (5,1 cm)
- **x3** — 3" (7,6 cm)
- **x13** — 1-1/2" (3,8 cm)
- **x1** — **TJ** *Temporary Brace* 2 x 4 x 92-5/8" (5,1 x 10,2 x 235 cm)

BEGIN

1

Install the 16' wall centered on floor. 1-1/2" (3,8 cm) overlap is to the top.

Use **TJ** as a temporary brace. Secure with (2) 3" screws.

2

Secure wall with (1) 2" screw through 10' gable wall panel into 16' wall bottom and top plates **(Fig. B, Fig. A)**. ***Secure wall to bottom plate first.***

ENSURE PANEL CORNERS ARE FLUSH.

3

Secure lower edge of wall panels to floor frame with 2" nails spaced 6" apart. Angle nails into floor frame **(Fig. C)**.

Secure wall bottom plates to floor with 3" nails **(Fig. C)**.

4

Secure 10' wall panel to 16' wall stud with 1-1/2" nails spaced 6" apart.

5

Secure gable wall top plate with (1) 3" screw angled at the corner **(Fig. D)**.

FINISH

Your 16' wall C is now installed.

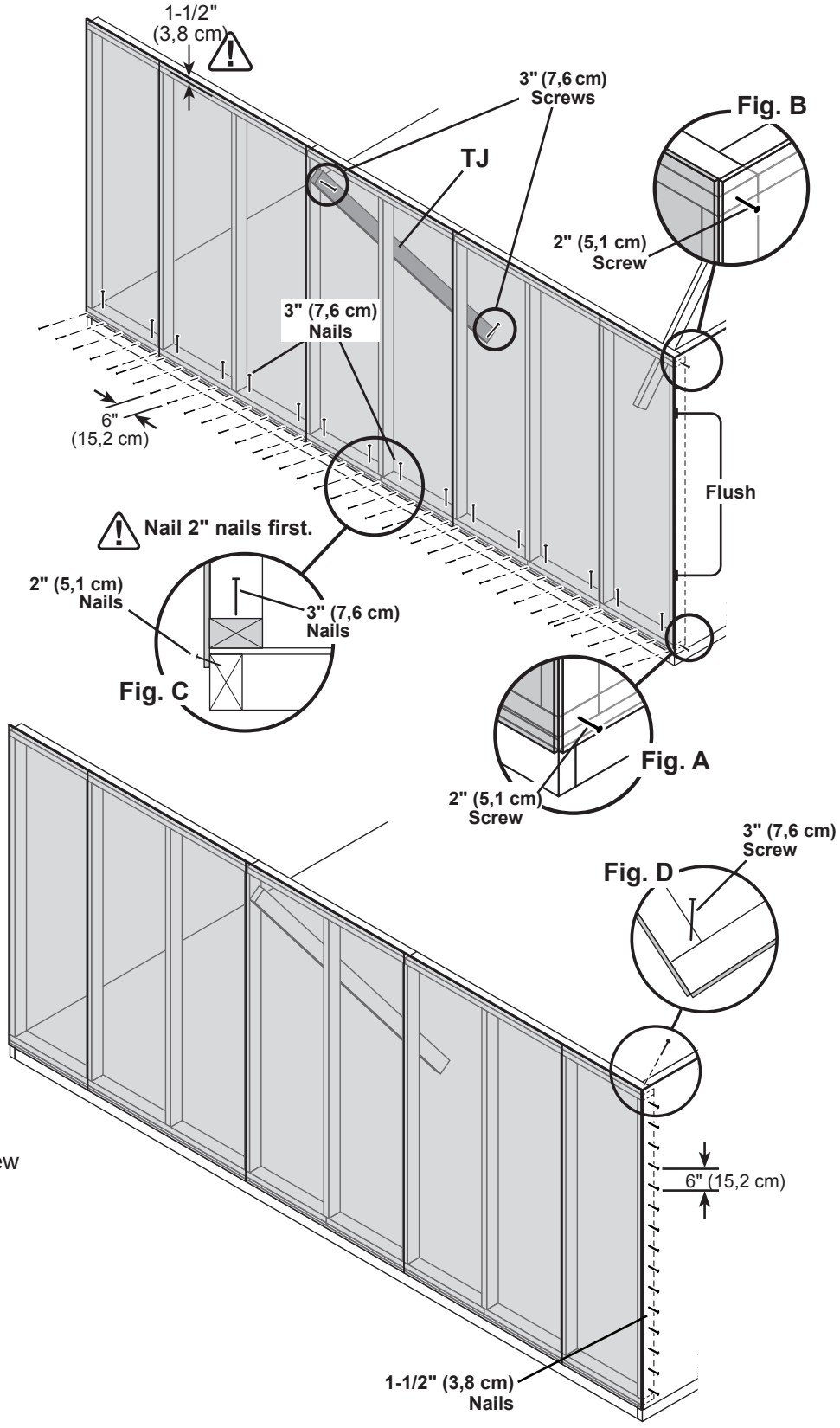

10' WALL A or B INSTALLATION

PARTS REQUIRED

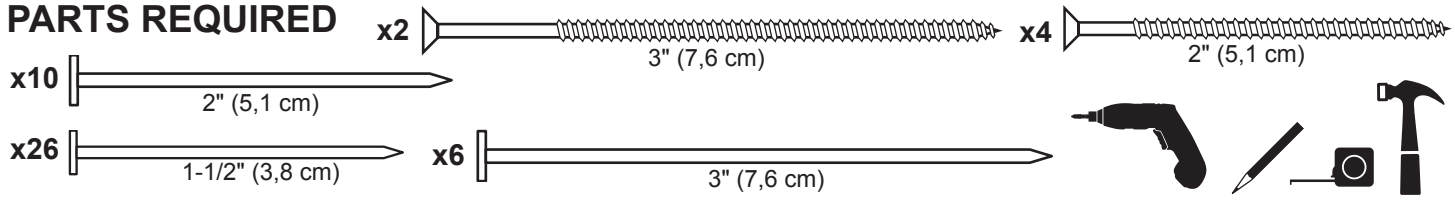

BEGIN

1

Place 10' wall on floor centered between 16' walls.

Secure wall with 2" screws into top and bottom plates **(Fig. A, Fig. B)**.

Secure wall to bottom plate first.

⚠ ENSURE PANEL CORNERS ARE FLUSH. ⚠

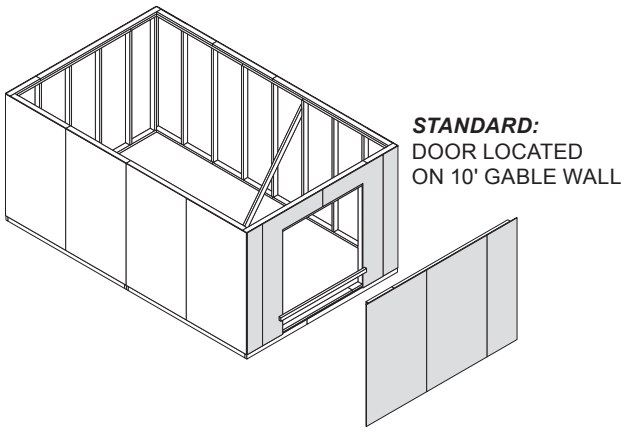

STANDARD:
DOOR LOCATED
ON 10' GABLE WALL

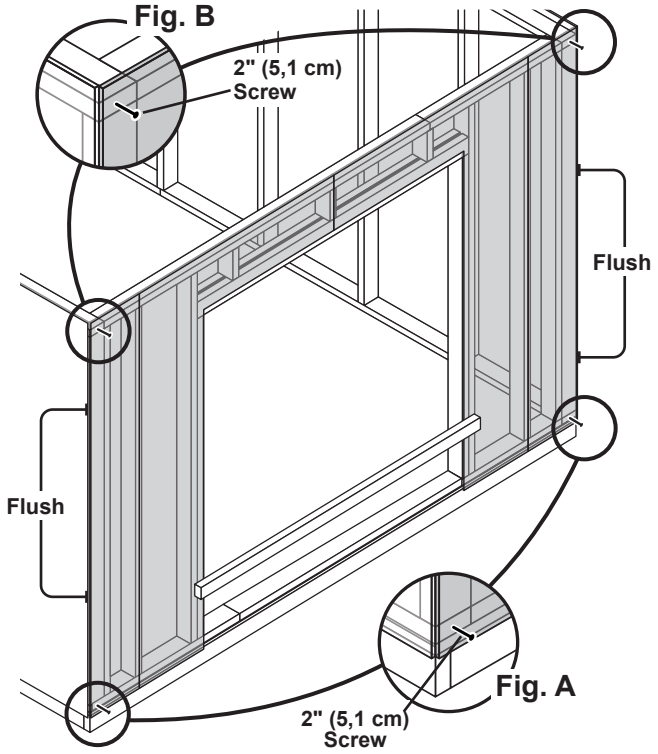

2

Nail lower edge of panels to floor with 2" nails spaced 6" apart.
Angle nails into floor frame **(Fig. C)**.

Nail panels to 16' wall studs with 1-1/2" nails spaced 6" apart.

3

Secure wall top plates with 3" screws at each corner at an angle **(Fig. D)**.

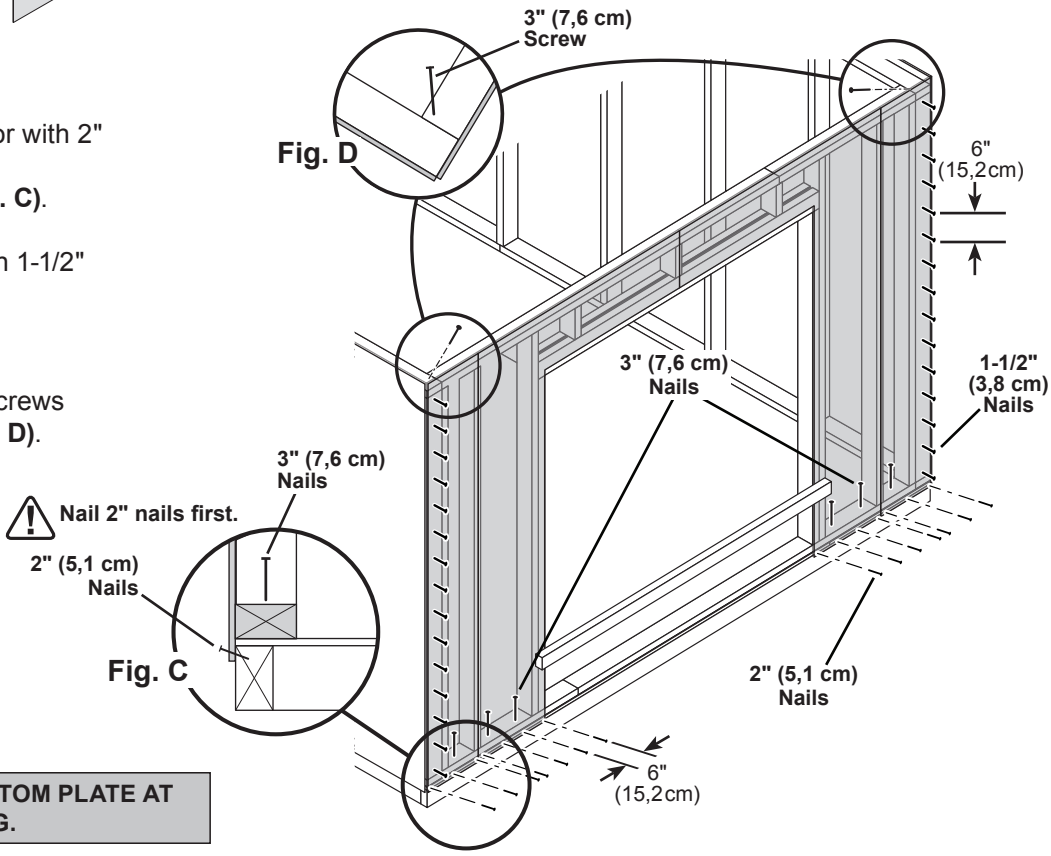

FINISH

Your walls are now installed.

CUT OUT AND REMOVE BOTTOM PLATE AT DOOR OPENING.

WALL DOUBLERS INSTALLATION

PARTS REQUIRED:

x72 — 3" (7,6 cm)

x2 **SP** — 2 x 4 x 48" (5,1 x 10,2 x 121,9 cm)

x2 **RL** — 2 x 4 x 24" (5,1 x 10,2 x 61 cm)

x2 **TJ** — 2 x 4 x 92-1/2" (5,1 x 10,2 x 235 cm)

x2 **TP** — 2 x 4 x 96" (5,1 x 10,2 x 243,8 cm)

x2 **STL** — 2 x 4 x 44-1/2" (5,1 x 10,2 x 121,9 cm)

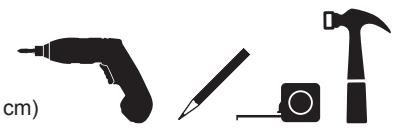

BEGIN

1 Orient parts on top of wall frames. Measure and mark from end of boards. Secure from top with (2) 3" nails spaced every 24" **(Fig. A).**

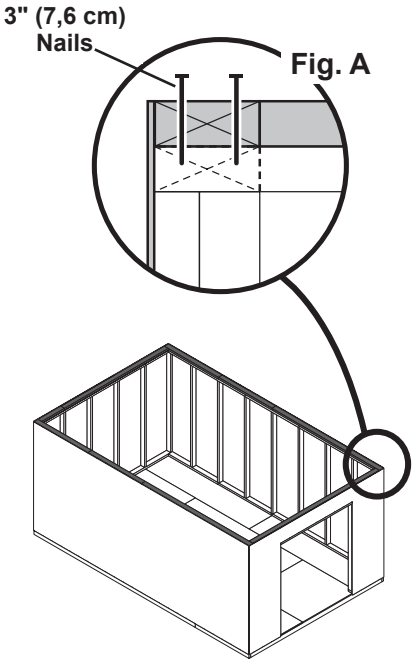

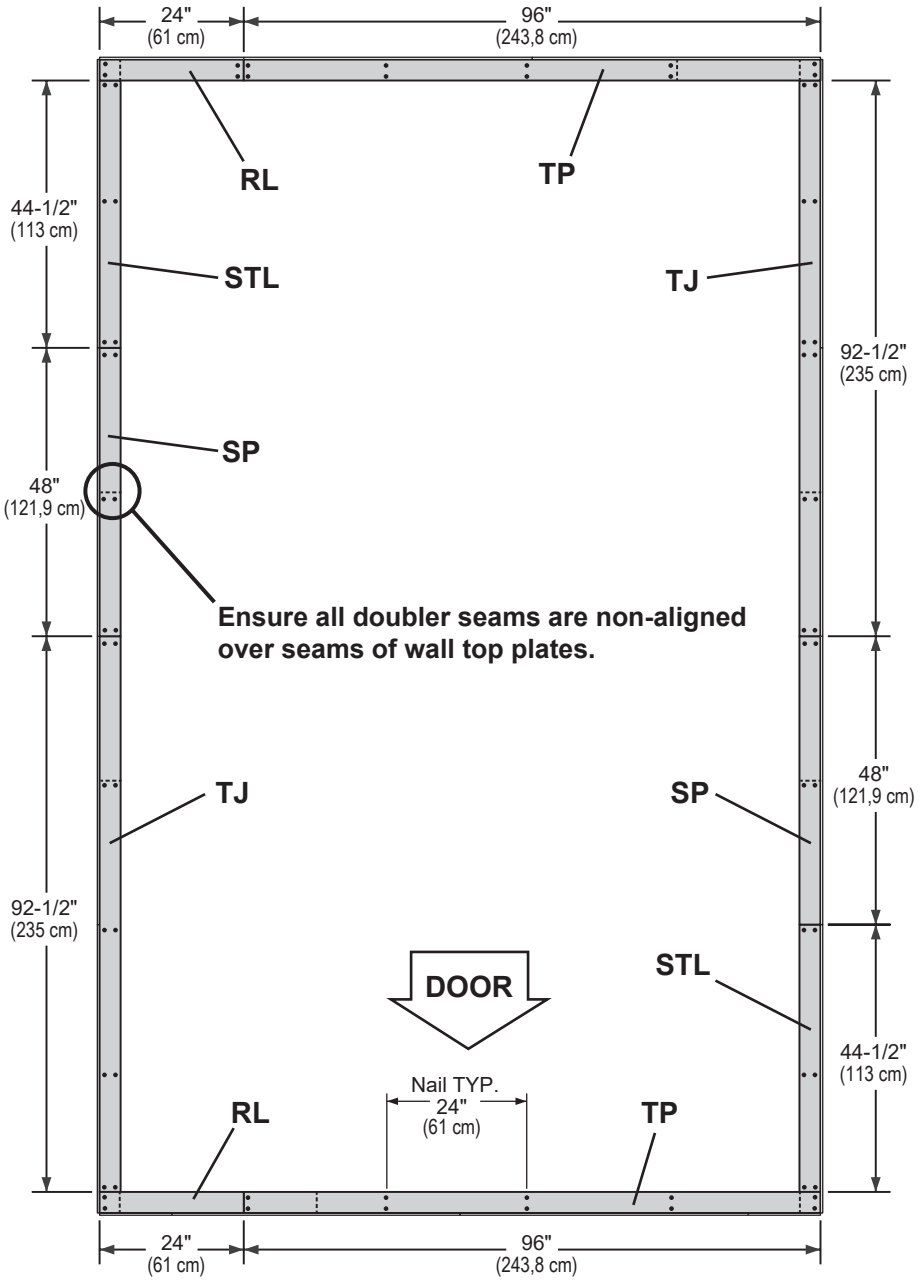

FINISH

Your wall doublers are now installed.

RAFTERS

PARTS REQUIRED:

x16 6 x 24" (15,2 x 60,9 cm)

x18 **AD**
2 x 4 x 65" (5,1 x 10,2 x 165,1 cm)

Temporary Support
x1 **AF** 2 x 4 x 18-1/8" (5,1 x 10,2 x 46 cm)

x192 2" (5,1 cm)

HINT:
Use floor and walls to help assemble rafters!

Build (2) rafter assemblies with (1) gusset (Fig. B).

BEGIN

1 Place two rafter-halves **AD** in the two corners of eave wall, flush to panels and end studs.
Flush rafters at peak. Secure gusset to rafters with 2" nails following the pattern shown **(Fig. A)**.

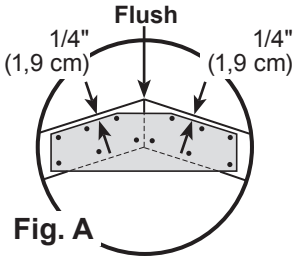

Fig. A

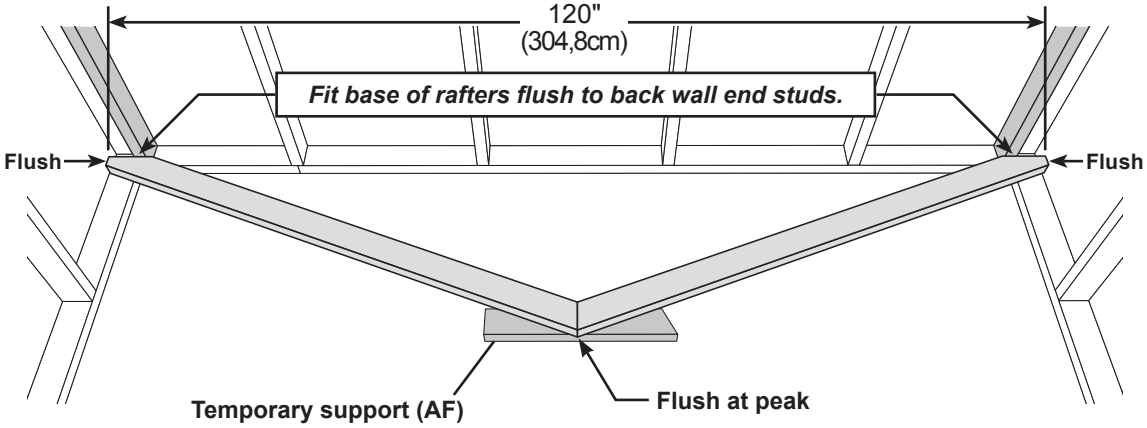

SET ASIDE THESE TWO RAFTER ASSEMBLIES.

Build 7 rafter assemblies with (2) gussets (Fig. C).

2 Place two rafter-halves **AD** in the two corners of eave wall, flush to panels and end studs (step - 1).
Flush rafters at peak. Secure gusset to rafters with 2" nails following the pattern shown **(FIg. A)**.

3 Flip over rafter assembly and fasten second gusset to other side with 2" nails **(FIg. C)**.

Fig. B - ***Build 2***

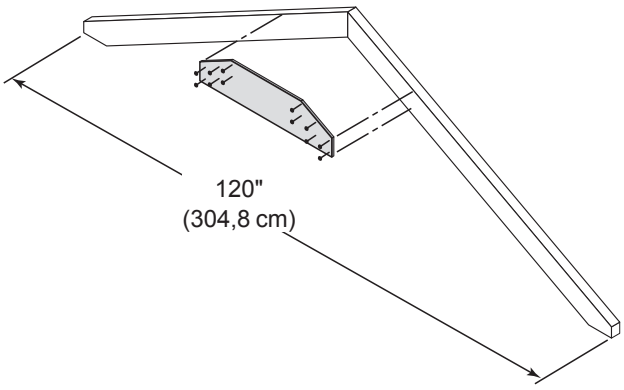

Fig. C - ***Build 7***

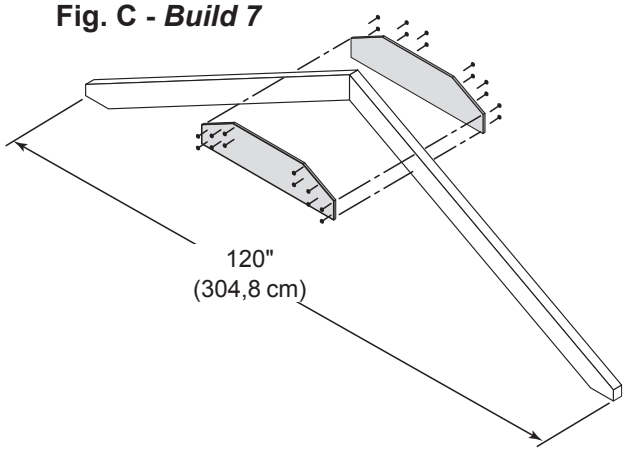

FINISH

Your rafters are now assembled.

RAFTER INSTALLATION

PARTS REQUIRED:

x7 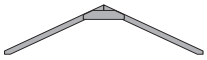 Two-Gusset Assembled

x2 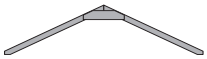 One-Gusset Assembled

x36 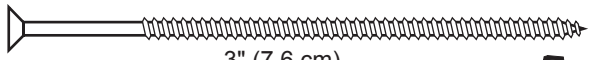
3" (7,6 cm)

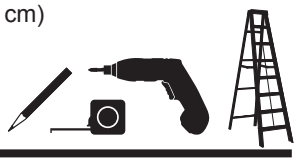

BEGIN

1 Align rafters over the wall studs. 

Check that you have the measurements shown.

Secure rafters with (2) 3" screws angled at each end **(Fig. A, Fig. B)**.

Secure gable end rafters with (1) 3" screw through top of rafter into doubler **(Fig. C)**.

Secure rafters on opposite side.

Maintain the measurements between rafters.

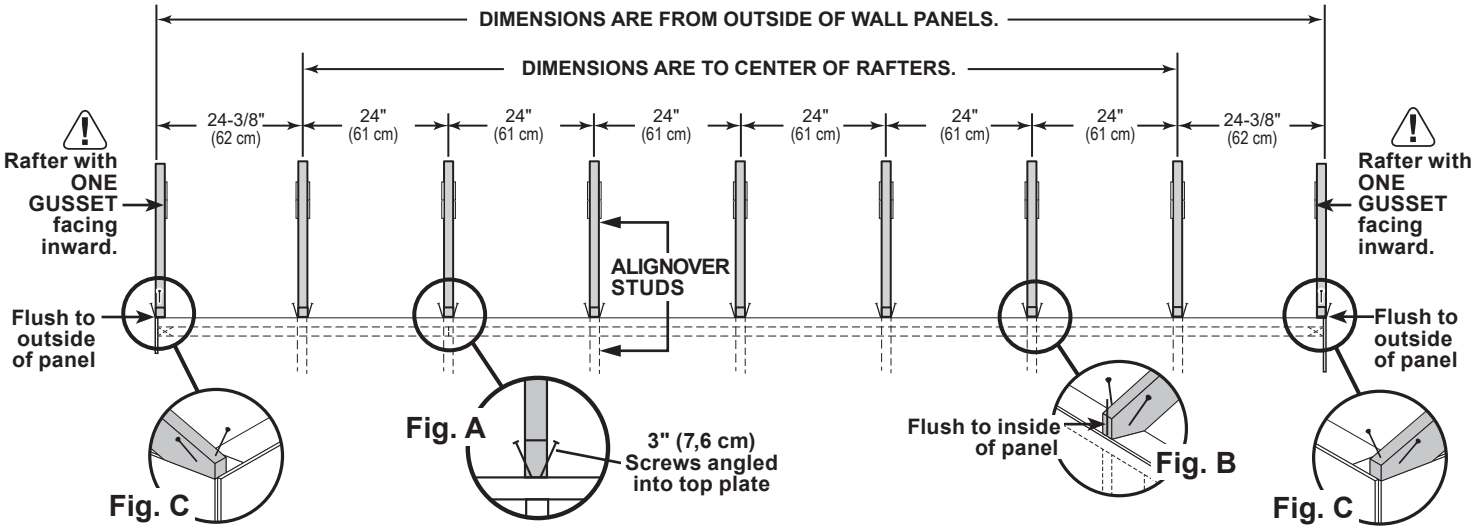

FINISH

Your rafters are now installed.

GABLE UNITS

PARTS REQUIRED:

x4 AF
2 x 4 x 18-1/8" (5,1 x 10,2 x 46 cm)

x24
1-1/2" (3,8cm)

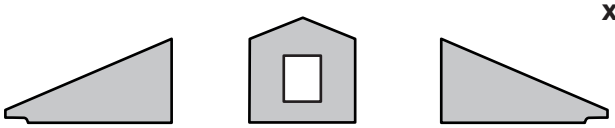

x2 x2 x2

Install gable panels with the primed side facing up.

BEGIN

1 Orient parts **AF** on the flat side, as shown. Inistall middle gable panel at measurements shown. Secure with 1-1/2" nails spaced 6" apart along edge.

2 Install left and right panels on **AF**, flush to middle gable panel. Secure with 1-1/2" nails spaced 6" apart along edge. Measure and mark the center of the middle gable panel

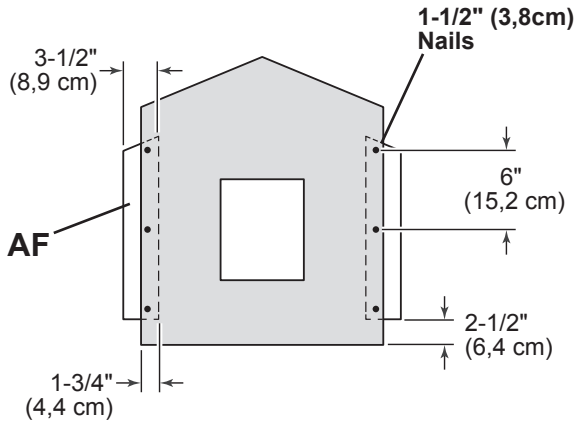

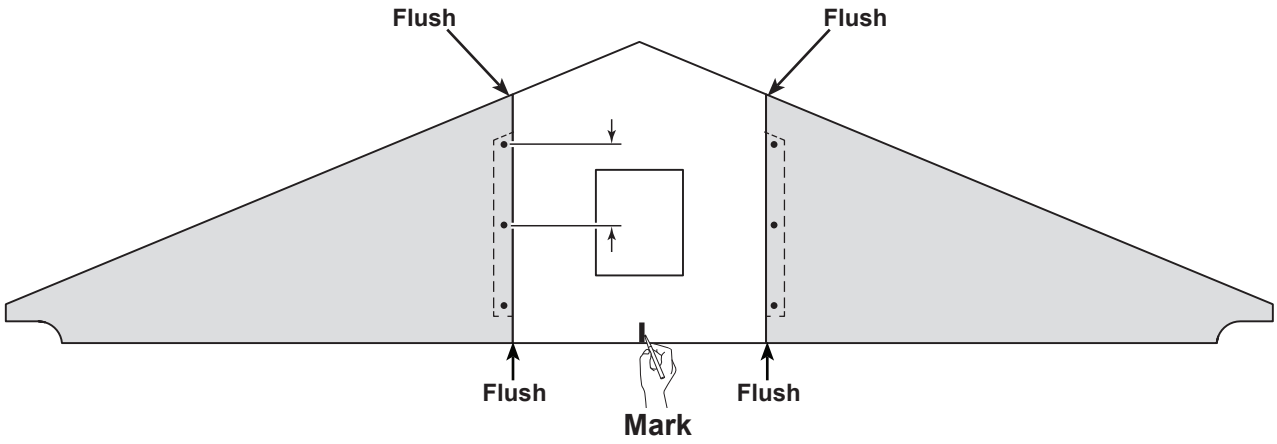

Repeat steps 1 - 2 to build the 2nd gable unit.

FINISH

Your gable units are now assembled.

GABLE INSTALLATION

PARTS REQUIRED:

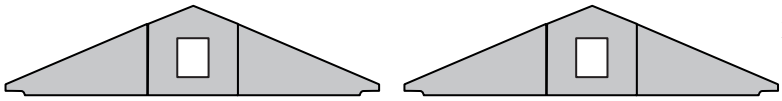

Assembled Gable Units

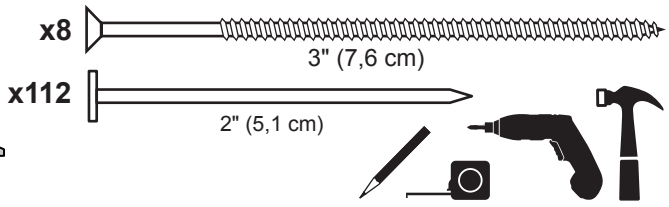

BEGIN

1 Measure 2-1/2" down from top plate doubler and mark at each side as shown. Set gable unit on top plate. Fasten with (1) 2" nail on each side.

⚠ **BE SURE GABLE IS CENTERED ON WALL BEFORE NAILING.** ⚠

2 Continue nailing lower edge of panels to wall doubler with 2" nails spaced 6" apart.

3 Working inside, secure gable unit with (2) 3" screws angled into each **AF** at an angle **(Fig. A)**.

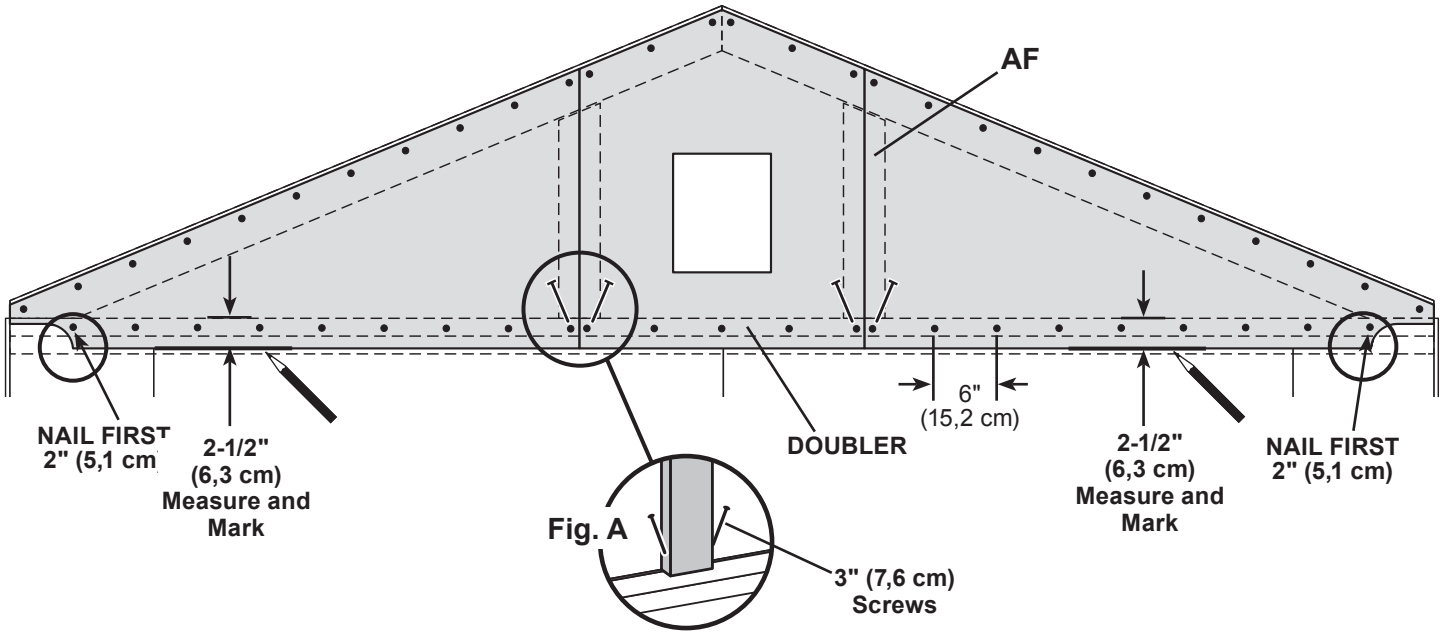

4 Continue securing panels to rafter with 2" nails spaced 6" apart.

Repeat steps to install the opposite side gable.

FINISH

Your gable units are now installed

10' x 16' ROOF PANELS

PARTS REQUIRED:

x1 — 7/16 x 48 x 96" (1,1 x 121,9 x 243,8 cm)

GAA — 3/4" GAUGE BLOCK

x4 — 2" (5,1 cm)



Roof panels may cause serious injury until securely fastened.

Note: Install all roof panels with the rough side up (painted grid lines).

✓BEGIN

1

Place (1) **48" x 96"** panel on rafters with a 3/4" measurement on the rafter **(Fig A)** and the panel flush at the peak **(Fig. B)**.

Secure panel with (2) 2" nails in the corners.

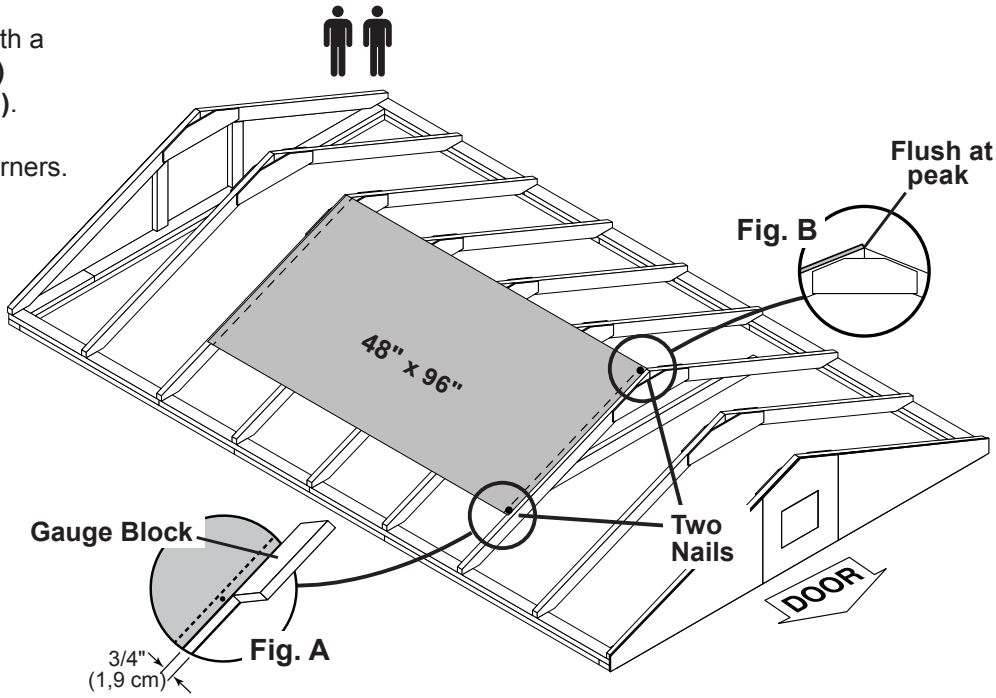

2

Move to the opposite end.
Using the long edge of the panel as a lever, move the panel side-to-side until the top corner is flush to the peak **(Fig. B)** and there is a 3/4" measurement on the rafter **(Fig. A)**.

Secure panel with (2) 2" nails in the corners.

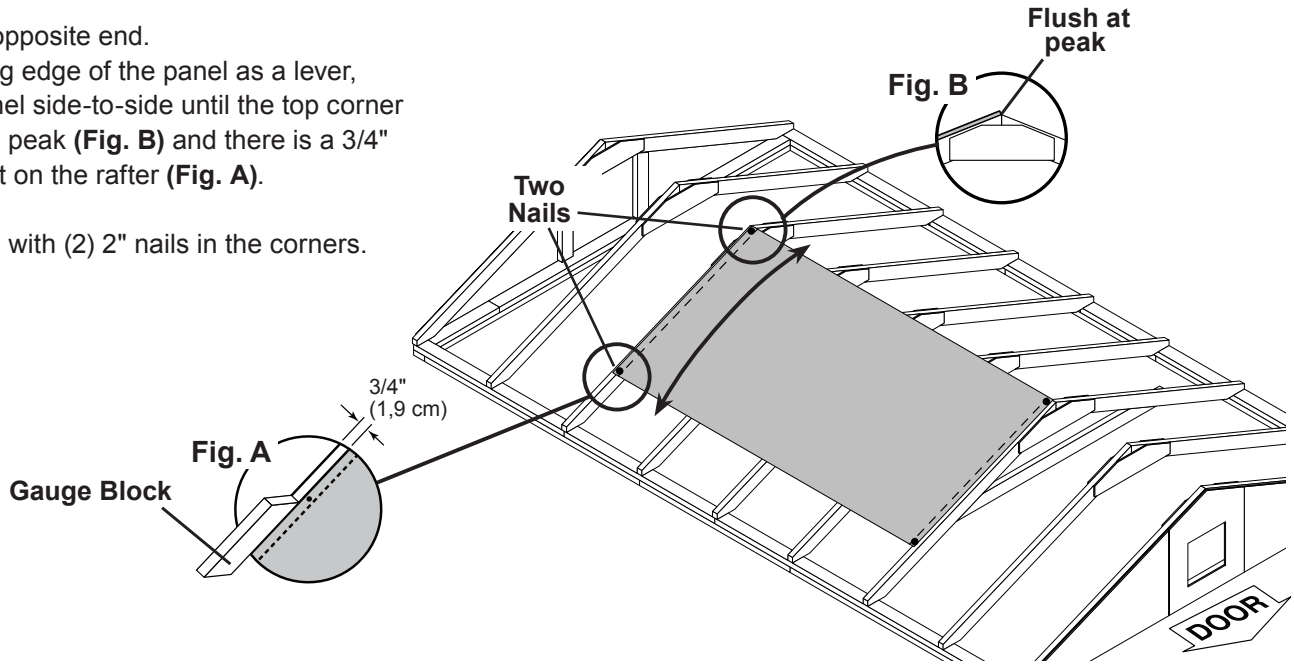

10' x 16' ROOF PANELS

PARTS REQUIRED:

x18

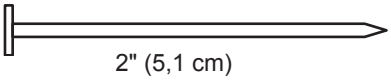

2" (5,1 cm)

x2

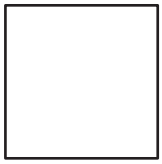

7/16 x 48 x 96"
(1,1 x 121,9 x 243,8 cm)



3

Install **48" x 47-7/8"** roof panel flush to the installed panel and flush at the peak **(Fig. B)**.

Secure panel with (1) 2" nail in each corner, as shown.

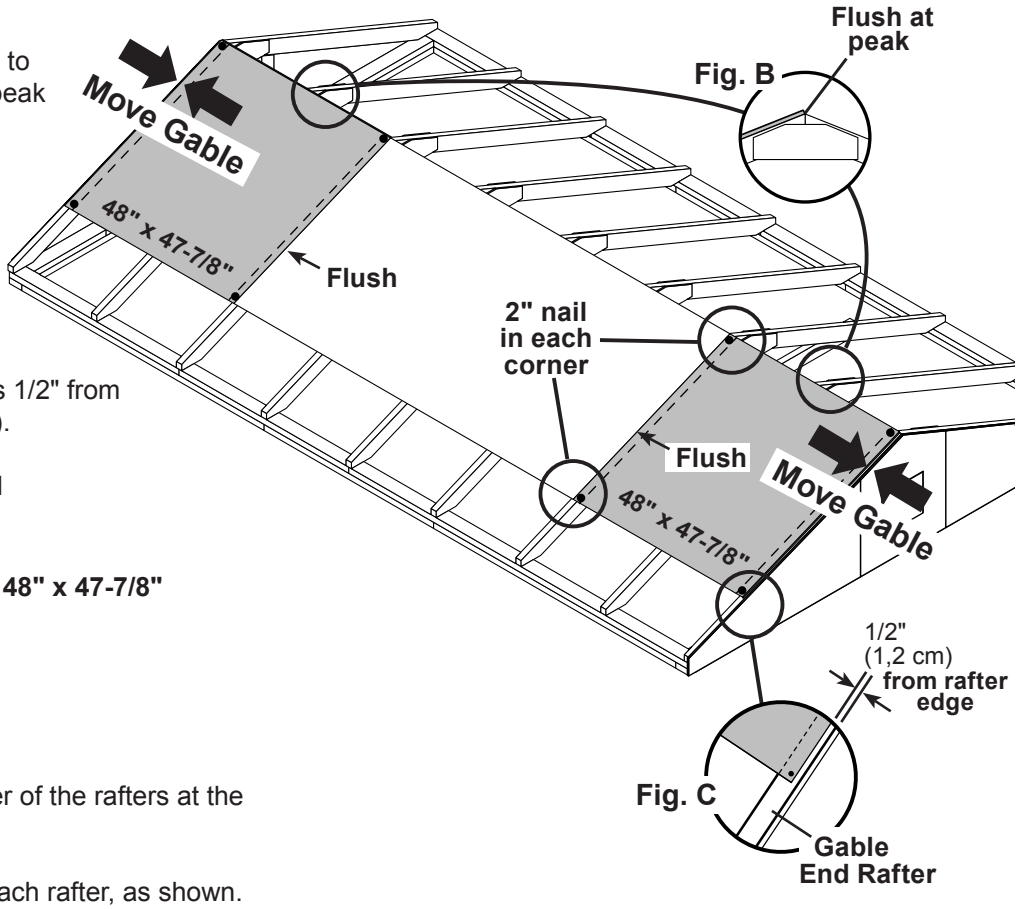

4

Move gable end rafter edge until it is 1/2" from the **48" x 47-7/8"** roof panel **(Fig. C)**.

Finish securing panel with (1) 2" nail in the outside corners.

Repeat steps 3 - 4 to install the 2nd **48" x 47-7/8"** roof panel, as shown.

5

Maintain spacing between the center of the rafters at the lower edge of the panels **(Fig. D)**.

Secure panels with (1) 2" nail into each rafter, as shown.

Move to the top of the panel and keep spacing between the center of the rafters.

Secure panels with (1) 2" nail into each rafter.

Fig. D

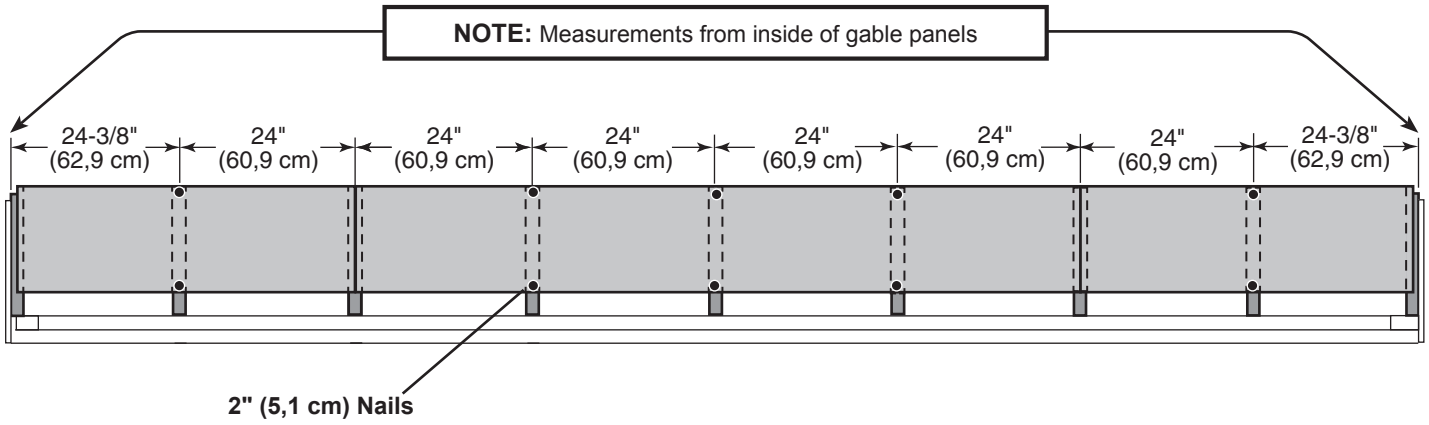

10' x 16' ROOF PANELS

PARTS REQUIRED:

x2 23-1/2" x48" (59,7 x 121,9 cm)

x1 23-1/2" x 96" (59,7 x 243,8 cm)

GAA

3/4" GAUGE BLOCK

x12 2" (5,1 cm)

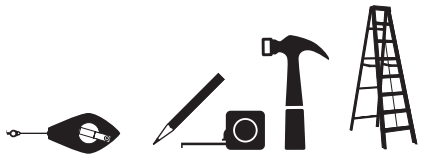

6 Install **23-7/8" x 96"** roof panel with a 3/4" measurement on the rafter **(Fig A)** and flush to the upper installed panels. Secure panels with (1) 2" nail in each corner.

7 Install (2) **23-7/8" x 48"** roof panels flush to the installed panels. Secure panels with (1) 2" nail in each corner.

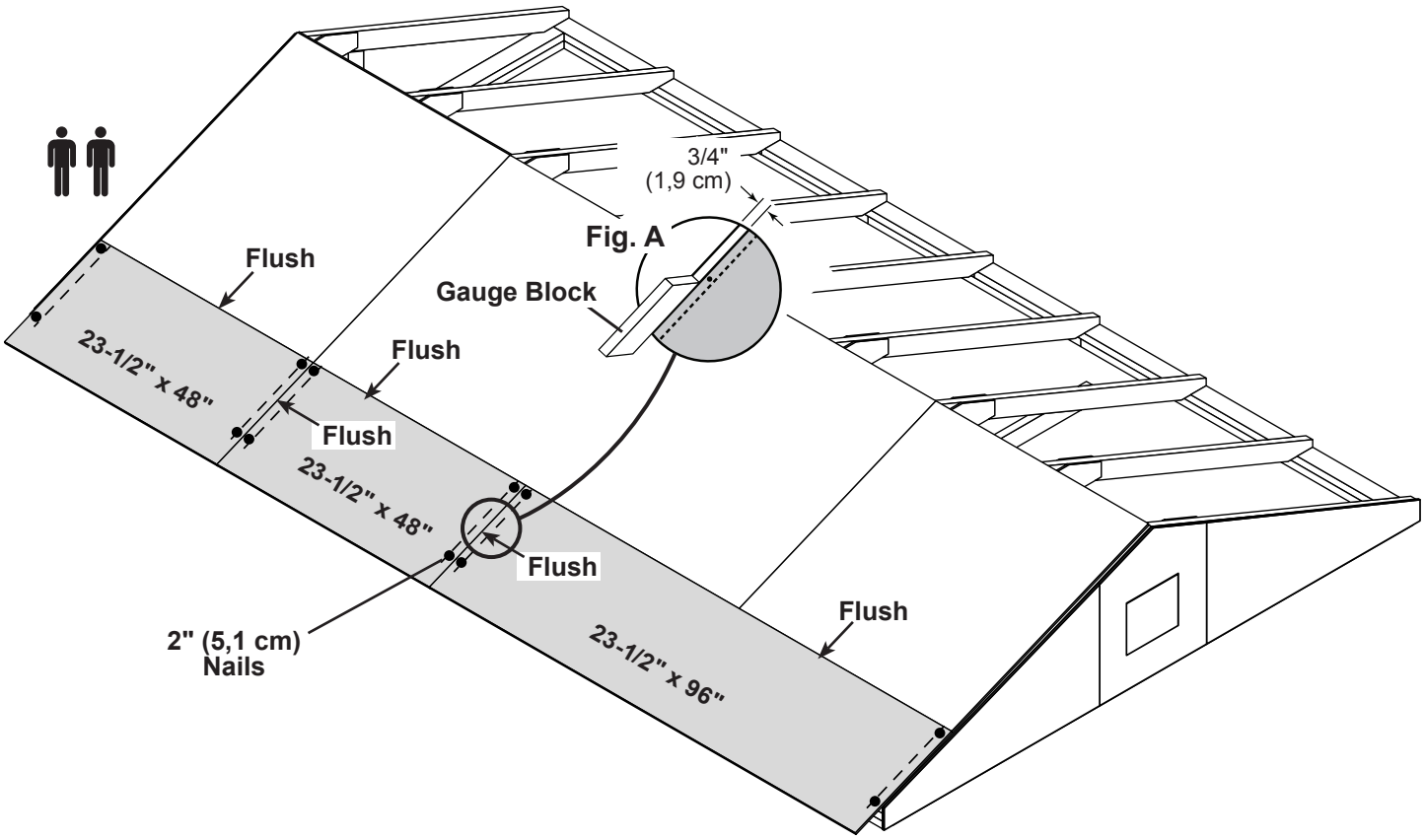

10' x 16' ROOF PANELS

PARTS REQUIRED:

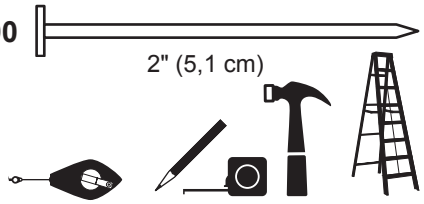

8 Secure all roof panels with 2" nails spaced 6" apart and 12" apart inside of the panels.

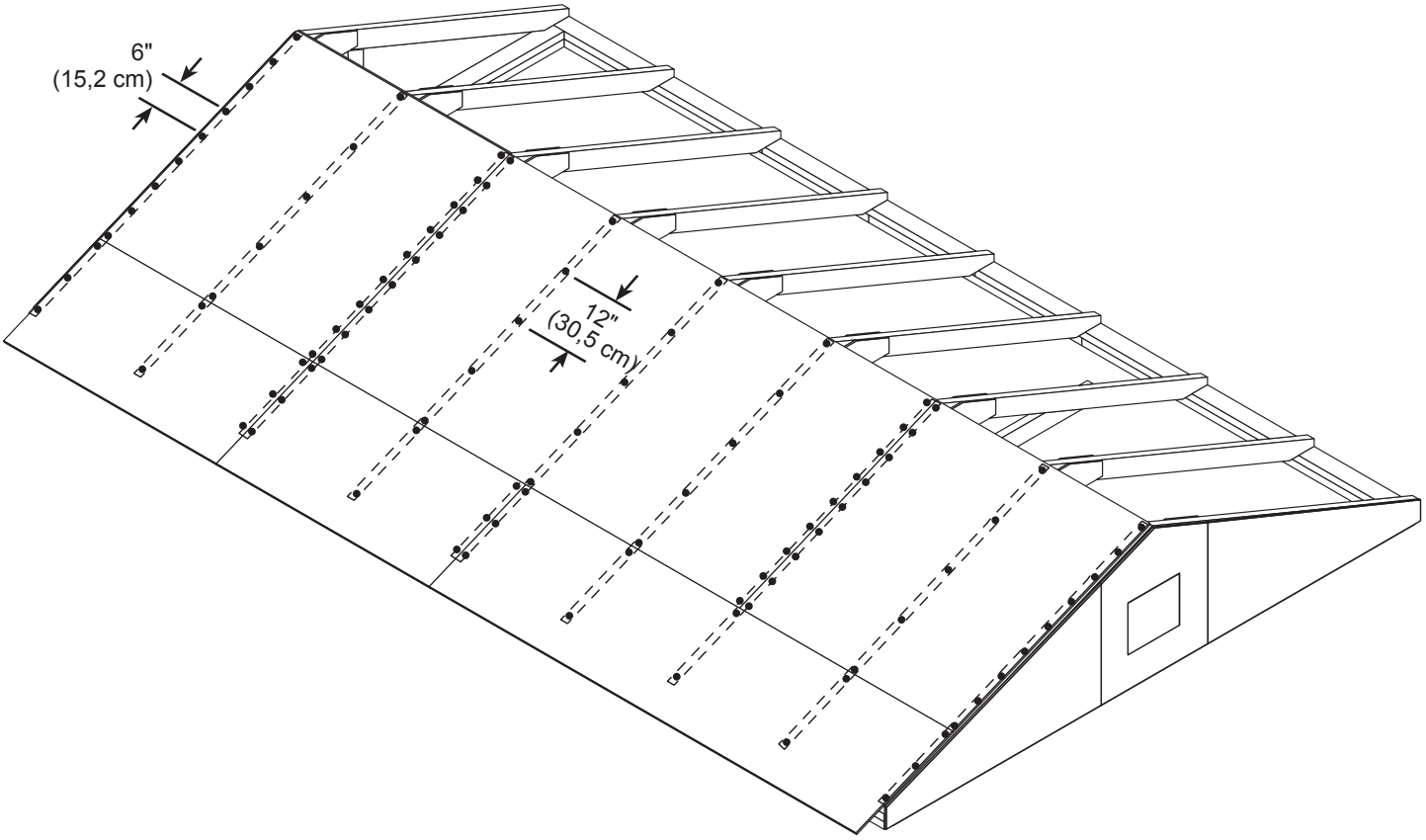

Repeat all steps to install roof panels on the opposite side.

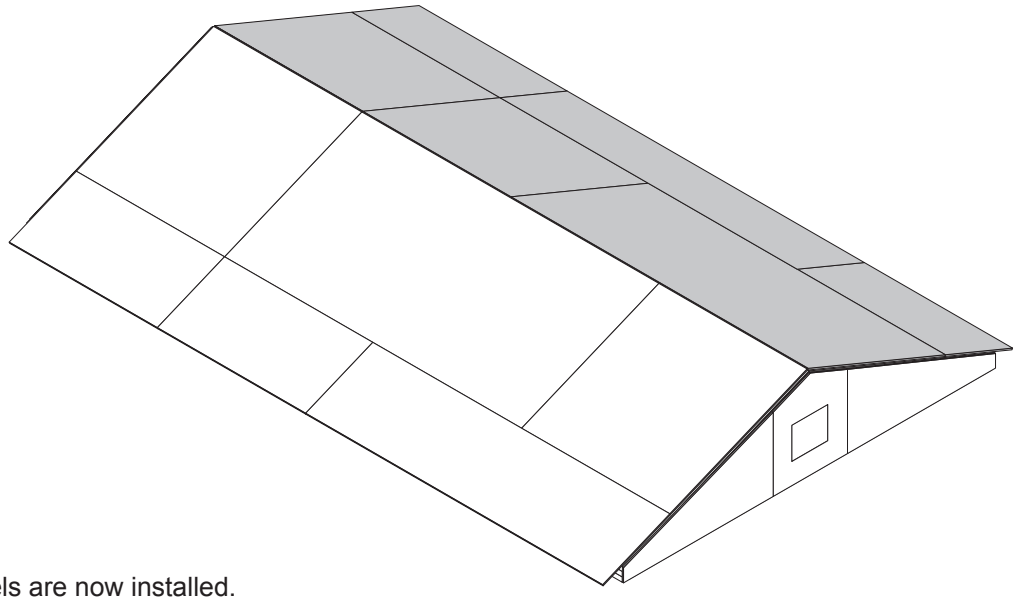

FINISH

Your roof panels are now installed.

GABLE FASCIA

PARTS REQUIRED:

x2 **AUR**
19/32" x 3-1/2" x 71-15/16" (1,5 x 8,9 x 182,7 cm)

x2 **AUL**
19/32" x 3-1/2" x 71-15/16" (1,5 x 8,9 x 182,7 cm)

x52
2" (5,1 cm)

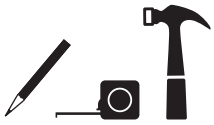

Install all trim with the primed side facing out.

BEGIN

1 Install front gable trim **AUR** and **AUL** flush to top of roof panels and flush at gable peak. Secure trim with 2" finishing nails spaced approximately 7-1/4" apart.

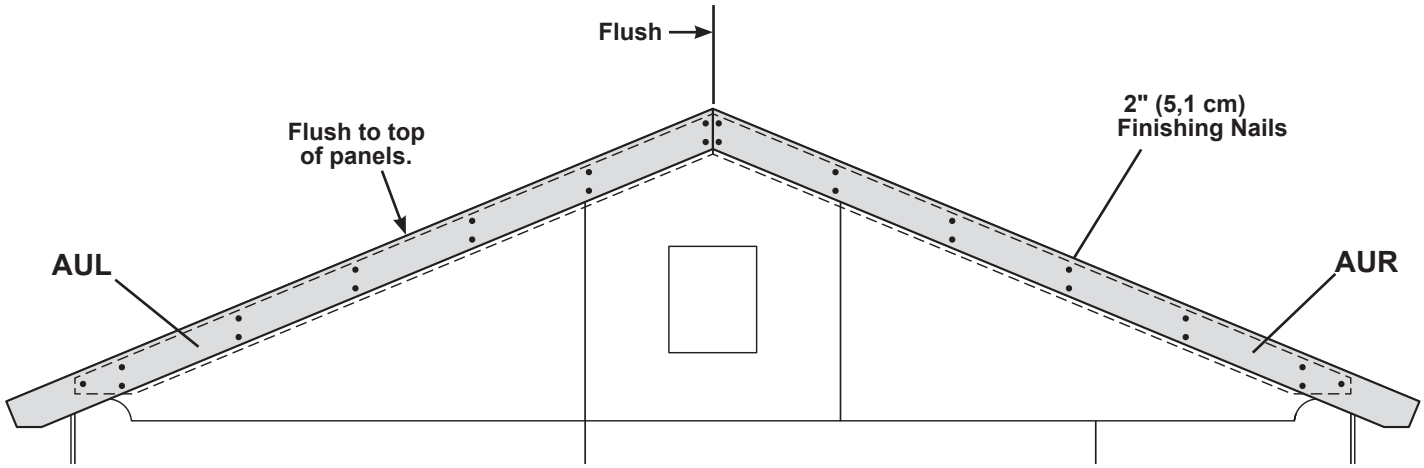

Repeat to install fascia on opposite side.

FINISH

Your gable fascia boards are now installed.

10' x 16' EAVE TRIM

PARTS REQUIRED:

x2 VF
2 x 6 x 48" (5,1 x 15,2 x 121,9 cm)

x2 WTC
2 x 6 x 49-3/4" (5,1 x 15,2 x 126,4 cm)

x2 VX
2 x 6 x 96" (5,1 x 15,2 x 243,8 cm)

x8 2" (5,1 cm)

x74 1-1/4" (3,2 cm)

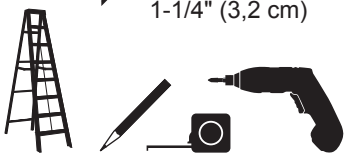

BEGIN

1. Install **VF** eave trim flush along edge of roof panel **(Fig. A)**.
Screw through roof panel into **VX** with 1-1/4" screws spaced approximately 7-1/2" apart, as shown.

2. Install **WTC** flush to edge of roof panel and flush to installed eave trim **VX**.
Screw through roof panel into **WTC** with 1-1/4" screws spaced approximately 7-1/2" apart, as shown.

3. Install **VF** flush to edge of roof panel and flush to installed eave trim **AS**.
Screw through roof panel into **VF** with 1-1/4" screws spaced approximately 7-1/2" apart, as shown.

NOTE: Final eave piece may need to be trimmed to fit.

Repeat installation on opposite side.

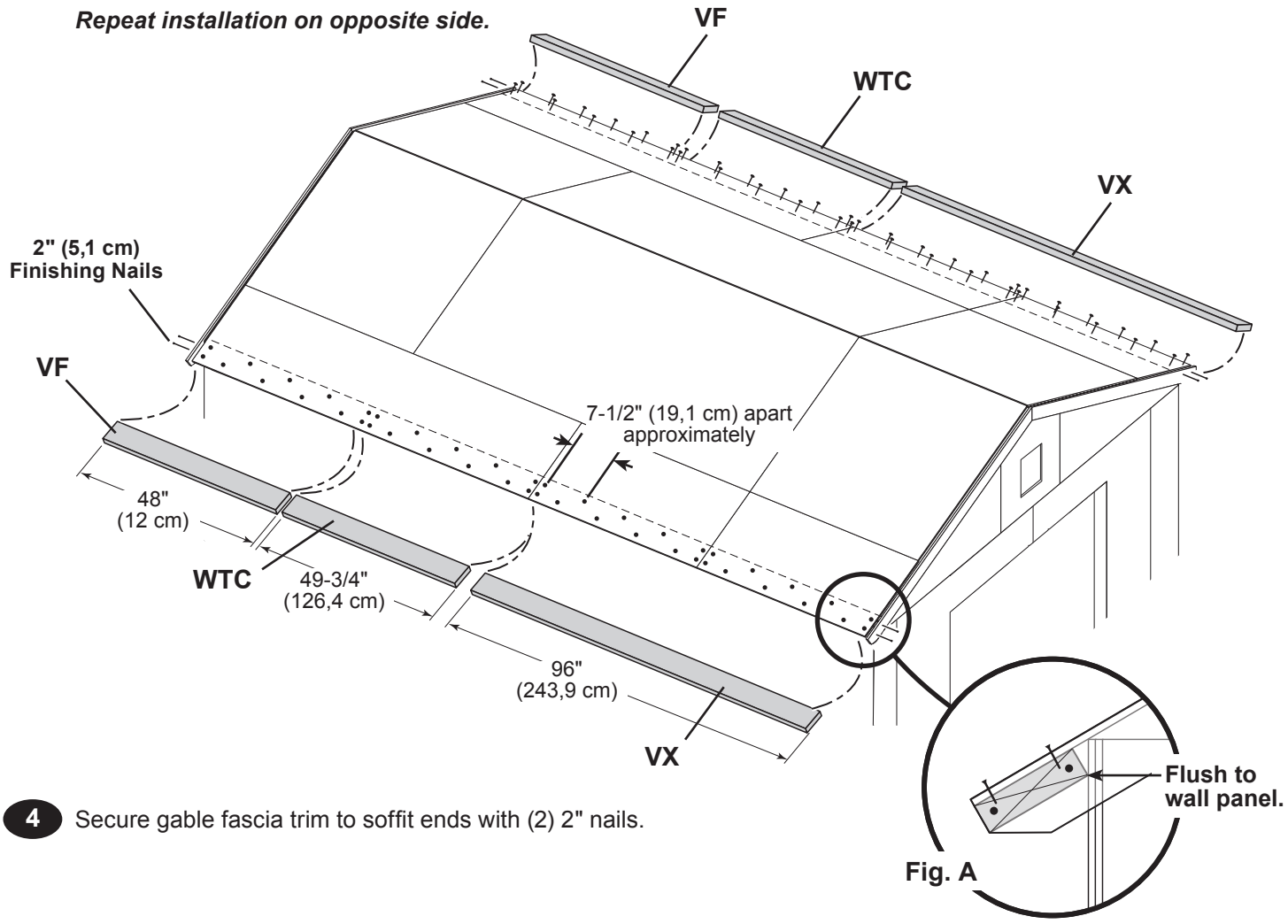

Fig. A

4. Secure gable fascia trim to soffit ends with (2) 2" nails.

FINISH

Your eave trim is now installed.

DOORS

PARTS REQUIRED:

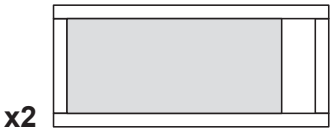
x2


x6

x2 . . DJD . . . .
5/4 x 3-1/2 x 72-3/8" (3,2 x 8,9 x 183,8 cm)

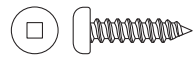
x24
1" (2,5 cm) #14 Screws


Square Drive Bit

✓BEGIN

1 Arrange parts as shown on a flat surface.

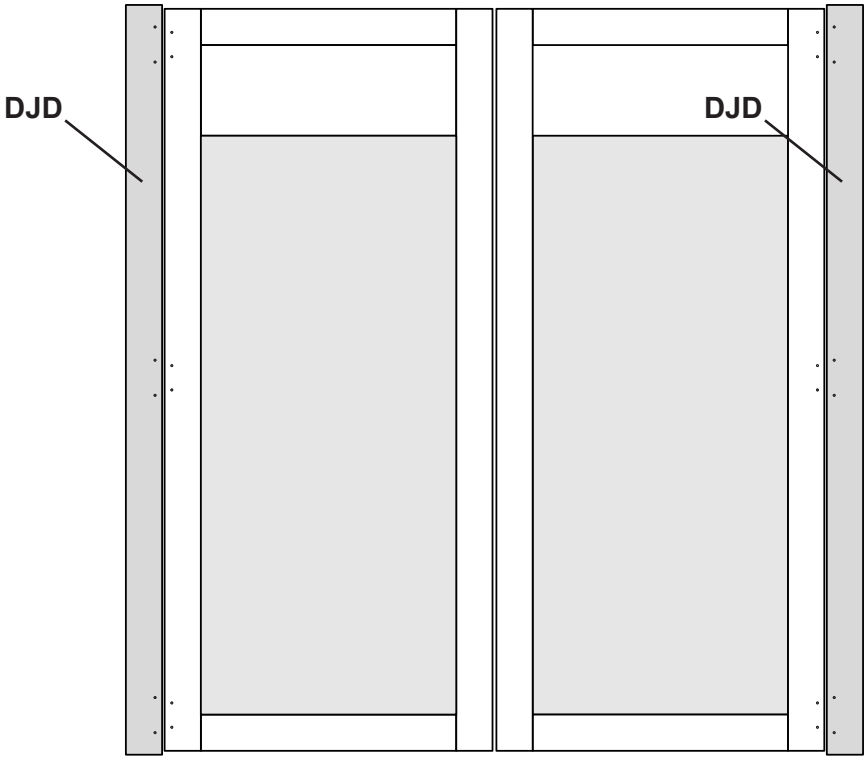

2 Align (6) hinges with pre-drilled holes in **DJD** and doors.

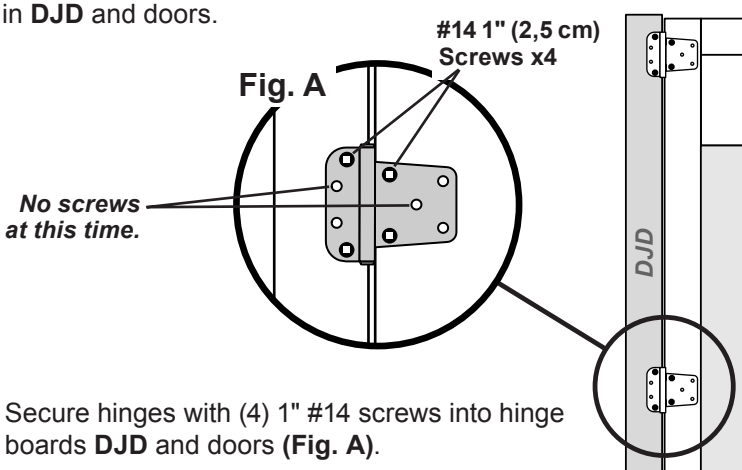

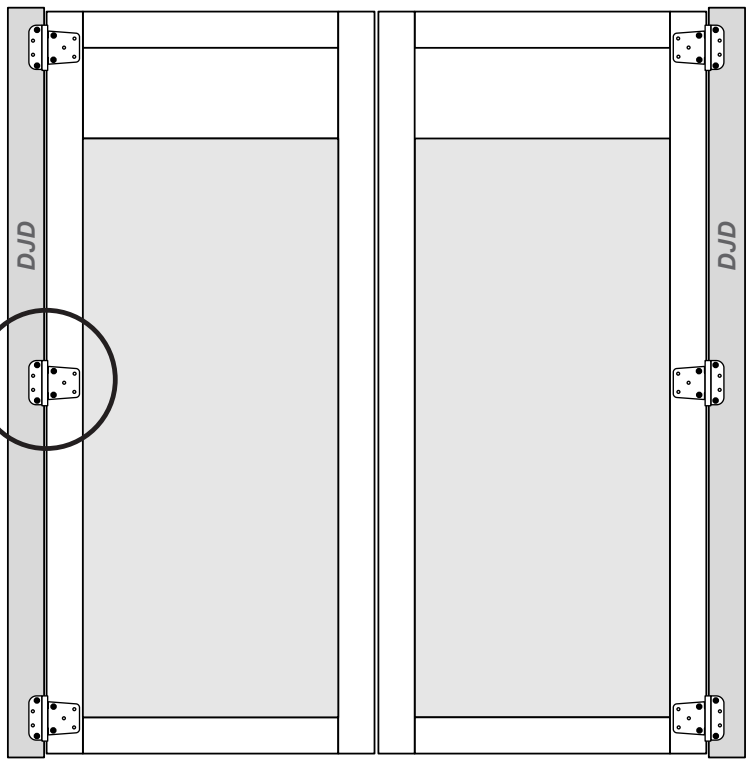

3 Secure hinges with (4) 1" #14 screws into hinge boards **DJD** and doors **(Fig. A)**.

DOORS

PARTS REQUIRED:

x30 1" (2,5 cm) #14 Screws

x8 3" (7,6 cm)

x2 **OO** *Temporary Support*
Door Stiffener 69" (175,3 cm)

Square Drive Bit

3/16" (5 mm) Drill Bit

4 Using holes in hinge as a guide, predrill (3) 3/16" holes 1" deep into door.

Predrill (2) 3/16" through-holes in hinge boards **DJD (Fig. B)**.

Fig. B

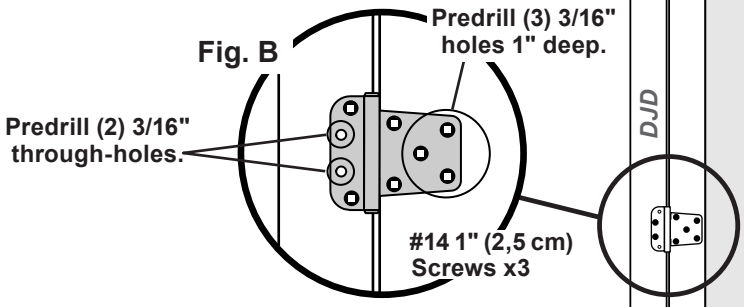

5 Secure hinges with (3) 1" screws into door trim.

Move pre-installed 1" screws in DJD to two middle hole locations (Fig. C).

Fig. C

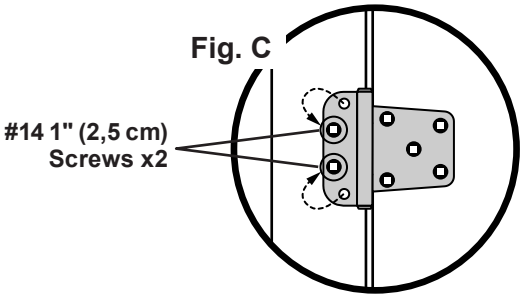

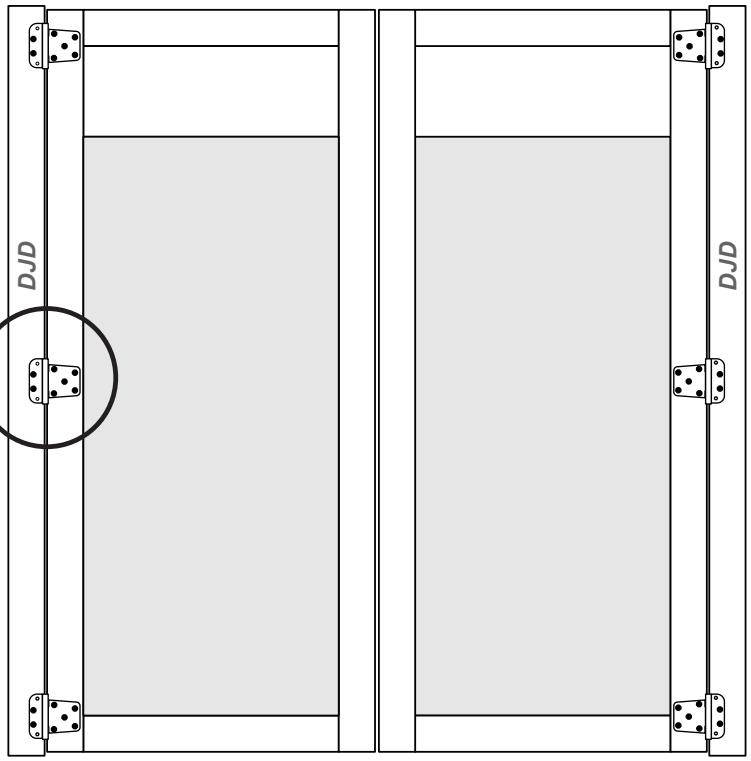

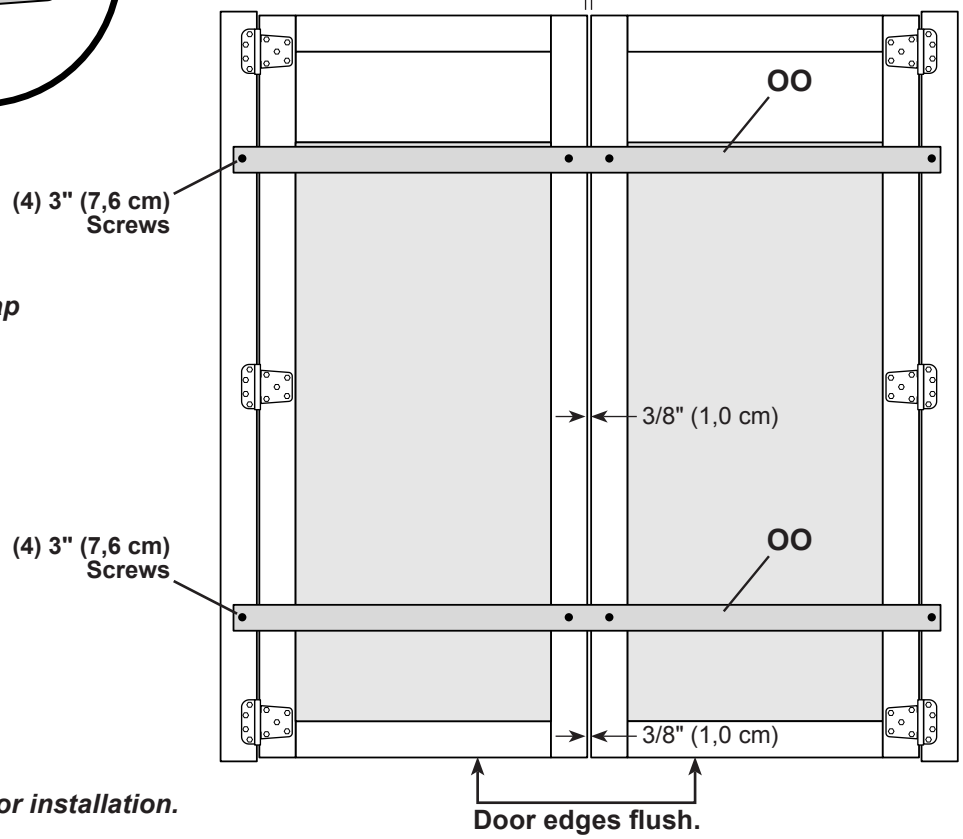

⚠ ***Ensure doors have a 3/8"gap along the entire length.***

6 Securly hold doors together with (2) **OO** as temporary supports, as shown.

Your doors are now ready for installation.

DOORS

PARTS REQUIRED:

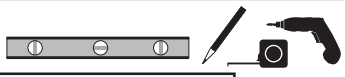

x12 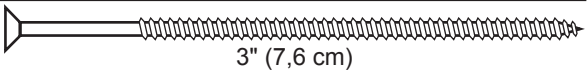
3" (7,6 cm)

x1 TP *Temporary Support*
2 x 4 x 96" (5,1 x 10,2 x 243,8 cm)

x12 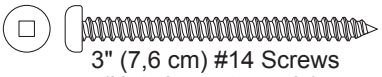
3" (7,6 cm) #14 Screws
(Not shown to scale)

x1 *Temporary Spacer* 3/8 x 3-1/2 x 83-1/4" (1 x 8,9 x 211,5 cm)

7 Install **TP** as a temporary support ledger board 3/8" below wall panels. ***TP must be level.***
Use (1) corner trim board (83-1/2") as a temporary spacer to ensure the 3/8" measurement under wall panels **(Fig. A)**.
Secure **TP** with (2) 3" screws. ***Remove the temporary 3/8" spacer.***

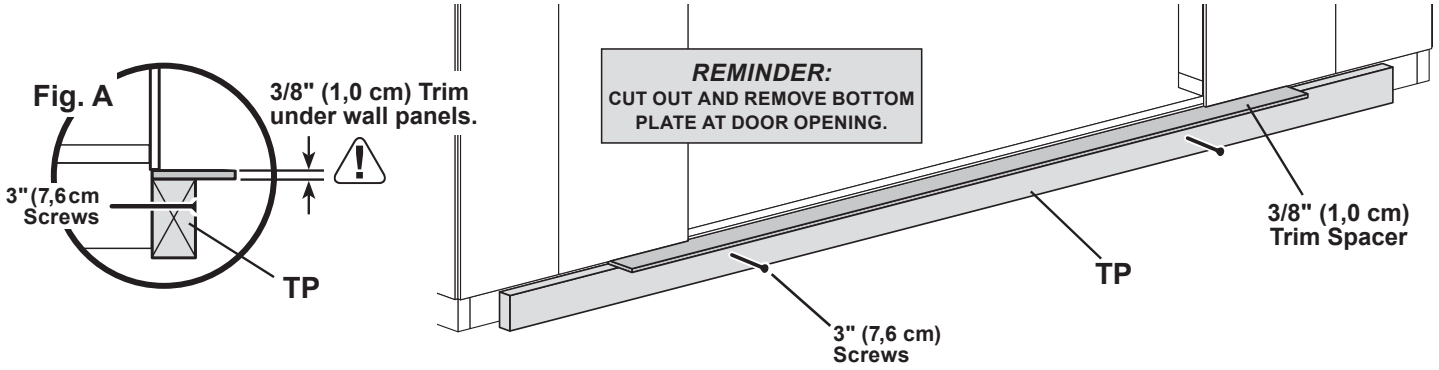

8 Align the door gap to the seam between panels **(Fig. B)**. ***Doors must be level.***

9 Secure hinge boards to wall supports and floor with (10) evenly spaced 3" screws, as shown.

10 Secure hinges with (12) 3" #14 screws into hinge boards **DJD (Fig. D)**.

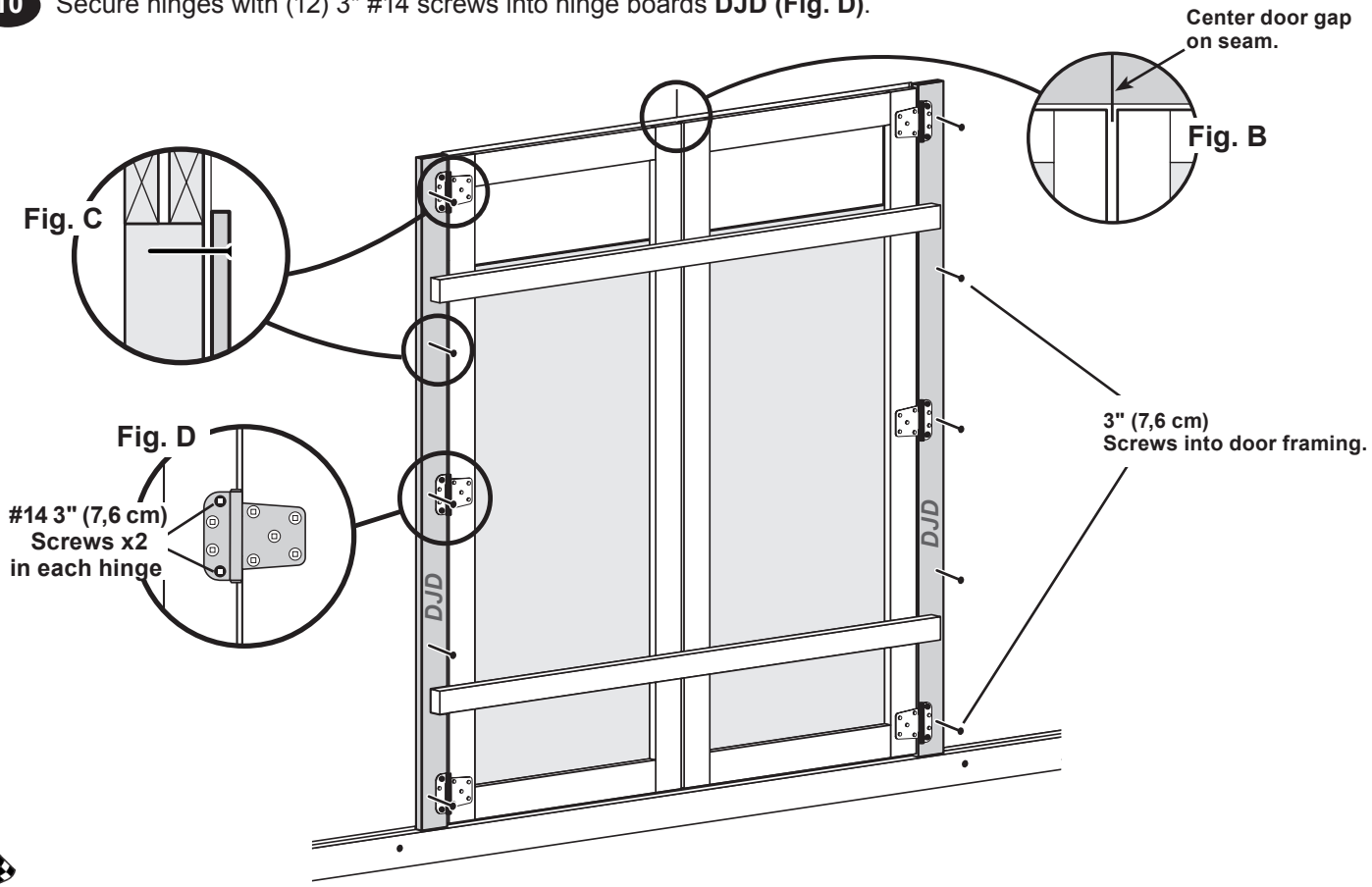

FINISH

Your doors are now installed.
Remove temporary supports and ensure that the doors open properly.

DOOR TRIM

PARTS REQUIRED:

x4 EFF
5/4 x 3-1/2 x 24-5/8" (3,2 x 8,9 x 62,5 cm)

x1 FPA
5/4 x 3-1/2 x 74" (3,2 x 8,9 x 188 cm)

3/4" (1,9 cm) x11
Bagged seperately / special coating

x1
64" Metal Threshold

x5
2" (5,1 cm)

x52
3/4" (1,9 cm)



BEGIN

1. Secure door trim from inside using 3/4" screws **(Fig. A)**.
2. Secure two horizontal door rails **EFF** with (4) 3/4" screws from behind to center of doors.
3. Reinforce the door trim with 3/4" screws through door panel into trim **(Fig. A)**. Locate screws as shown **(Fig. B)**.
4. Center trim **FPA** over doors and secure using (5) 2" finish nails into wall framing.

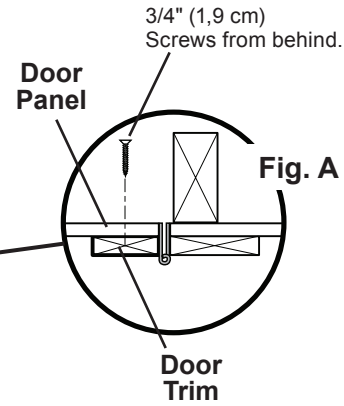

Fig. A

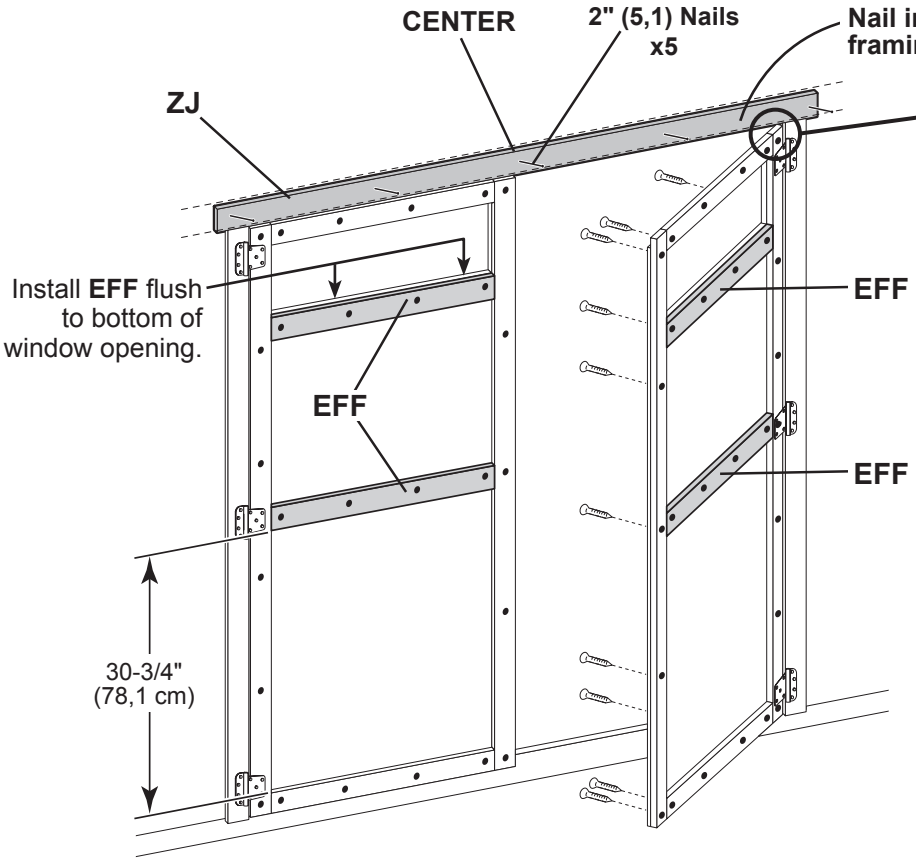

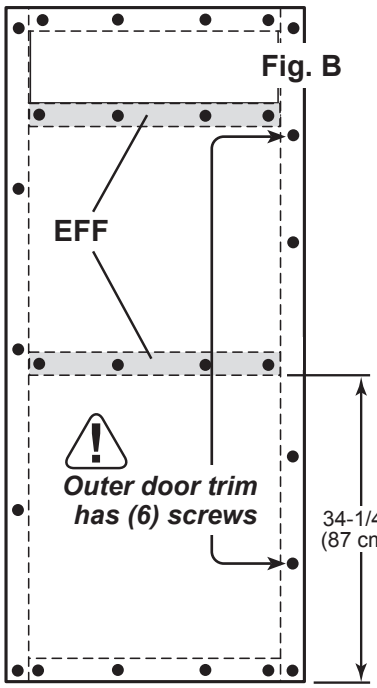

Fig. B

5. Center metal threshold between doors. secure using (11) 3/4" special coating screws (**Fig, C**).

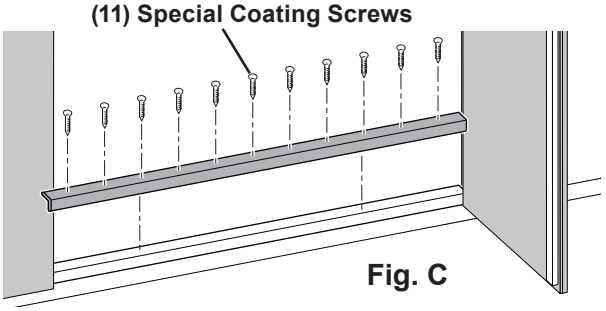

Fig. C

FINISH

Your doors and trim are now secured.

DOOR TRANSOM WINDOWS

PARTS REQUIRED:

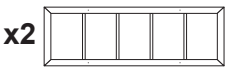



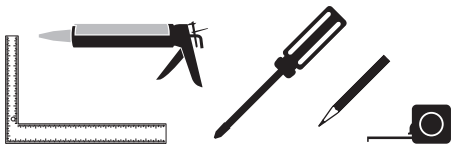

BEGIN

1 Apply high quality exterior-grade caulk behind frame near edge before installing to seal window.

You must caulk completely around window frame and all exposed door panel edges and trim to validate your warranty.
Use a paintable exterior rated caulk.

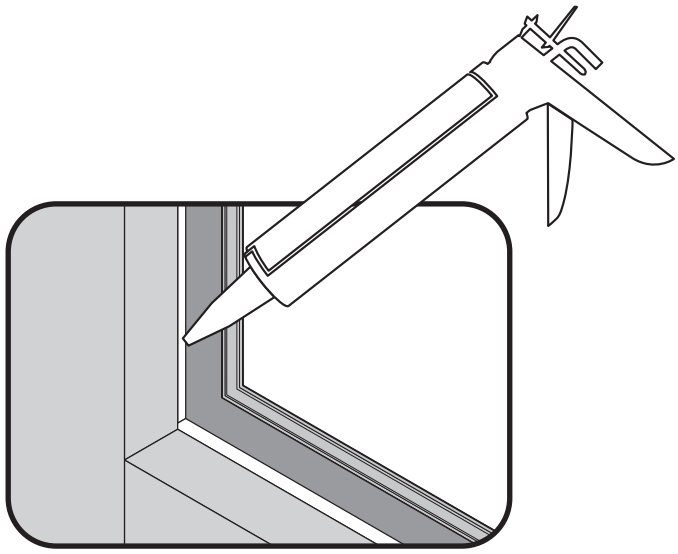

FRONT SIDE VIEW

2 From back side of door, measure 15-13/16" from inside edge of door.
Mark center of window opening on door.

Position window in opening flush to bottom of window opening. Center window on mark.

Secure with (4) screws to secure each window.

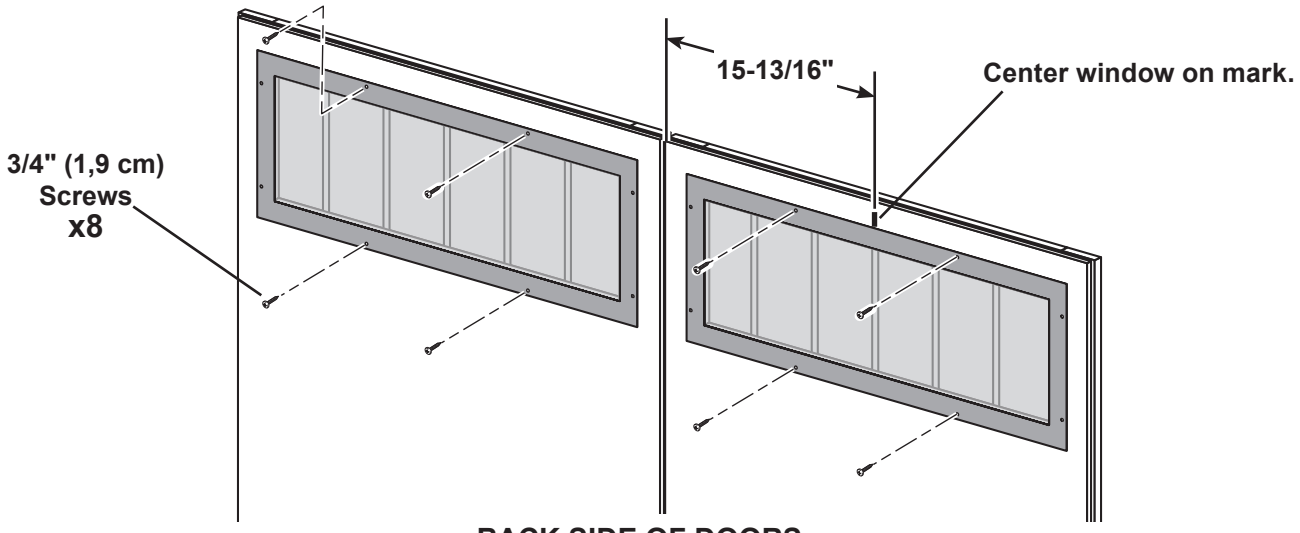

BACK SIDE OF DOORS

FINISH

Your transom windows are installed.

DOOR STIFFENERS

PARTS REQUIRED:

x14 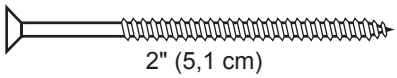
2" (5,1 cm)

x2 OO
69" Door Stiffener (175,3 cm)

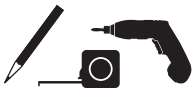

BEGIN

1. Center **OO** vertically on the left door in the door opening flush with the edge of door **(Fig. A**).

2. Secure with (7) 2" screws through outside trim into **OO (Fig. B)**

Repeat steps to install OO on right door.

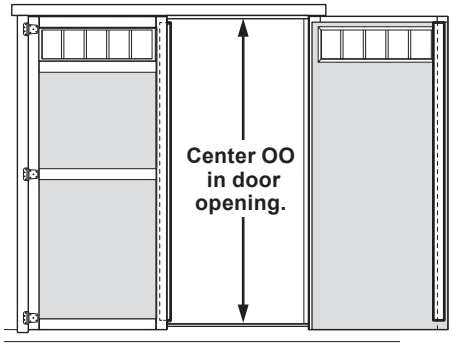

Fig. A

IT IS IMPORTANT TO HOLD THESE DIMENSIONS

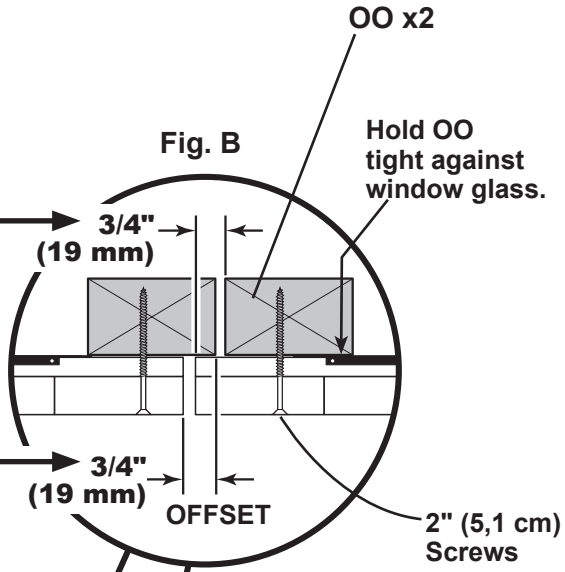

Fig. B

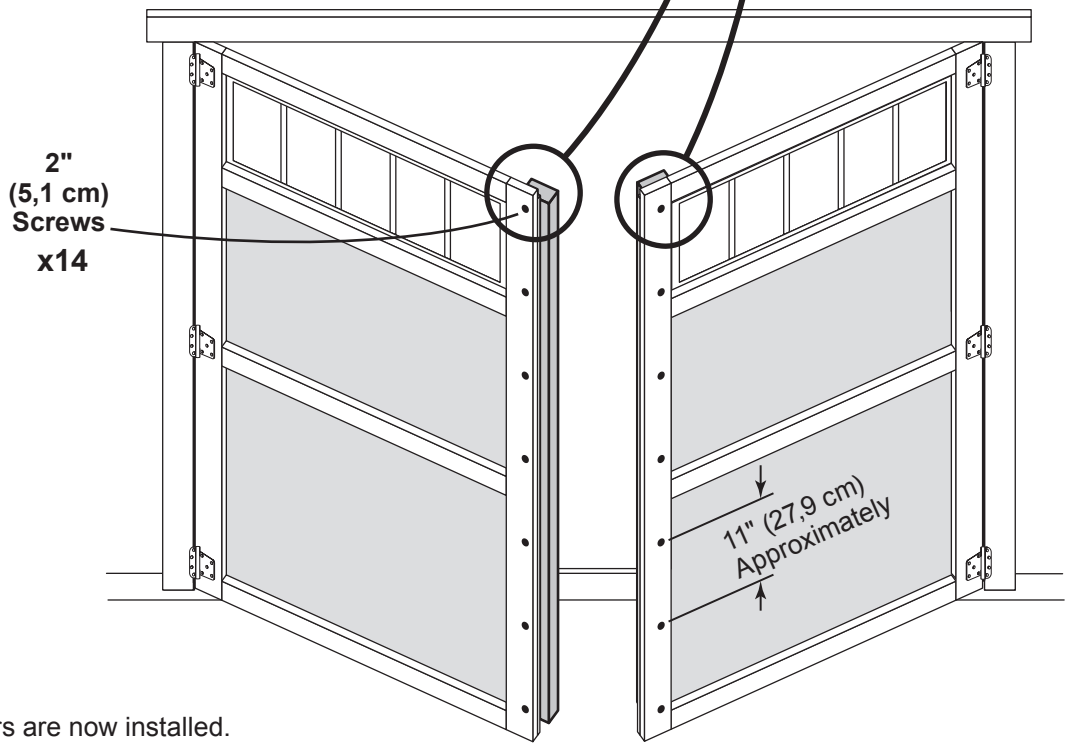

FINISH

Your door stiffeners are now installed.

DOUBLE DOOR HARDWARE

PARTS REQUIRED: x2 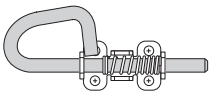 x8  3/4" (1,9 cm)  5/16" BIT (8 mm)  

BEGIN

1 Place upper bolt on **OO** in open position with bolt end 3/8" (9,5 mm) down from frame. Bolt is open when loop is contacting base **(Fig A)**.

2 Mark and pre-drill holes for screws. Install bolt with screws supplied.

Drill 5/16" (8 mm) hole deep enough for bolt to slide into.

3 Place lower bolt on **OO** in open position with bolt end 1/2" (12,7 mm) up from floor. Bolt is open when loop is connecting base **(Fig. B)**.

4 Mark and pre-drill holes for screws. Install bolt with screws supplied.

Drill 5/16" (8 mm) hole deep enough for bolt to slide into.

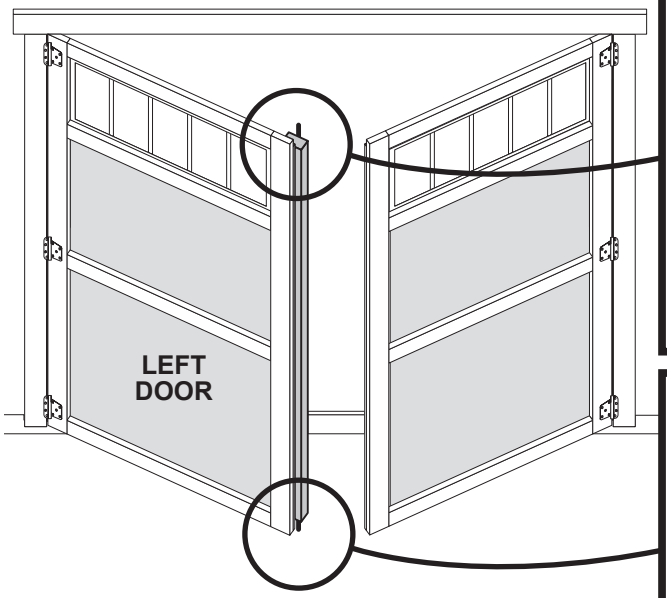

Fig. A

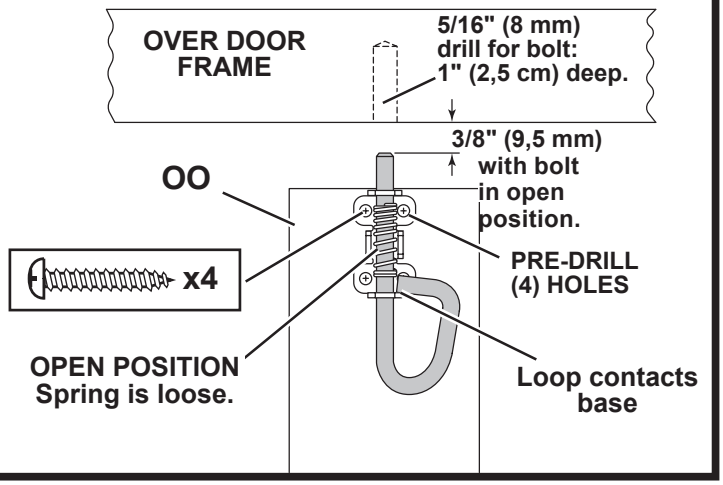

Fig. B

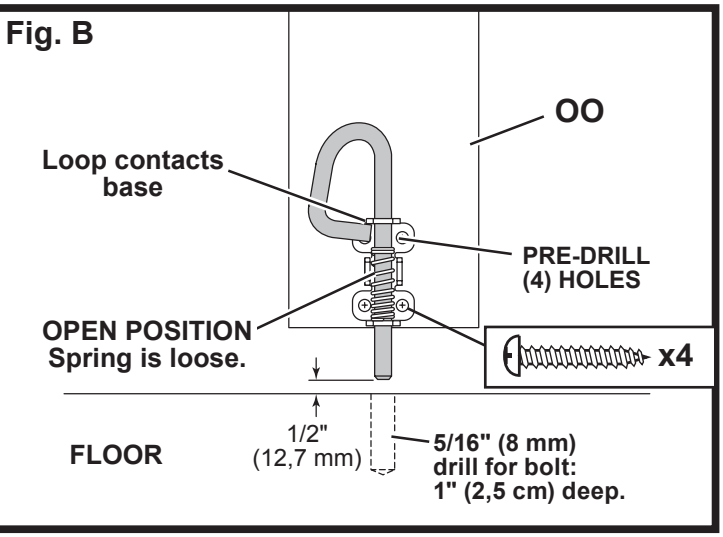

FINISH

Your spring bolts are now installed.

DOOR HARDWARE

PARTS REQUIRED:





✓BEGIN

1 Measure and mark the center hole location for the L-Handle shaft on the outside of the right door. From that mark, create additional marks 1-3/8” above and below the first hole mark.

On the center mark **only**, pre-drill a pilot hole using a 1/4” drill bit, then drill through with a 3/4” drill bit.

Pre-drill (2) 13/32" holes at your marked locations.

HOLE GUIDE

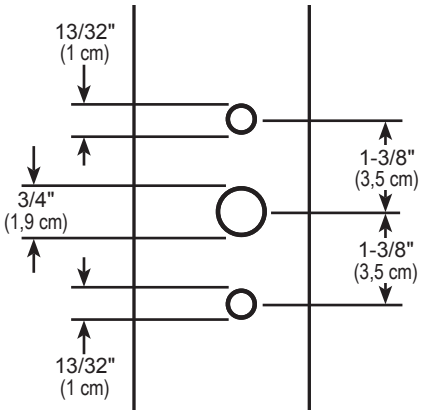

⚠

Keep drilled holes square to door to avoid breaking edge of door stiffener **(Fig. A)**.

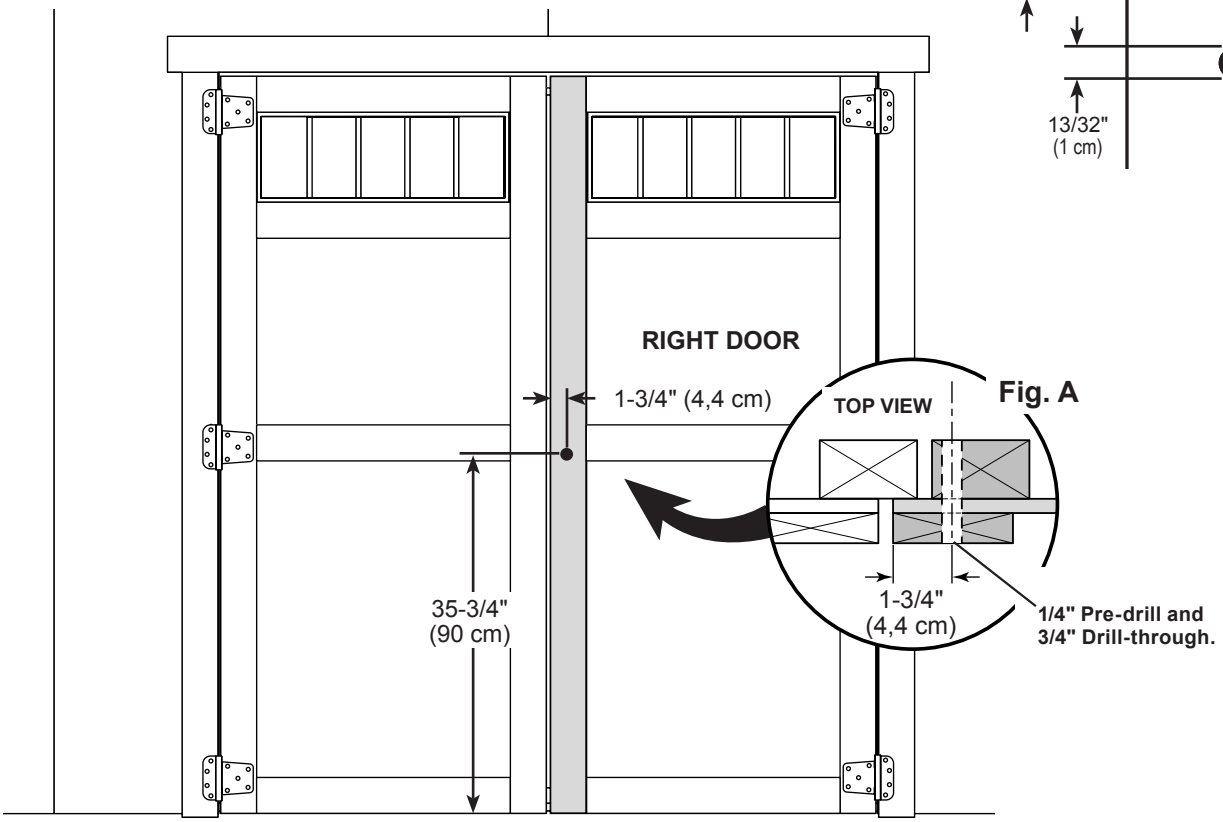

Fig. A

DOOR HARDWARE

PARTS REQUIRED:

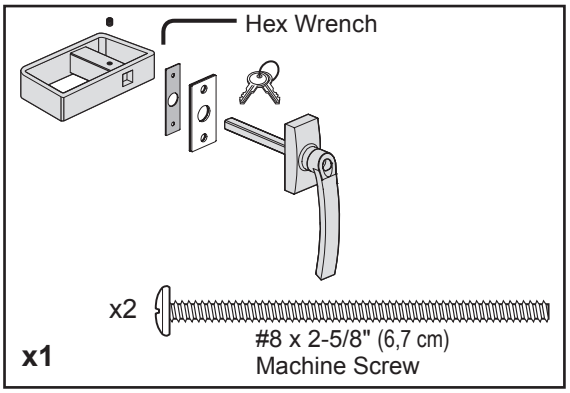

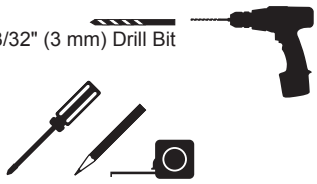

2 Pre-assemble and test-fit parts.

Place front gasket over shaft and insert shaft through hole.
Align inner plate with holes.
Secure plate to handle with (2) 2-5/8" machine screws *(supplied)*.

Slide D-handle over shaft until flush with inner plate.
Secure with set-screw.

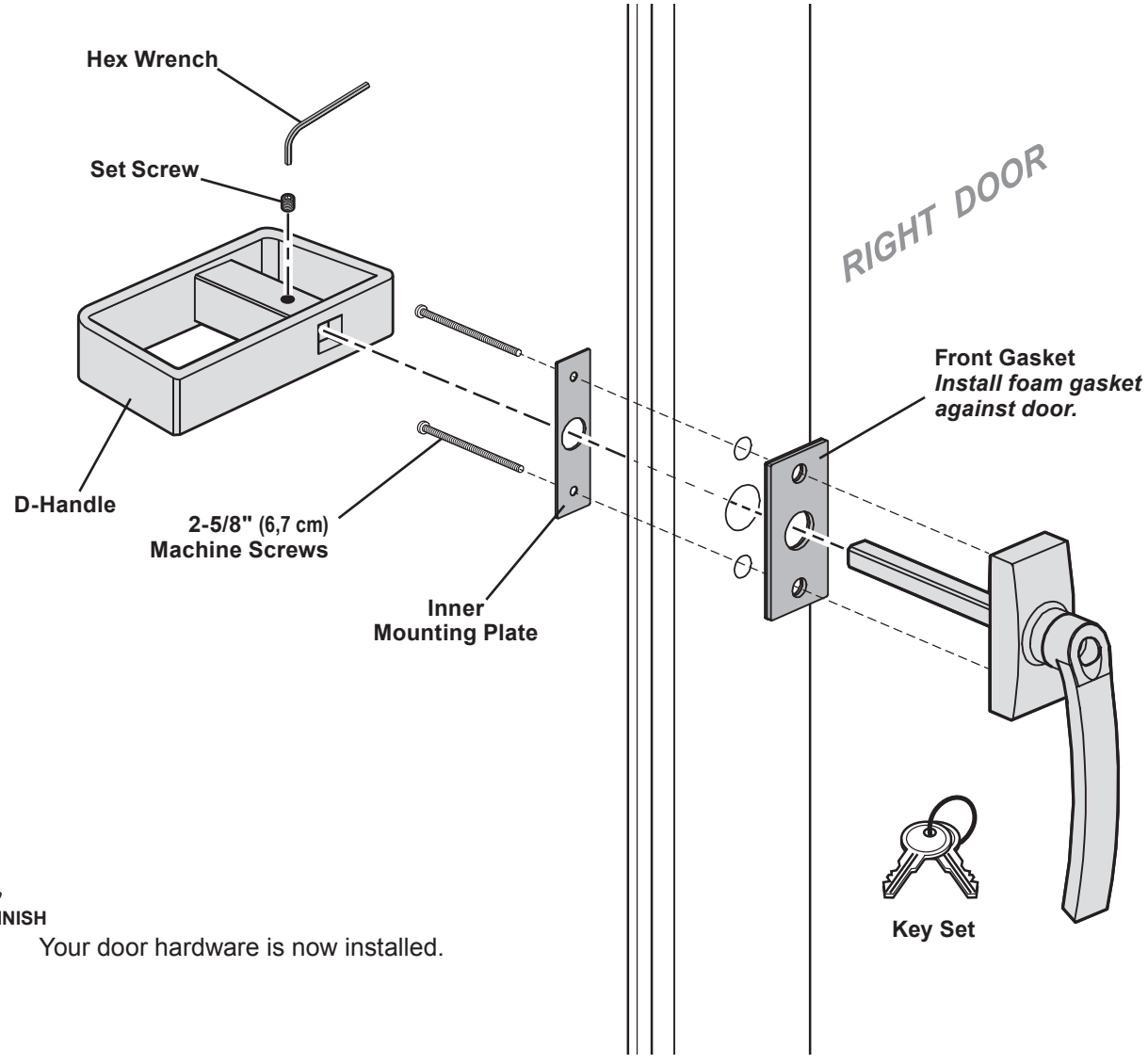

FINISH

Your door hardware is now installed.

DOOR WEATHERSTRIPPING

PARTS REQUIRED:

x2 **NUC**
1 x 4 x 69-1/4" (2,5 x 10,2 x 175,9 cm)

x20
2" (5,1 cm)

BEGIN

1 Install (2) **NUC** weatherstrips flush along inside of doors and flush to door header. Secure with 2” finishing nails, as shown **(Fig. A).**

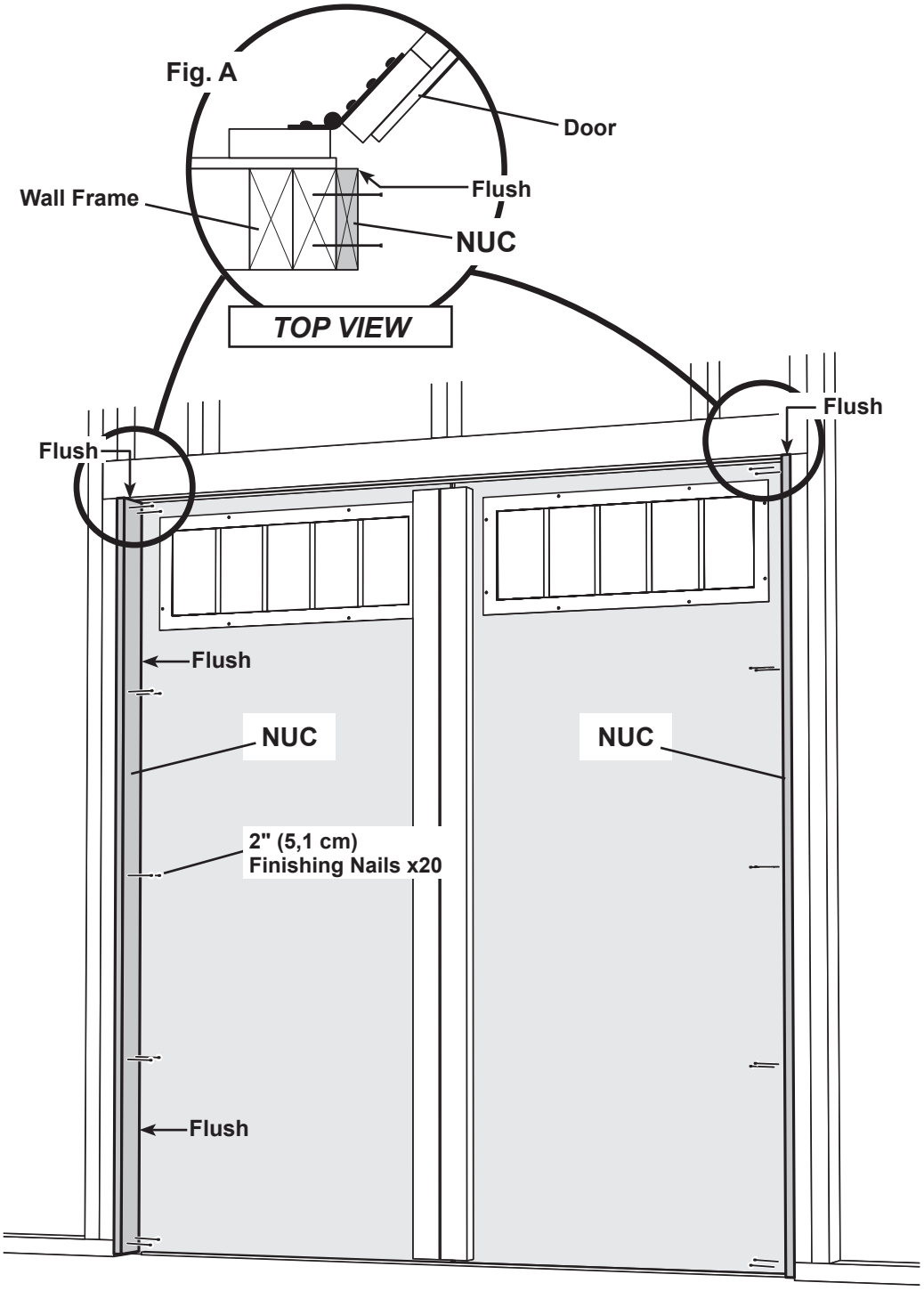

FINISH

Your double door weatherstripping is now installed.

CORNER TRIM

PARTS REQUIRED:

x8

3/8 x 3-1/2 x 83-1/2" (1 x 8,9 x 212,1 cm)



x64

2" (5,1 cm)

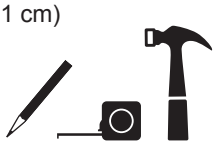

BEGIN

1 Install gable end **83-1/2"** corner trim flush to gable panel **(Fig. A)** and flush with eave wall panel **(Fig. B)**. Secure with 2" finishing nails spaced evenly.

2 Install eave side **83-1/2"** corner trim flush to eave soffit and flush along seam of installed corner trim **(Fig. C)**. Secure with 2" finishing nails spaced evenly.

Repeat steps to install trim to all four corners.

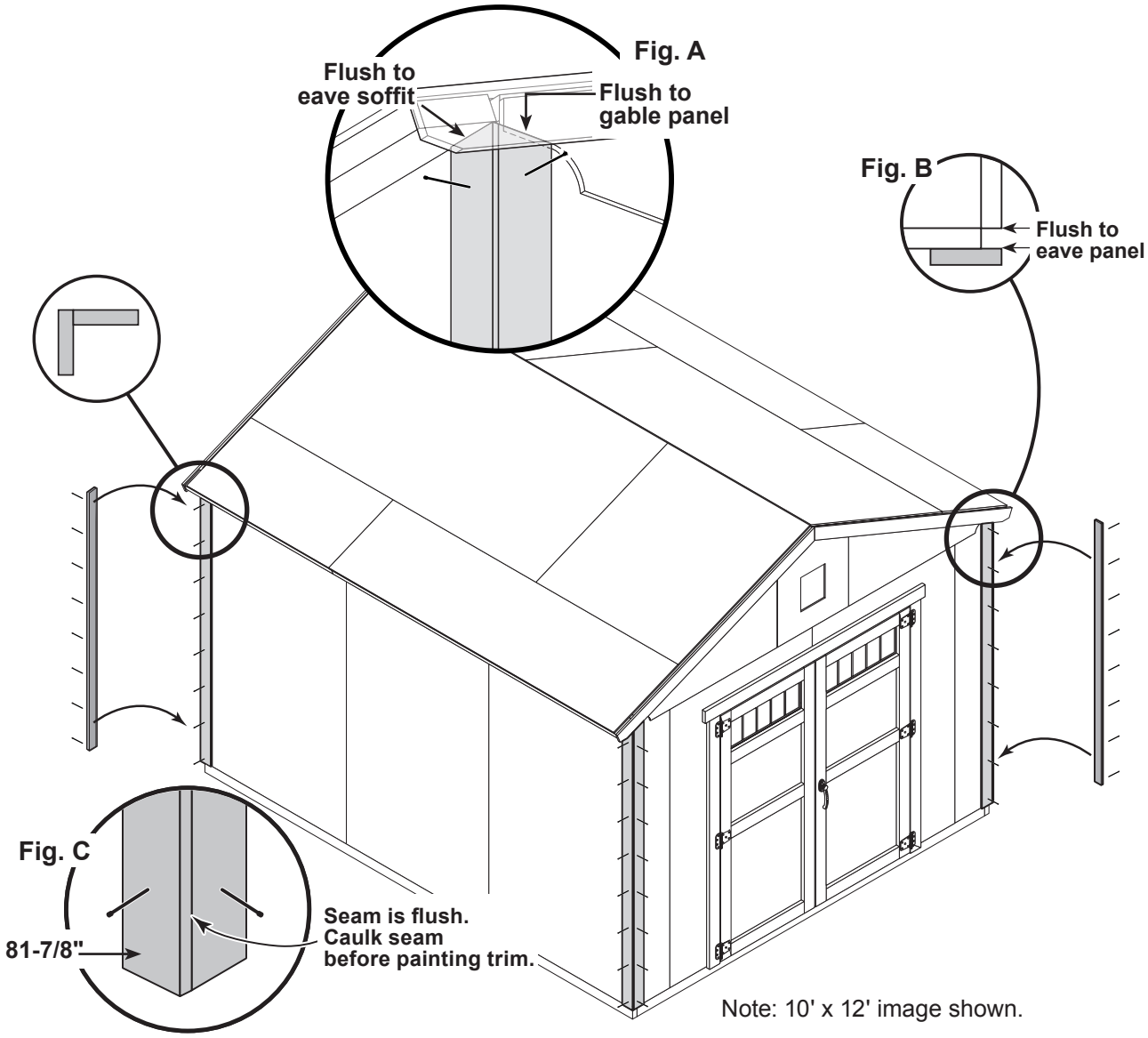

Note: 10' x 12' image shown.

FINISH

Your corner trim is now installed.

COLLAR TIE INSTALLATION

PARTS REQUIRED:

x3 **TM**
2 x 4 x 72" (2,5 x 7,6 x 183 cm)

x18
3" (7,6 cm)



BEGIN

1 Install (3) collar ties **TM** to the rafters with (3) 3" nails at each end **(Fig. A)**.

Install collar ties on the 2nd, 4th and 6th rafters from the door wall, as shown.

Ensure collar ties are level.

Fig. A

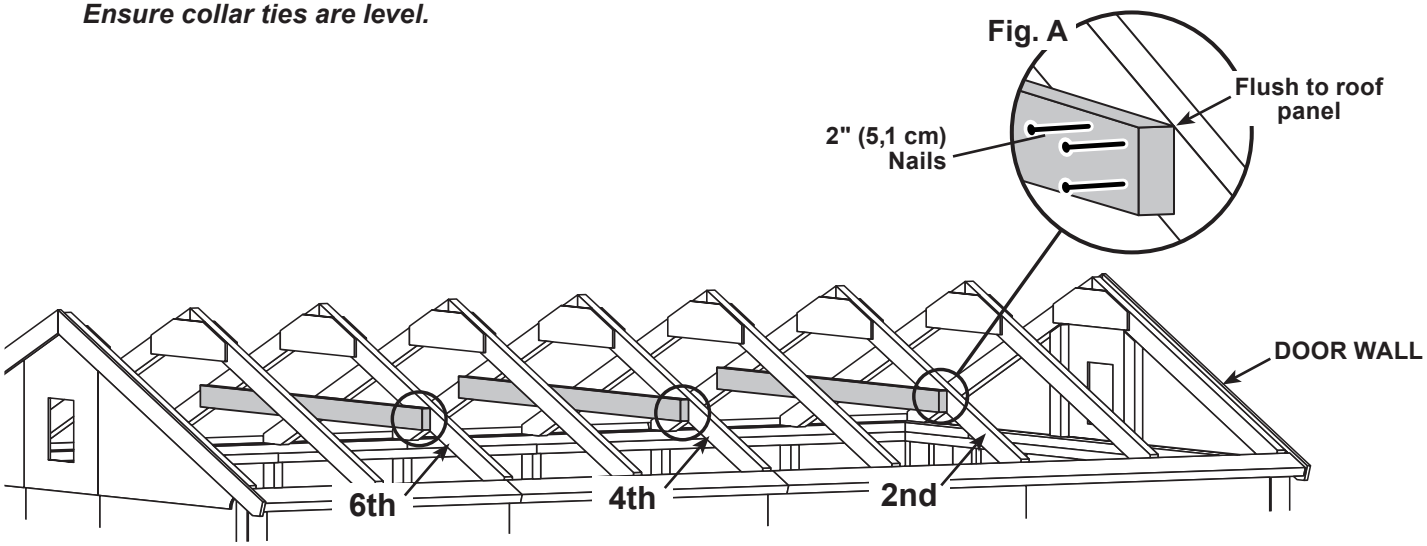

HINT:
For best appearance, install collar ties on side of rafter away from door.

FINISH

Your collar ties are now installed.

GABLE VENTS

PARTS REQUIRED:

x2 

x8 
#8 x 1" (2,5 cm)
Pan Head Screws





BEGIN

1 Locate vent in the gable wall, as shown.
Seal vent from behind with exterior grade caulk before installing.

Secure vent with 1" screws.

Repeat to install 2nd vent in the opposite gable.

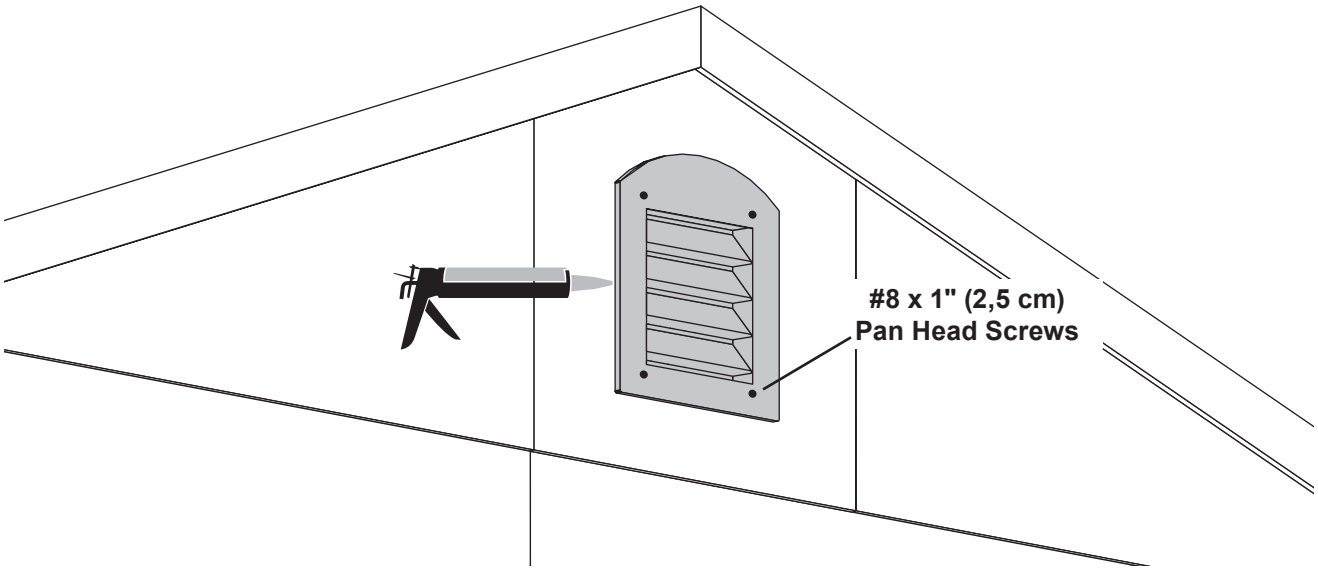

FINISH

Your vents are now installed.

HOOKS & EYES

PARTS REQUIRED:

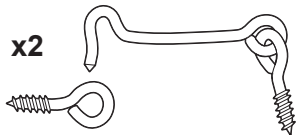

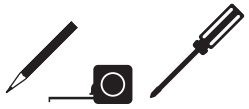

BEGIN

1 Install hooks in wall and into wall framing **(Fig.A)**.

2 Swing door open to locate eye.

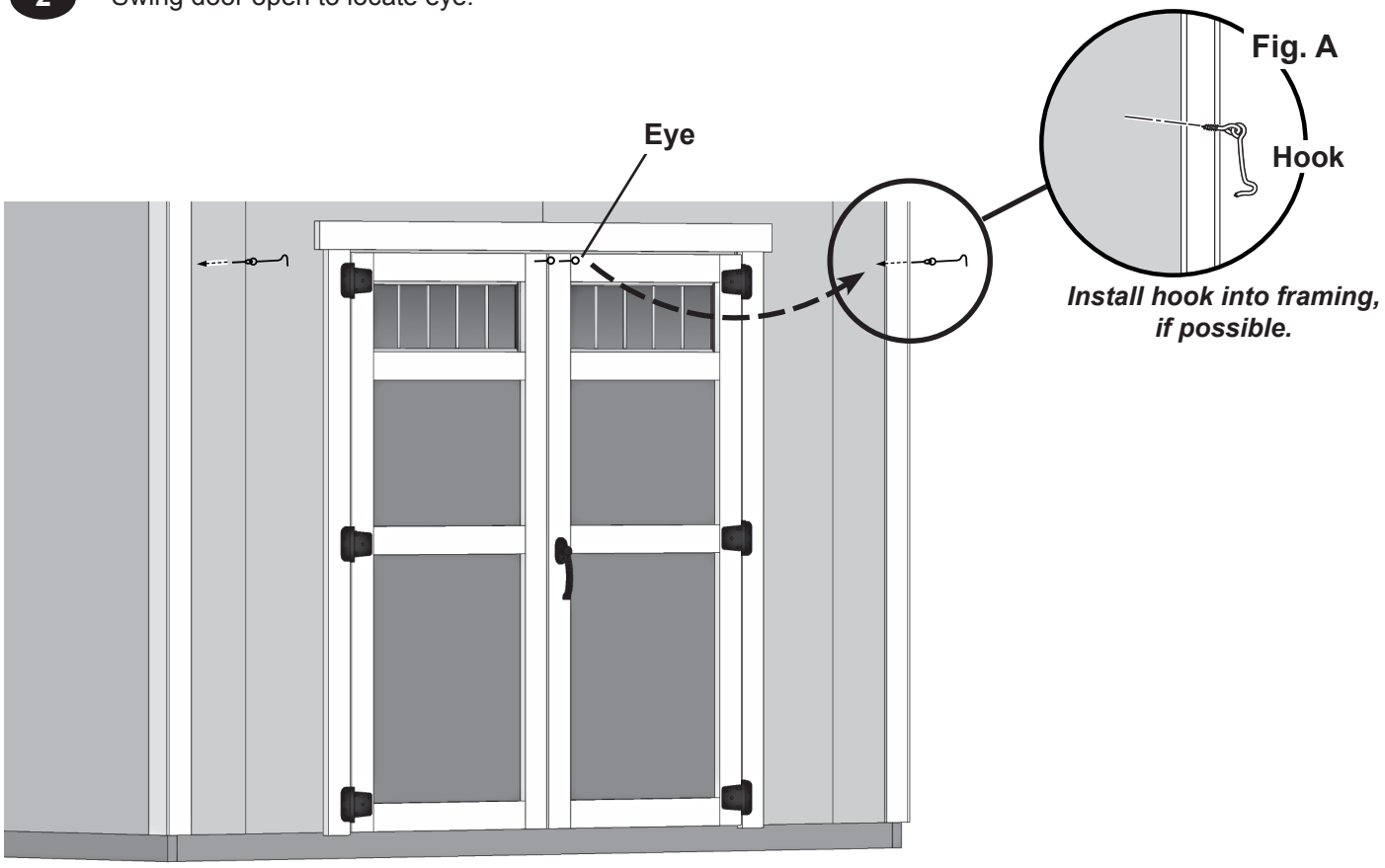

FINISH

You have installed your hooks & eyes.

PAINT & CAULK
- NOT INCLUDED -



• Use acrylic latex caulk that is paintable. Caulk at all horizontal and vertical seams, between the trim and walls, and all around the door trim.

• Use a high quality exterior acrylic latex paint. When painting your building, there are a few key areas that can be easily overlooked that must be painted:
  • Bottom edge of all siding and trim
  • Inside of doors and all 4 edges

Note:
Prime all un-primed exterior wood before painting.
(Follow directions provided by manufacturer.)

ROOF FELT
- NOT INCLUDED -

• Install felt flush to all roof edges overlapping 3". Use minimal amount of roofing nails to hold in place.

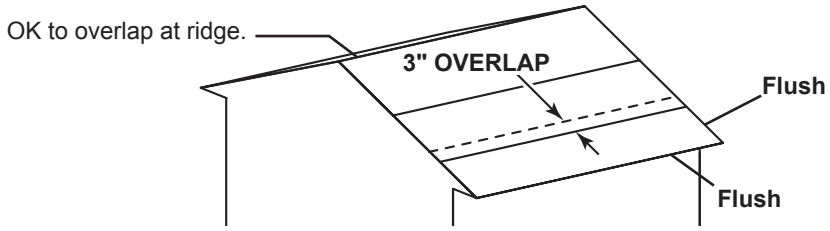

DRIP EDGE
- NOT INCLUDED -



• Install drip edge over roof felt on gable side and under roof felt on eave side **(Fig. A)**.
• Do not use nails on side of drip edge that hangs over side of building.
• Only nail top of drip edge as shown.

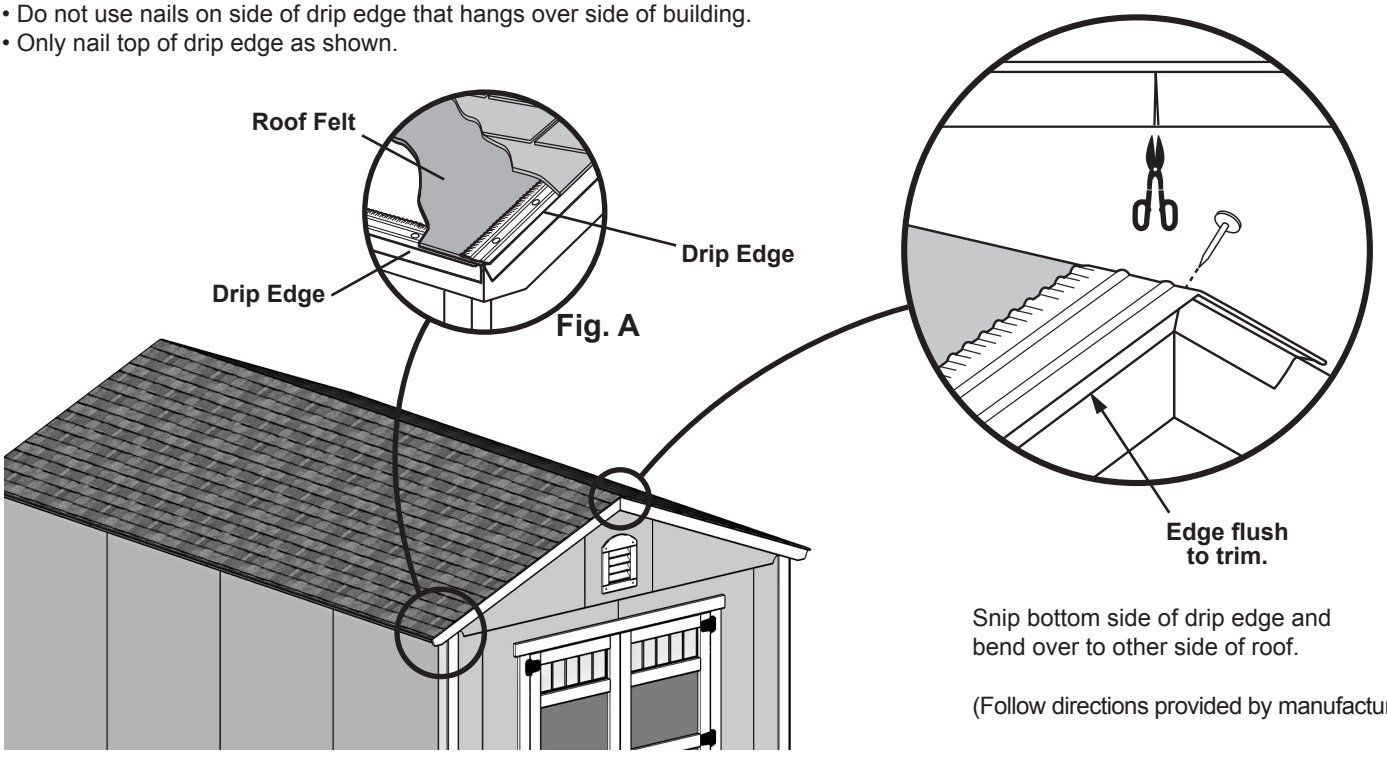

Snip bottom side of drip edge and bend over to other side of roof.

(Follow directions provided by manufacturer.)

SHINGLES
- NOT INCLUDED -

• Follow directions provided by manufacturer and these instructions.

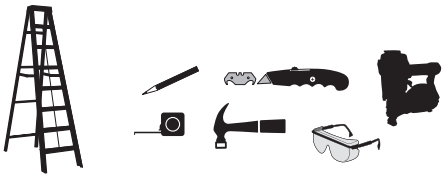

⚠ Familiarize yourself with a 3-Tab Shingle.

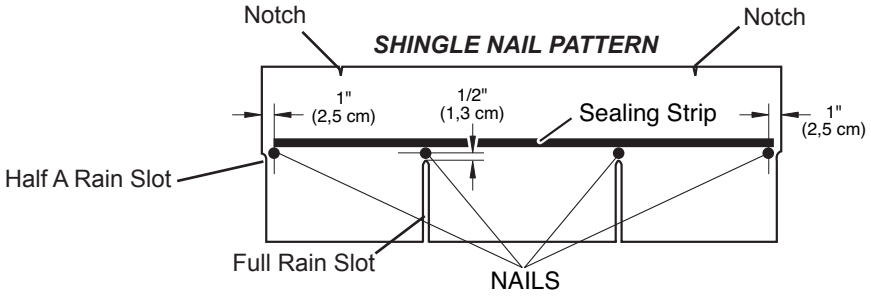

⚠ NEVER DRIVE FASTENERS INTO OR ABOVE SEALING STRIPS.

✓BEGIN

1 Install first starter row upside down and color up with a 1" overhang at back and bottom of roof panel. Use (4) nails per shingle.
Starter row must be straight and level all the way across with lower edge of roof deck.
NOTE: If you have installed drip edge install shingles flush to drip edge.

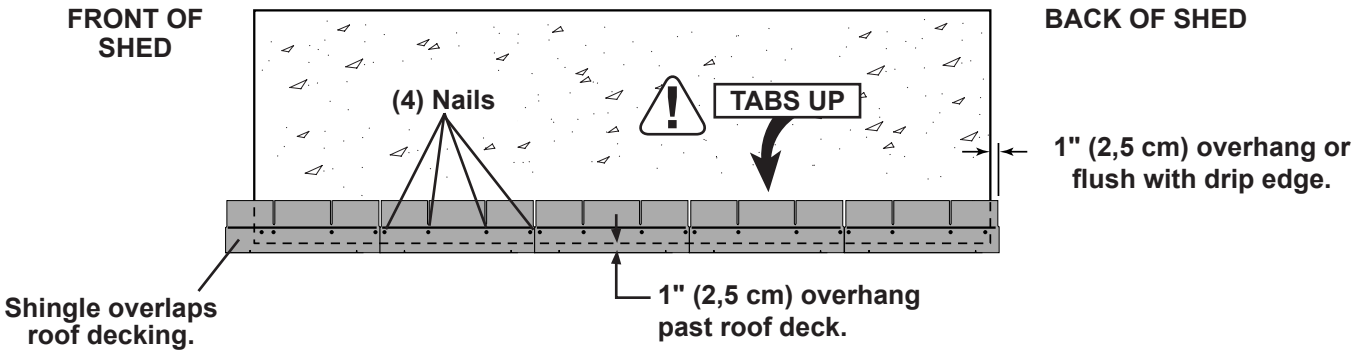

SHINGLES
continued...

2 Beginning at front of shed, install first row of shingles with notch at 1" past roof edge or flush with drip edge.

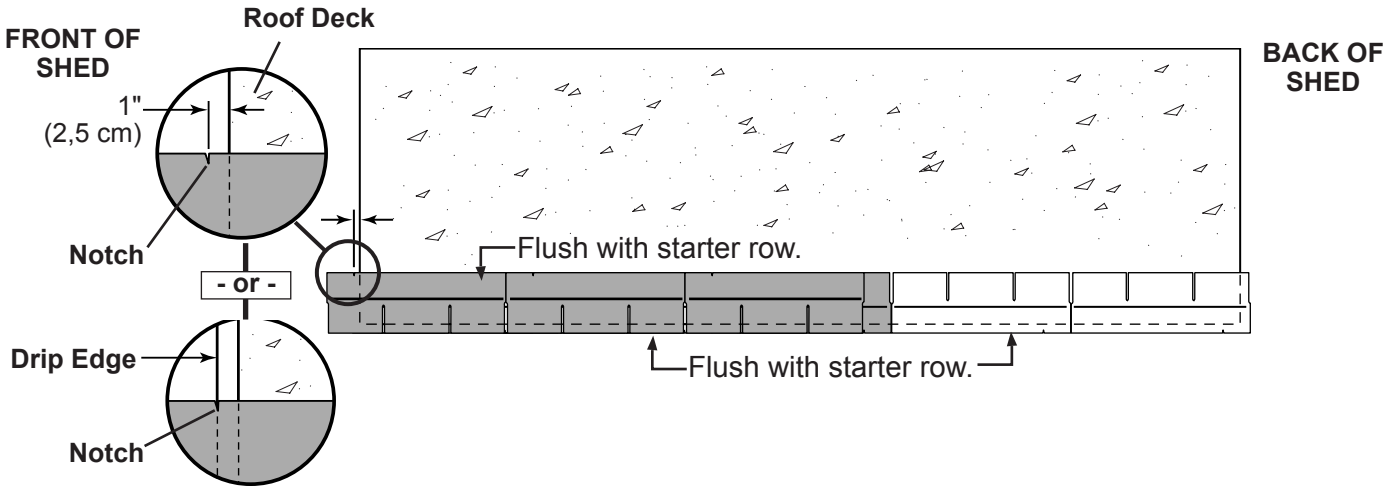

3 Install second row of shingles flush at top of first row's rain slots. Ensure 1" overhang or flush to drip edge at front, stagger each row.

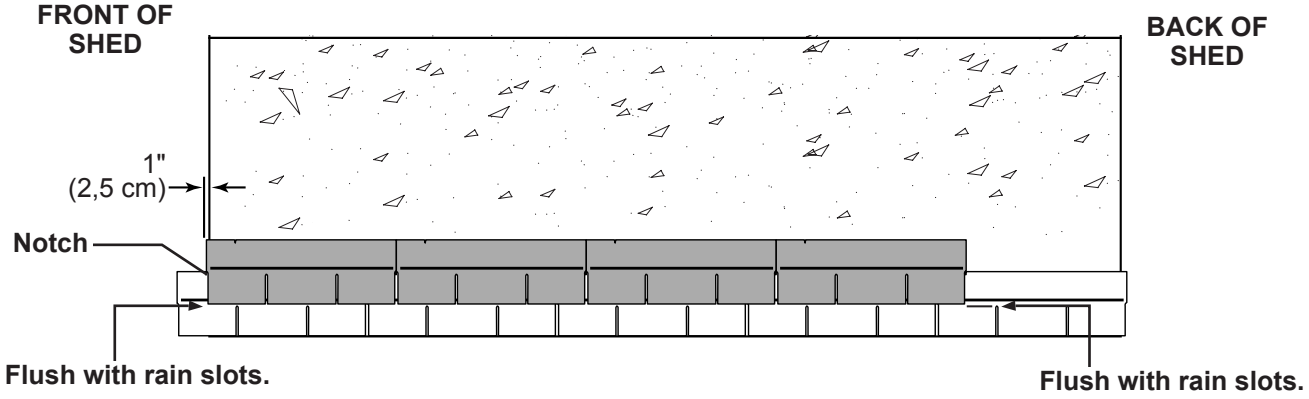

4 Continue installing rows of shingles by staggering at front.

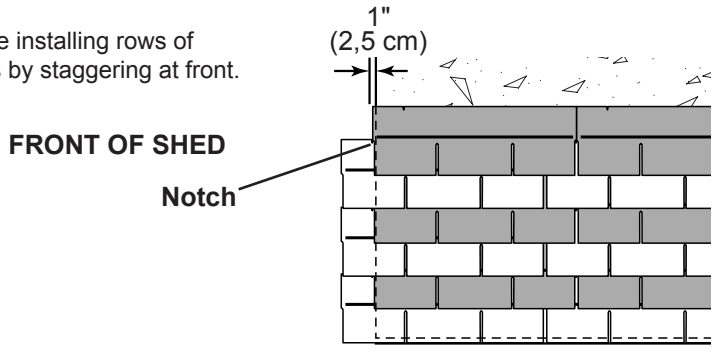

SHINGLES
continued...

5 *Continue installing rows of shingles to the peak. At the peak make sure there is a maximum of 5" or less to the rain slot, as shown below. If shingles overlap at ridge cut to peak with a utility knife.*

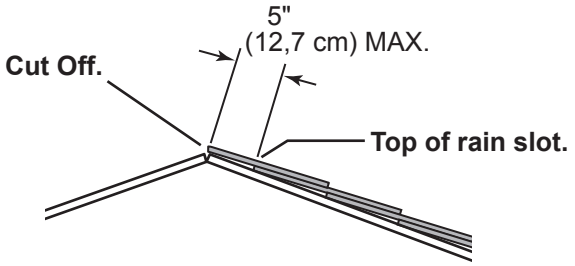

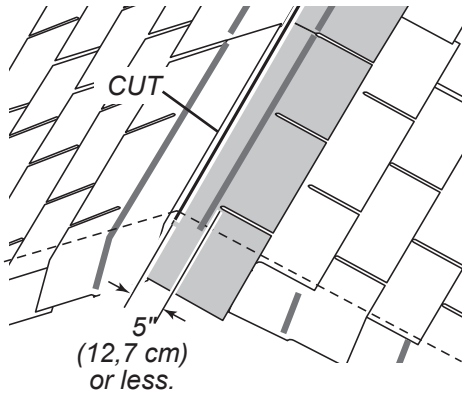

⚠ **• If more than 5" to rain slot you must install another row of shingles.**

6 *Repeat steps 1 - 5 to shingle the opposite side of your roof. Trim shingles at ridge.*

7 *Once both sides are shingled you need to trim ends. Strike a chalk line 1" from edge.*

8 Using your shingle hooked blade carefully cut shingles along chalk line.

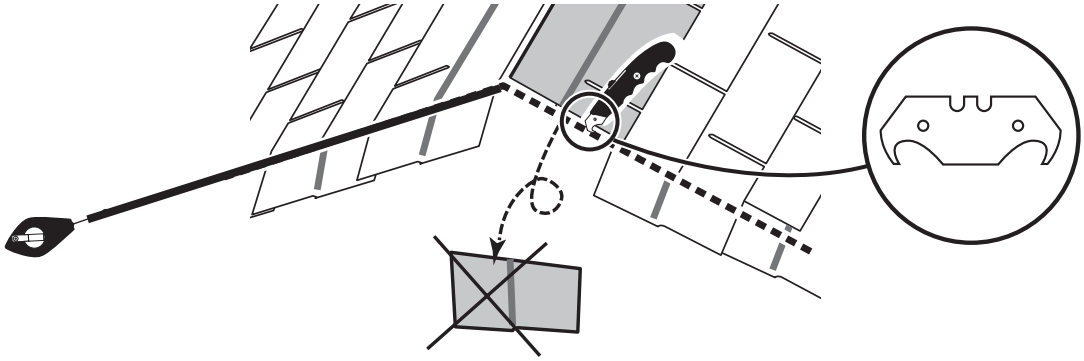

FINISH

You have finished shingling your roof. Proceed to capping the ridge.

SHINGLES - RIDGE CAP

• You will finish off the top of the roof with a ridge cap made from shingles.

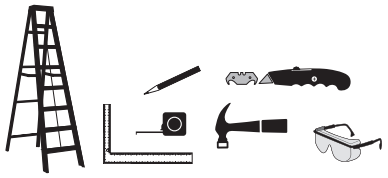

BEGIN

1 Cut shingles into THREE pieces. **Hint:** Use cut-off pieces first.

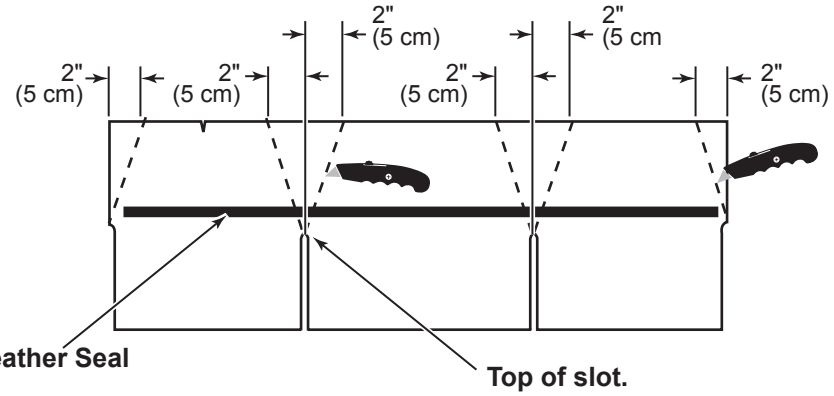

Score shingle, then snap-off angled cut.

Note: • You will need about 30 - 32 cut pieces.

42 to 44 Pieces

2 Install first ridge cap flush to shingles at front, as shown.

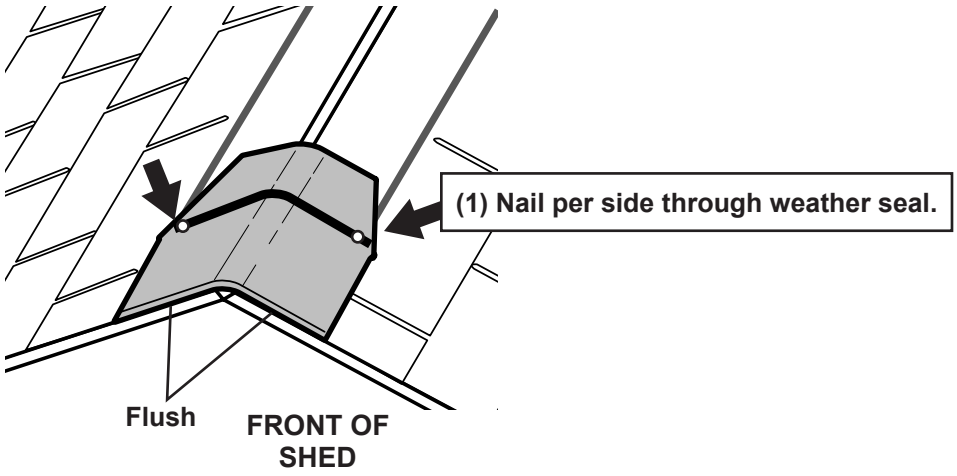

3 Install second ridge cap 5" back, as shown.

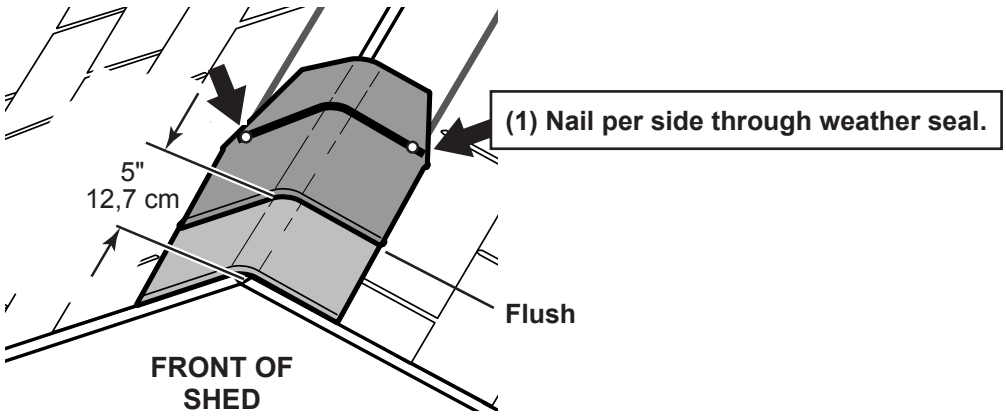

SHINGLES - RIDGE CAP
continued...

4 Continue installing ridge cap to back of roof.

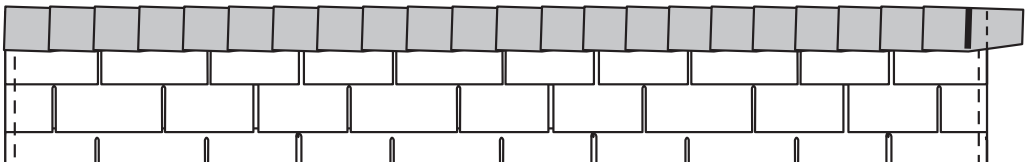

5 Make sure there is 4" between the shingle-color and edge of shingles.

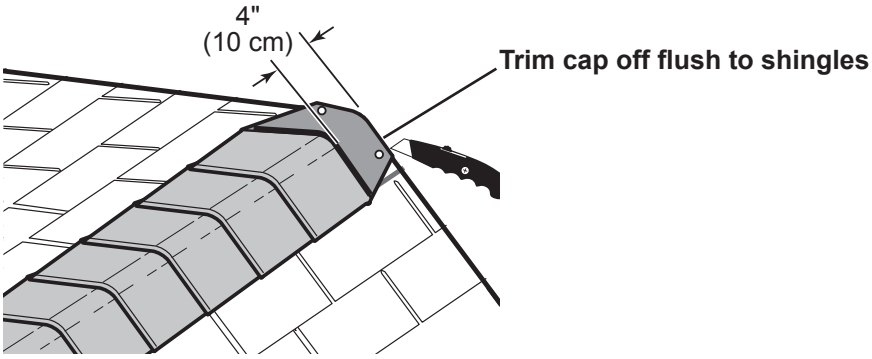

6 When you have 4" minimum of shingle color cut one piece to cap your roof.

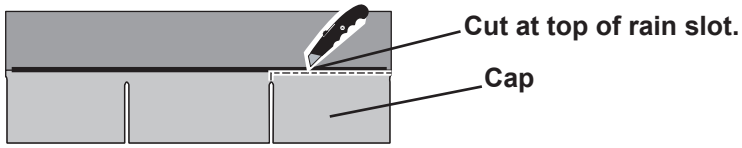

7 Install flush to shingles.

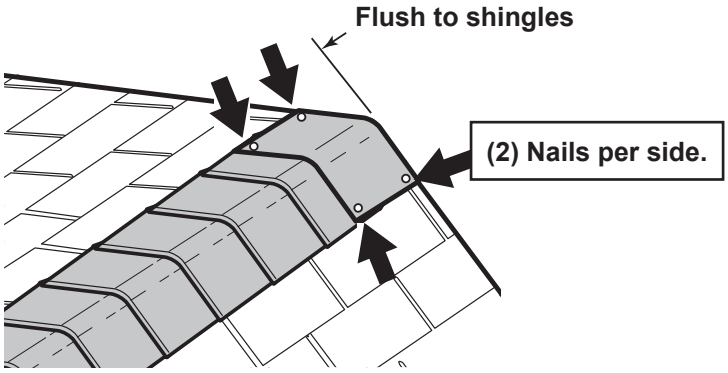

FINISH

You have finished your ridge cap.

16946-E 10' x16' Order Form

CATEGORY	PART DESCRIPTION	PART SIZE	PART ITEM #	BUILDING QTY.	PART ID
2 X 4	Collar Ties / Side Wall Top Plate	*LUM SPF 2X4X72 #2&BTR	O 72000000000	7	TM
	Side Wall Btm "A" / Dblr "A"	LUM SPF 2X4X96 #2&BTR	12306	4	TP
	Back Wall T & B Plate "A" / Dblr "A"	2 X 4 X 92 1/2"	O 92080000000	4	TJ
	Side Wall Doubler "B"	2 X 4 X 44 1/2" PLATE	O 44080000000	2	STL
	Side Wall Plate	2X4X48" DOUBLER/ PLATE/ CRATE	O 48000000000	8	SP
	Back Wall Top & Btm "B"	2 X 4 X 20 1/2" DOUBLER	O 20080000000	2	RP
	Doubler "D"	2 X 4 X 24" DOUBLER / PLATE	O 24000000000	2	RL
	Front Wall Plate "A"	2 X 4 X 80-1/2" STUD	O 80080000000	2	CGA
	Front Wall Plate "B"	2 X 4 X 32 1/2" PLATE	O 32080000000	2	QS
	Wall Studs	2 X 4 X 78 1/2"	O 78080000000	32	AI
	Jack Studs	2 X 4 X 68" STUD	O 68000000000	2	UM
	Over Door Crippler	2 X 4 X 7"	O 07000000000	5	AL
	Header	2 X 4 X 67"	O 67000000000	2	AM
	Rafter	2 X 4 X 65" 22.5* RAFTER	O 65002222000	18	AD
	Front / Rear Gable Connector	2 X 4 X 18 1/8"-22.5* CONNECT	O 18022222000	4	AF
2 X 6	Overhang "A"	LUM WSPF 2X6X96 #1 PREMIUM PET	12416	2	VX
	Overhang "B"	2 X 6 X 49 3/4" OVERHANG	N 49120000000	2	WTC
	Overhang "C"	2 X 6 X 48"	N 48000000000	2	VF
1 X 3 PINE	Gauge Block	1 X 3 X 5" PINE FILLER	U 05000000000	1	GAA
1 X 4 PINE	Weatherstrip	1 X 4 X 69-1/4"	T 69040000000	2	NUC
7/16 OSB	Upper Roof Panel "A"	OSB 7/16" x 4' x 8'	11110	2	---
	Upper Roof Panel "B"	7/16" OSB 47 7/8" X 48" ROOF	C 48004714000	4	---
	Lower Roof Panel "A"	7/16" OSB 23 1/2" X 96" ROOF P	C 96002308000	2	---
	Lower Roof Panel "B"	7/16" OSB 23 1/2" X 48" FILLER	C 48002308000	4	---
	Door Header Filler	7/16" OSB 3 1/4" X 66 3/4" HEADER	C 66120304000	1	---
GUSSETS	Gusset	EZ8"/OSB 6" X 24" GUSSET 22.5*	J 24000600225	16	---
NO GROOVE SIDING	Center Gable Panel With HOLE	3/8" NG 23 7/8" X 23 9/16" X 2	K 2309231400V	2	---
	Front / Rear Gable Panel - Right	3/8" NG 23 9/16" X 48" RIGHT FRONT GABLE	K 48002309300	2	---
	Front / Rear Gable Panel - Left	3/8" NG 23 9/16" X 48" LEFT FRONT GABLE	K 48002309400	2	---
	Corner Trim	3/8" NG 3-1/2" X 83-1/2"	K 83080308000	8	---
	Rearwall Panel "A" / Side Panel	SIDING NGSE 3/8X4'X7'	11507	9	---
	Rear Panel "B"	NG 23 7/8" X 84" WALL PANEL	K 84002314000	3	---
	Frontwall Panel "A"	NG 11-7/8" X 84" WALL PANEL	K 84001114000	2	---
	Frontwall Panel Right	NG 48" x 84" RIGHT FRONTWALL	K 84004800101	1	---
	Frontwall Panel Left	NG 48" x 84" LEFT FRONTWALL	K 84004800201	1	---
19/32 X 4 SMART TRIM	Gable Trim Right	19/32 TST 3 1/2" X 71 15/16" 22.5* O/E RGT TRIM	UT71150308221	2	AUR
	Gable Trim Left	19/32 TST 3 1/2" X 71 15/16" 22.5* O/E LFT TRIM	UT71150308222	2	AUL
5/4 X 4 SMART TRIM	Drilled Hinge Board	5/4 TST 3 1/2" X 72-3/8" DRILLED	UU7206030800D	2	DJD
	Door Rails	5/4 TST 3 1/2" X 24-5/8"	UU2410308000	4	EFF
	Over Door Trim	5/4 TST 3 1/2" X 74"	UU7400308000	1	FPA
PURCHASED COMPONENTS	Door Stiffener	LSL 1-1/4 X 2-1/4 X 69 PET	12715	2	OO
	Arched Gable Vent	VENT 8X10, APL# CV12X18W-PE, A	15021	2	---
	Hinge Screw Addendum	H/K ADDENDUM - 1" SCREWS FOR FM HINGES	15142-ADD	1	---
	Transom Window for Door	WINDOW - 9 x 27	15674	2	---
	Premium L-Handle	HANDLE - L & D HANDLE BAG W/SCREWS	15434	1	---
	HD Face Mount Hingles	HINGE BAG OF (6) W/LAGS - FLUSH MOUNT, BLACK DELRIN BUSHING, BLACK LAGS	15142-B	1	---
	Hardware Kit	H/K CLASSIC SERIES GABLES	15781	1	---
	Hardware Kit	H/K CLASSIC/HHP 4' GABLE	15603	1	---
	Threshold	THRESHOLD 7/8" X 1-1/2" X 63-7/8	15420	1	---
PACKAGING	Instructions		16946-E	1	---
	30475-R				
Right Door Assembly	Door Panel	NG 31 1/4" X 71 3/8" DOOR PANEL w/ WINDOW	K 7106310400W	1	---
	Vertical Door Stile	5/4 TST 3 1/2" X 71-5/8"	UU7110308000	1	ATC
	Drilled Door Stile	5/4 TST 3 1/2" X 71-5/8" DRILLED	UU7110030800D	1	BBD
	Horizontal Door Rails	5/4 TST 3 1/2" X 24-5/8"	UU2410308000	2	EFF
	30475-L				
Left Door Assembly	Door Panel	NG 31 1/4" X 71 3/8" DOOR PANEL w/ WINDOW	K 7106310400W	1	---
	Vertical Door Stile	5/4 TST 3 1/2" X 71-5/8"	UU7110308000	1	ATC
	Drilled Door Stile	5/4 TST 3 1/2" X 71-5/8" DRILLED	UU7110030800D	1	BBD
	Horizontal Door Rails	5/4 TST 3 1/2" X 24-5/8"	UU2410308000	2	EFF

LIMITED CONDITIONAL WARRANTY*

Backyard Storage Solutions, LLC warrants the following:

1. Every product is warranted from defects in workmanship and manufacturing for 1 year.
2. All accessories, hardware and metal components are warranted for 2 years.
3. All Oriented Strand Board (OSB) is warranted for 2 years
4. Siding and Trim is warranted for 10 years.
5. Solar Shed windows are warranted for 1 year.
6. Cedar lumber is warranted for 15 years.
7. Preserved Pine is warranted for 10 years.
8. Redwood is warranted for 10 years.

Backyard Storage Solutions, LLC will repair, replace or pay for the affected part. In no event shall Backyard Storage Solutions, LLC pay the cost of labor or installation or any other costs related thereto. All warranties are from date of purchase. If a cash refund is paid on an affected part, it will be prorated from the date of purchase.

CONDITIONS

The warranty is effective only when:

1. The unit has been erected in accordance with the assembly instructions.
2. The unit has been properly shingled and painted or stained and reasonably and regularly maintained thereafter.
3. The failure occurs when the unit is owned by the original purchaser.
4. Backyard Storage Solutions, LLC has received the warranty registration card within thirty (30) days of purchase and notification of the failure in writing within the warranty period specified above.
5. Backyard Storage Solutions, LLC has had reasonable opportunity during the sixty (60) days following receipt of notification to inspect and verify the failure prior to commencement of any repair work.

REQUIREMENTS

Storage Buildings

To validate your warranty, it is necessary to properly maintain your Backyard Storage Solutions, LLC unit; shingle the roof and paint or solid-colored stain the siding using quality, 100% acrylic latex exterior product with a minimum of two (2) coats within thirty (30) days of assembly; caulk above all doors and all horizontal and vertical trim boards; paint and seal all exposed edges, sides and faces of siding/trim and OSB siding to include all exterior walls and all sides and all edges of doors.

Gazebos & Pergolas

To validate your warranty, it is necessary to properly maintain your Backyard Storage Solutions, LLC unit. This includes treating all of the exposed cedar and pine surfaces on your gazebo or pergola structure with an exterior grade wood preservative, an exterior oil-based semi-transparent stain, an acrylic latex exterior paint or an acrylic latex solid color exterior stain within 30 days of assembly and as needed thereafter to maintain your warranty.

Keep vegetation trimmed away from building and make sure siding panels and trim do not come in contact with masonry or cement. The minimum ground clearance for siding must be one half inch (½ inch) from concrete slab or two and one half inches (2 ½") from the ground when building is erected or constructed on a treated wood floor kit. Water from sprinklers must be kept off unit. In no event will Backyard Storage Solutions, LLC be responsible for any indirect, incidental, consequential or special damages nor for failure(s) that are caused by events, acts or omissions beyond our control including, but not limited to, misuse or improper assembly, improper maintenance (which eventually leads to rot or decay) and acts of God. Backyard Storage Solutions, LLC will not be held responsible for any labor costs incurred to construct your unit.

This warranty gives you certain specific rights that vary from state to state.

CLAIM PROCEDURE

To make a claim under this warranty, you can either call 1-888-827-9056 or email: customerservice@backyardproducts.com.

Please have ready the information below when you call or include the information in your email:

1. The model and size of the product.
2. A list of the part(s) for which the claim is made.
3. Proof of purchase of the Backyard Storage Solutions, LLC item, as shown on the original invoice or receipt.
4. Run code: found on exterior product label or assembly instructions enclosed in the product package.

All other inquiries can be mailed to:

Backyard Storage Solutions, LLC
Attn: Customer Service
1000 Ternes
Monroe, MI 48162

***WARRANTY TERMS MAY VARY OUTSIDE THE U.S.A.**

IMPORTANT: This is your warranty certificate.