16903-C

STOP

DO NOT RETURN TO THE STORE!

If you discover missing or damaged parts,
or if you have questions about the building process,
please reach out to us directly for the fastest service.

24/7 Support

help.backyardproducts.com

- Answers to frequently asked questions
- Technical assistance and how-to videos
- Submit a help request
- Request replacement parts

Business Hours

(734) 242-6900

Monday - Friday ..... 8:00am - 6:00pm EST
Saturday - Sunday .....Closed



Did you enjoy building your shed?

JOIN OUR TEAM

AND MAKE UP TO $1,500/WEEK*

Call a Recruiter Today! 734-365-7000



Flexible schedule



No selling,
just building



Bonus incentives
available



*based on number of completed installations

(This page intentionally left blank.)

Backyard PRODUCTS

16903-C | 09/29/2025

ASSEMBLY MANUAL

MODERN 8' x 6' (243,8 x 182,9 cm)

ACTUAL FLOOR SIZE IS 96" x 72" (243,8 x 182,9 cm)

KEEP THIS MANUAL FOR FUTURE REFERENCE

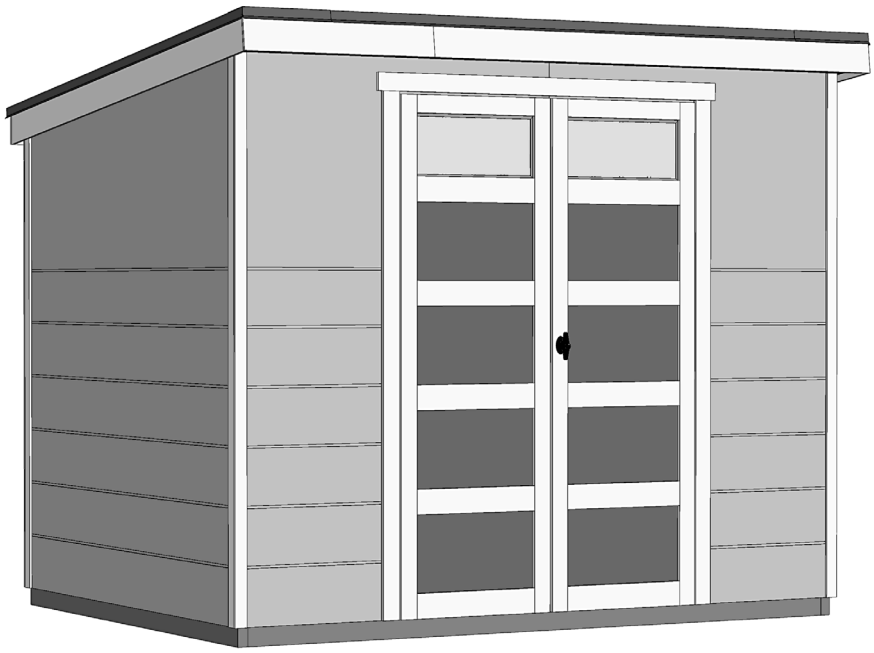

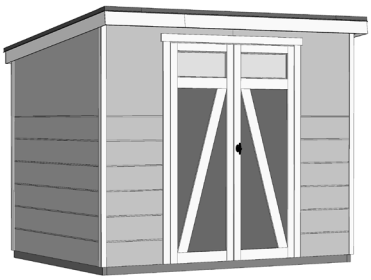

Three options for door trim.

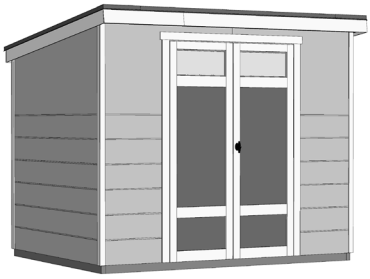

⚠ IMPORTANT! ⚠

READ INSTRUCTIONS THOROUGHLY PRIOR TO BEGINNING ASSEMBLY.

BEFORE YOU BEGIN

- **BUILDING RESTRICTIONS AND APPROVALS**

  Be sure to check local building department and homeowners association for specific restrictions and/ or requirements before building.

- **ENGINEERED DRAWINGS**

  Contact our Customer Service Team if engineered drawings are needed to pull local permits.

- **SURFACE PREPARATION**

  To ensure proper assembly you must build your shed on a level surface.

  Recommended methods and materials to level your shed are listed on page 10.

- **CHECK ALL PARTS**

  Inventory all parts listed on pages 4-7.

- **ADDITIONAL MATERIALS**

  You will need additional materials to complete your shed. See page 3 for required and optional materials and quantities.

******CONTACT OUR CUSTOMER SERVICE TEAM IF ANY PARTS ARE MISSING OR DAMAGED******

- Order form and warranty at back of manual -

Call: 1-734-242-6900 email: customerservice@backyardproducts.com

TOOLS

Required

- ☐ Phillips Screwdriver
- ☐ Drill / Driver
  - ☐ 1/4" Drill Bit
  - ☐ 3/8" Drill Bit
  - ☐ 1/2" Drill Bit
  - ☐ #2 Philips Drive Bit
- ☐ Hammer
- ☐ Level
- ☐ Pencil
- ☐ Tape Measure
- ☐ Square or
- ☐ Utility Knife
  - ☐ Shingle Blades
- ☐ Caulk Gun
- ☐ Paint Tools
- ☐ Safety Glasses
- ☐ Ladder

Optional

- ☐ Tool Belt/ Nail Pouch
- ☐ Tin Snips (for drip edge)
- ☐ Pliers
- ☐ Chalk Line
- ☐ Nail Gun
  - • gun nails
- ☐ Gloves

Safety! Always use approved safety glasses during assembly.

HELPFUL REMINDER SYMBOLS

Look for these symbols for helpful reminders throughout this manual.

= Assistance Required; two or more people.

= Ensure squareness.

= Important required step or operation.

= Helpful assembly hint.

= Mark part with pencil.

BEGIN = Beginning of steps for assembly or installation.

FINISH = You have finished the assembly or installation.

= Level

ORIENT LUMBER AND TRIM FOR BEST APPEARANCE

Framing lumber is graded for structural strength and not appearance. Exterior trim is graded for one good side.

Always install the material leaving the best edge and best surface visible. Please remember that these blemishes in no way negatively affect the strength or integrity of our product. (See Fig. **A**, **B**, **C**.)

A

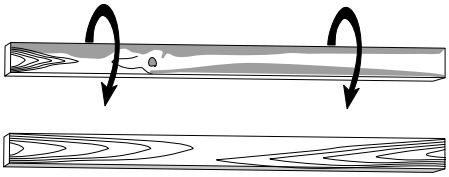

B

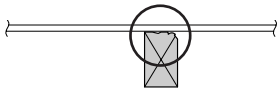

C

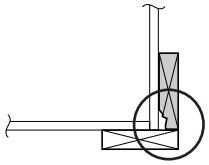

ADDITIONAL MATERIALS

FOUNDATION OR FLOOR MATERIALS

- A complete floor is supplied with this shed.
- See the FLOOR LEVELING section on page 10 for recommended methods and suggested materials to properly level your floor, as this will vary depending on your specific site.
- If you choose to install your floor on a concrete slab, refer to page 8.

REINFORCED WOOD FLOOR FRAME (OPTIONAL)

IMPORTANT! Depending on your specific use you may want to construct a heavy duty floor frame by adding additional floor joists (shown below as shaded). Below is a list of additional materials (not included):

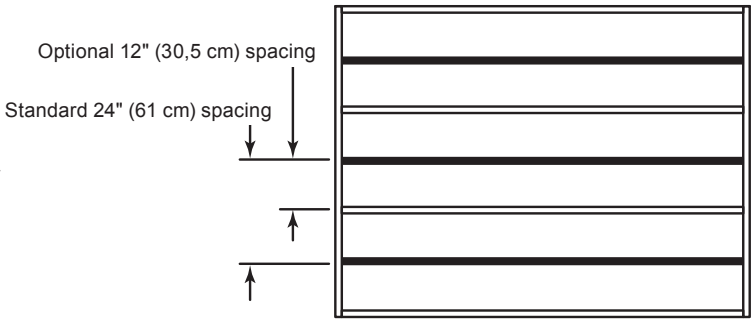

☐ **x3** 2 x 4 x 8' (5 x 10 x 243,8 cm) Treated Lumber
Cut to: 2 x 4 x 93" (5 x 10 x 236,2 cm)

COMPLETING YOUR SHED

You will need these additional materials:

☐ **PAINT FOR SIDING ..... 2 Gallons**
Use 100% acrylic latex exterior paint. (2) coats recommended.

☐ **PAINT FOR TRIM ..... 2 Quarts**
Use 100% acrylic latex exterior paint.

☐ **CAULK ..... 3 Tubes**
Use acrylic latex exterior caulk that is paintable.



FRAMING NAILS

Boxed Nails	*–Or–*	*Nail Gun Strip/Coil Nails*
☐ **x1 lbs.**		☐ **x75**
☐ **x3 lbs.**		☐ **x625**

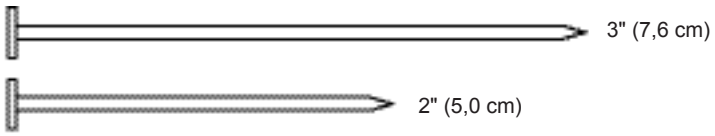

TO VALIDATE YOUR WARRANTY YOU MUST USE THE FOLLOWING:

☐ **CAULK ..... 1 Tube**
For windows and door track
Use acrylic latex exterior caulk that is paintable.

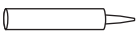

PARTS IDENTIFICATION AND SIZES

Part identification letters are stamped on some parts.

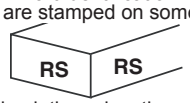

Check these locations for part stamp.

Treated lumber is stamped:

TREATED

WOOD SIZE CONVERSION CHART

Nominal Board Size	Actual Size
2 x 4	1-1/2" x 3-1/2" (3,8 x 8,9 cm)
1 x 4	3/4" x 3-1/2" (1,9 x 8,9 cm)
2 x 3	1-1/2" x 2-1/2" (3,8 x 6,3 cm)
1 x 3	3/4" x 2-1/2" (3,8 x 6,3 cm)

PARTS LIST

☑ **INVENTORY YOUR PARTS before you begin.**
We suggest sorting parts by the category they are listed in.

WALLS

- ☐ **x3** ☐ **FAB** 2 x 3 x 3-3/16" (5,1 x 7,6 x 8,1 cm)
- ☐ **x3** **AFD** 2 x 4 x 4-7/16" (5,1 x 10,2 x 11,3 cm)
- ☐ **x2** **WFS** 2 x 3 x 22-1/16" (5,1 x 7,6 x 56 cm)
- ☐ **x2** **TNB** 2 x 3 x 22-5/8" (5,1 x 7,6 x 22,9 cm)
- ☐ **x2** **LOA** 2 x 3 x 27-11/16" (5,1 x 7,6 x 60,2 cm)
- ☐ **x8** **HUD** 2 x 3 x 44-3/8" (5,1 x 7,6 x 112,7 cm)
- ☐ **x1** **QXA** 2 x 3 x 51-7/8" (5,1 x 7,6 x 131,8 cm)
- ☐ **x2** **OV** 2 x 3 x 69" (5,1 x 7,6 x 175,3 cm)
- ☐ **x2** **ONB** 2 x 3 x 69-7/8" (5,1 x 7,6 x 177,5 cm)
- ☐ **x2** **RPY** 2 x 4 x 80-11/16" (5,1 x 10,2 x 204,9cm)
- ☐ **x1** **PT** 2 x 3 x 96" (5,1 x 7,6 x 243,8 cm)
- ☐ **x2** **TPC** **Tapered Profile** 2 x 4 x 96-3/4" (5,1 x 10,2 x 245,7 cm)
- ☐ **x4** **UXA** 2 x 4 x 96-3/4" (5,1 x 10,2 x 245,7 cm)

FLOOR

- ☐ **x2** **TREATED** 2 x 4 x 72" (5,1 x 10,2 x 182,9 cm)
- ☐ **x4** **TREATED** 2 x 4 x 93" (5,1 x 10,2 x 236,2 cm)

FLOOR PANELS

NOTE: Panels are *not stamped* for identification. Floor panels are 5/8" (1,6 cm) thick.

- ☐ **x1** 5/8" x 23-7/8" x 96" (1,6 x 60,6 x 243,8 cm)



- ☐ **x1** 5/8" x 48" x 96" (1,6 x 121,9 x 243,8 cm)

PARTS LIST

WALL PANELS

NOTE: Panels are *not stamped* for identification.

☐ **x1**

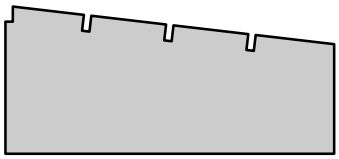

3/8" x 32-7/16" x 72"
(1,0 x 82,4 x 182,9 cm)

☐ **x1**



3/8" x 23-7/8" x 96"
(1,0 x 60,6 x 243,8 cm)

☐ **x1**

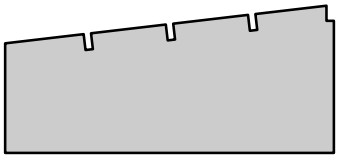

3/8" x 32-7/16" x 72"
(1,0 x 82,4 x 182,9 cm)

☐ **x1**

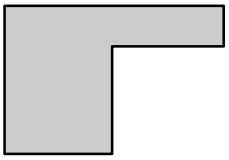

3/8" x 32-7/16" x 48"
(1,0 x 82,4 x 121,9 cm)

☐ **x1**

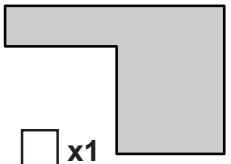

3/8" x 32-7/16" x 48"
(1,0 x 82,4 x 121,9 cm)

☐ **x2**



3/8" x 47-1/8" x 72"
(1,0 x 119,7 x 182,9 cm)

☐ **x2**



3/8" x 23-9/16" x 47-1/8"
(1,0 x 59,8 x 119,7 cm)

☐ **x1**



3/8" x 47-1/8" x 96"
(1,0 x 119,7 x 243,8 cm)

TRIM & FASCIA

NOTE: Wall & fascia trim parts are *not stamped* for identification.

☐ **x2**

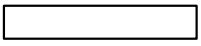

3/8" x 4-7/8" x 28-1/2" (1,0 x 12,4 x 72,4 cm)

☐ **x2**

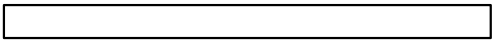

3/8" x 4-7/8" x 72" (1,0 x 12,4 x 182,9 cm)

☐ **x1**

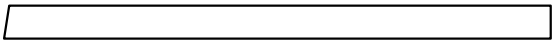

3/8" x 4-7/8" x 80-7/8" (1,0 x 12,4 x 205,4 cm)

☐ **x1**

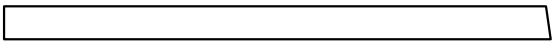

3/8" x 4-7/8" x 80-7/8" (1,0 x 12,4 x 205,4 cm)

☐ **x2**

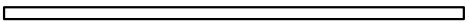

3/8" x 1-3/4" x 67-1/8" (1,0 x 4,4 x 170,5 cm)

☐ **x2**

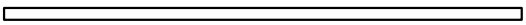

3/8" x 1-3/4" x 75-11/16" (1,0 x 4,4 x 192,2 cm)

☐ **x1**

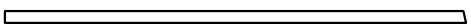

3/8" x 1-3/4" x 67-5/16" (1,0 x 4,4 x 171,0 cm)

☐ **x1**

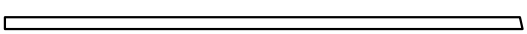

3/8" x 1-3/4" x 75-11/16" (1,0 x 4,4 x 192,2 cm)

☐ **x1**

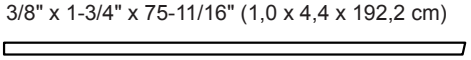

3/8" x 1-3/4" x 67-5/16" (1,0 x 4,4 x 171,0 cm)

☐ **x1**

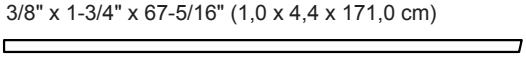

3/8" x 1-3/4" x 75-11/16" (1,0 x 4,4 x 192,2 cm)

PARTS LIST

SOFFIT TRIM

NOTE: Soffit trim parts are *not stamped* for identification.

☐ **x1**



3/8" x 5-13/16" x 24" (1,0 x 14,8 x 61 cm)

☐ **x1**



3/8" x 5-13/16" x 75-3/4" (1,0 x 14,8 x 192,4 cm)

☐ **x1**

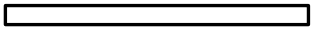

3/8" x 1-1/2" x 23-7/8" (1,0 x 3,8 x 60,6 cm)

☐ **x1**

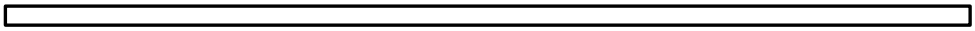

3/8" x 1-1/2" x 76" (1,0 x 3,8 x 193 cm)

☐ **x2**

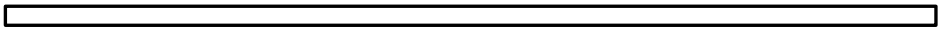

3/8" x 1-1/2" x 73-5/16" (1,0 x 3,8 x 192,4 cm)

DOORS

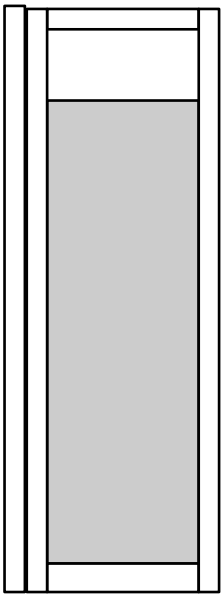

☐ **x1**

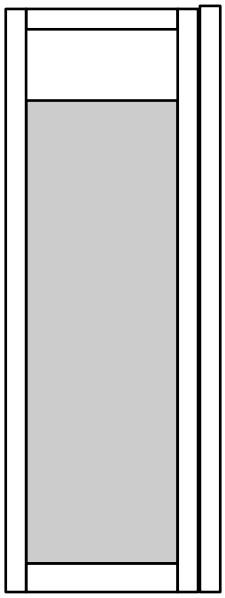

☐ **x1**

☐ **x2**



10-1/2" x 20-3/4" (26,7 x 52,7 cm)

☐ **x8**

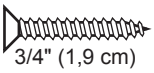

3/4" (1,9 cm)

☐ **x8** **RIC**

3/8" x 3-1/2" x 18-5/8" (1,0 x 8,9 x 47,3 cm)

☐ **x1** **AIB**

3/8" x 3-1/2" x 55-9/16" (1,0 x 8,9 x 141,1 cm)

☐ **x1** **AIC**

3/8" x 3-1/2" x 55-9/16" (1,0 x 8,9 x 141,1 cm)

☐ **x1** **IFA**

3/8" x 3-1/2" x 10-3/4" (1,0 x 8,9 x 27,3 cm)

☐ **x1** **JSA**

3/8" x 1-1/2" x 54-9/16" (1,0 x 3,8 x 138,6 cm)

☐ **x2** **OO**

69" Door Stiffener (175,3 cm)

☐ **x1**



48" Metal Threshold



3/4" (1,9 cm) **x9**

Bagged separately / special coating

☐ **x1**

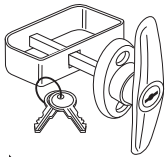

☐ **x2**



1-1/2" (3,8 cm)

☐ **x2**

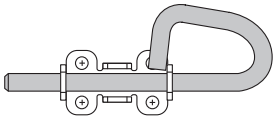

☐ **x8**



1" (2,5 cm)

ROOF PANELS

☐ **x5**

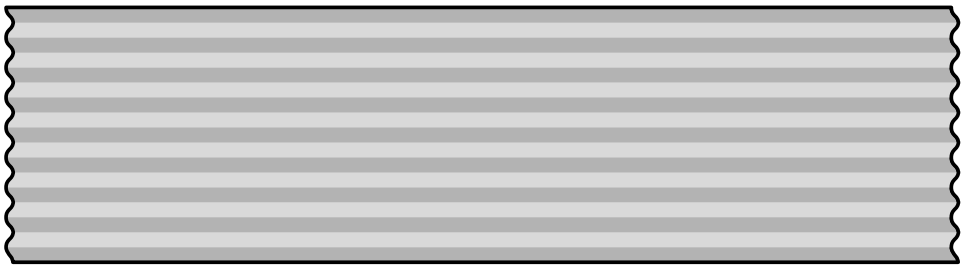

26" x 82-1/2" (66 x 209,6 cm)

☐ **x2**



Foam Strip (BAG of 5) 26" (66 cm)

☐ **x200**

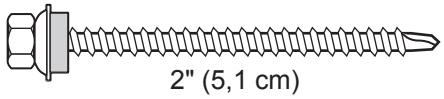

2" (5,1 cm)

METAL TRIM / RAKE FLASHING

☐ **x3**

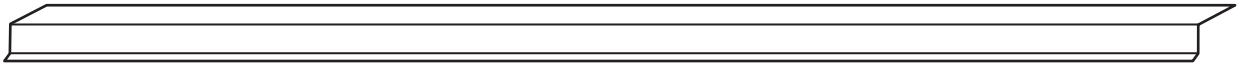

Rake Flashing 15454 1-1/4" x 95-1/2" (3,2 x 242,6 cm)

FASTENER / HARDWARE BAG

☐ **x75**  3" (7,6 cm)

☐ **x35**  2" (5,0 cm)

☐ **x32**  #8 x 3/4" (1,9 cm)

☐ **x13**  3/4" (1,9 cm)

☐ **x12**  1" (2,5 cm)

☐ **x235** 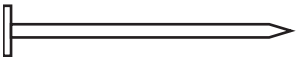 1-1/2" (3,8 cm)

☐ **x375**  2" (5,1 cm)

NOTE:
If you are using a nail gun, nails may be used where screws are shown for quicker assembly.
Length of nail must match screw length.

CONCRETE FOUNDATION

If you choose to install your kit on a concrete slab refer to the diagram below.

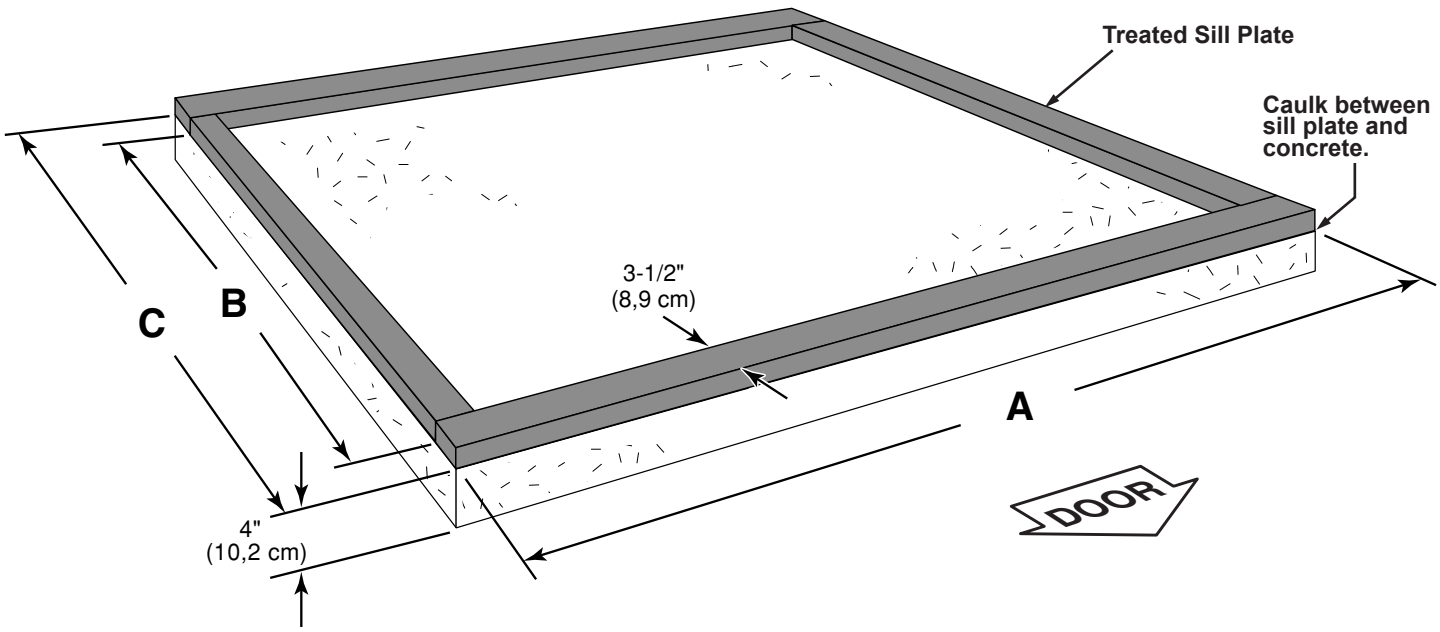

Building Size	Actual Size	A	B	C
8' x 6' (243,8 cm x 182,9 cm)	96" x 72" (243,8 cm x 182,9	96" (243,8 cm)	65" (165,1 cm)	72" (182,9 cm)

Requires:

☐ **x4** 2 x 4 x 8' (5,1 x 10,2 x 243,8 cm) ⚠ **MUST be treated lumber.**
Cut (2) down to: 2 x 4 x 65" (5,1 x 10,2 x 165,1 cm)

☐ **x1** Caulk

⚠ Allow new concrete slabs to cure for at least seven (7) days.

- A treated 2 x 4 (5,1 x 10,2 cm) sill plate is required when installing your shed on concrete. **Hint: Purchase full length treated lumber.**
- Use a high quality exterior grade caulk beneath all sill plates.
- Fasten 2 x 4 (5,1 x 10,2 cm) sill plates to slab using approved concrete anchors **(fasteners not included)**.
- Check local code for concrete foundation requirements.

NOTES

COMPONENT SECTION INDEX

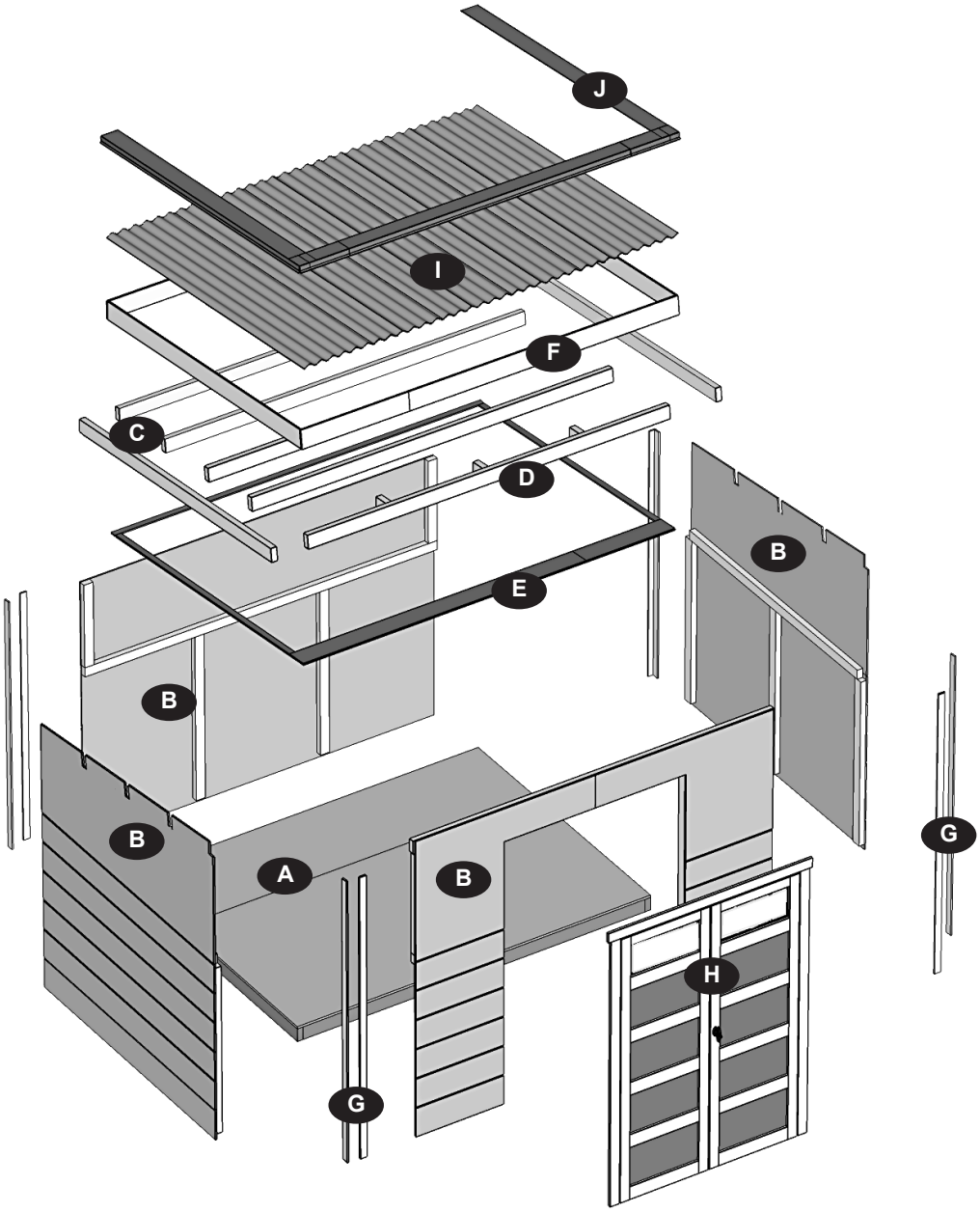

Description	Section	Page
Floor	A	11
Walls	B	15
Roof Framing	C	30 & 34
Front Overhang	D	32
Soffit	E	35
Fascia	F	36
Corner Trim	G	37 & 47
Doors	H	38
Roof Panels	I	48
Rake Flashing	J	54

OPTIONAL WOOD FRAME FLOOR LEVELING OPTIONS

There are multiple ways to level your floor frame. Our recommended leveling method is shown below.
Leveling materials are not included in this kit.

PREFERRED METHOD - 4 x 4 TREATED RUNNERS (Typical for 8' x 6' Kit)

Runners are generally 12" (30,5 cm) from ends of floor frame and under seams.

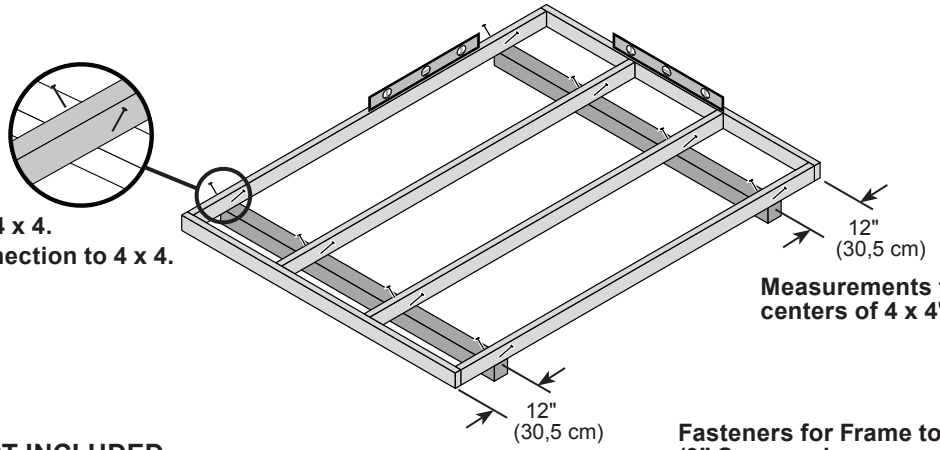

• 3" Screws angled into 4 x 4.
• (2) screws at each connection to 4 x 4.

Measurements to centers of 4 x 4's.

⚠ FLOOR FRAME NOT INCLUDED

Fasteners for Frame to 4 x 4. (3" Screws shown as one option.) Minimum 3" screws / exterior grade.

☐ **x16** 3" (7,6 cm)

MATERIAL REQUIRED

☐ **x2** 4 x 4 x 6' (10,2 x 10,2 x 182,9 cm) Treated Lumber

⚠ Use only wood treated for ground contact and fasteners approved for use with treated wood.

⚠ Always support frame seams.

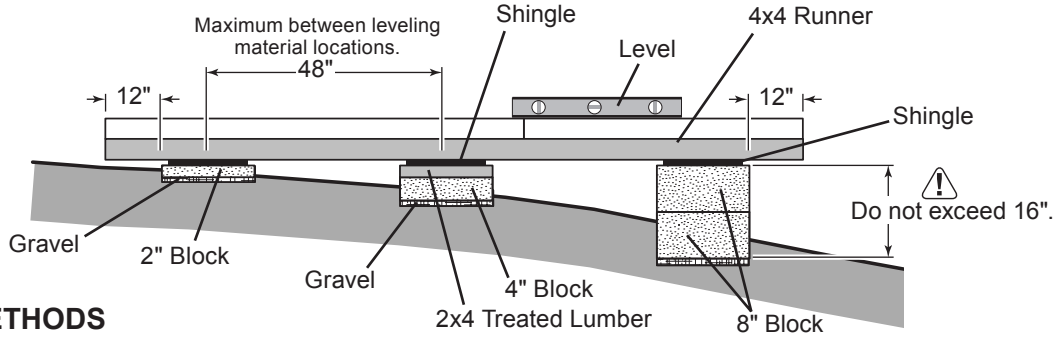

LEVELING METHODS

- Level under 4x4 runners only.
- Locate leveling material 12" from ends of runners and no more than 48" apart.
- Asphalt shingles should be used between 4x4 runners and blocks or treated lumber. Never use shingles in direct contact with ground.
- For best results and aiding in water drainage use gravel under each concrete block.

LEVELING MATERIALS

☐ Gravel
☐ Solid Masonry Blocks in 1", 2", 4" or 8" thickness
☐ 2x4 Treated Lumber
☐ Asphalt Shingles

⚠ Leveling higher than 16" not recommended.

CONCRETE

- If you are building your shed on a concrete foundation see page 8.

FLOOR FRAME

PARTS REQUIRED:

x4 TREATED
2 x 4 x 93" (5,1 x 10,2 x 236,2 cm)

x2 TREATED
2 x 4 x 72" (5,1 x 10,2 x 182,9 cm)

Look for **TREATED** Stamp

x16
3" (7,6 cm)

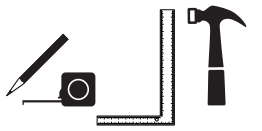

BEGIN

1 Arrange parts as shown on flat surface. Measure and mark. Secure with (2) 3" nails at each mark.

HINT:
For easier nailing stand on frame.

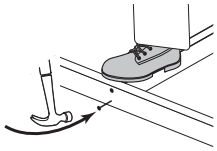

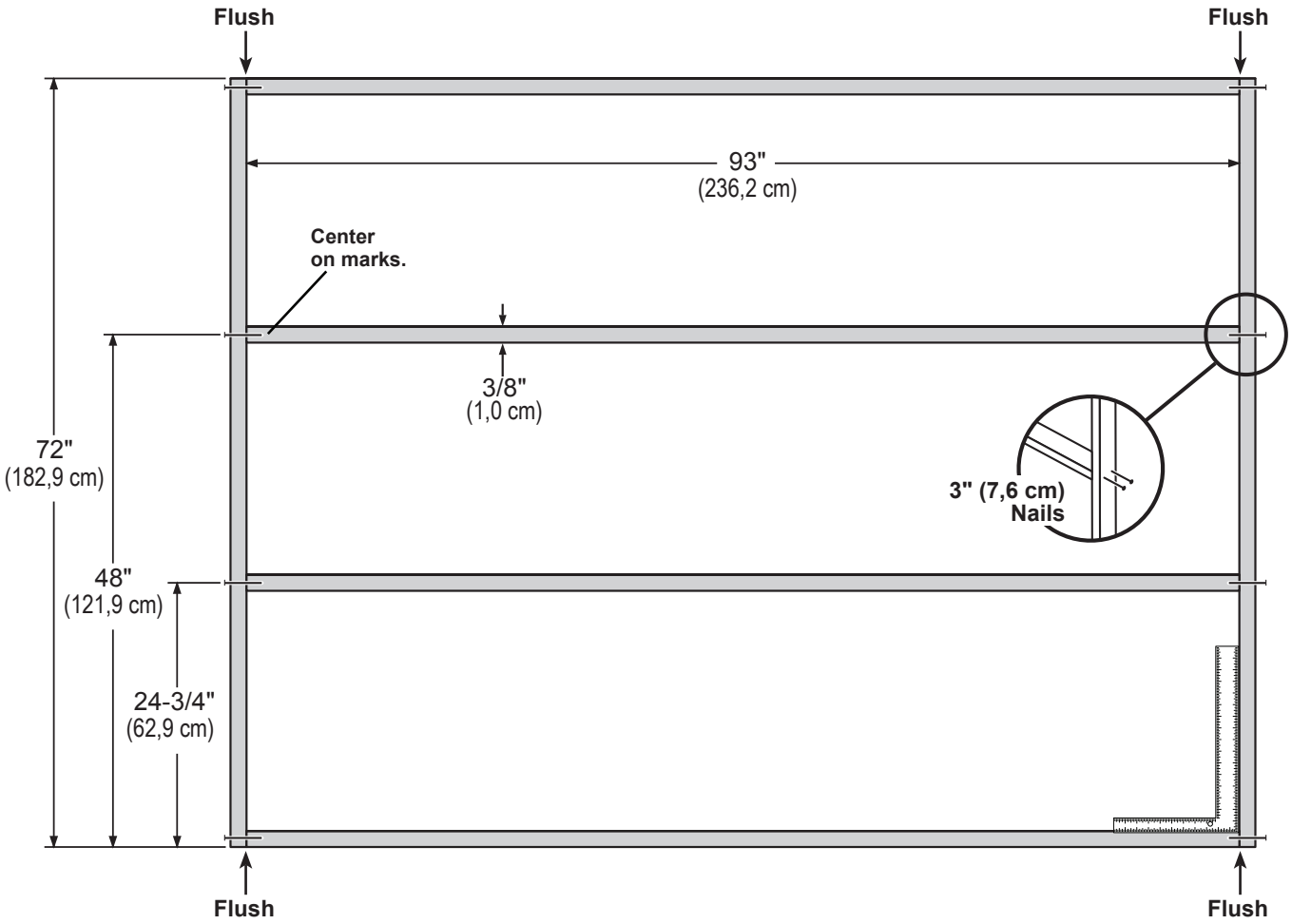

FINISH

Your floor frame is now complete.

STOP!

⚠ *LEVEL AND SQUARE FLOOR FRAME* ⚠

Before attaching floor decking, it is important to level and square the floor frame.
A level and square floor frame is required to correctly construct your shed.

STOP!

OPTIONAL 4x4 RUNNERS ARE NOT INCLUDED WITH THIS SHED

BEGIN

1. ⚠ See page 10 for the preferred floor leveling method.

2. Use a level to ensure the frame is level before installing floor panels.

3. Check for frame squareness by measuring diagonally across corners.
   If the measurements are the same, the frame is square.
   The diagonal measurement will be approximately 120" (304,8 cm).

4. When the frame is level and square, secure one side of frame to the 4x4 runners using one fastener at ends of each runner. Move to the opposite end of the frame.
   Secure the frame to 4x4 runners with one fastener at ends of each runner, making sure the frame remains square.

FINISH

After the floor frame is level and square, fasten the frame to the 4x4 runners at each point where the frame contacts the 4x4 runners.

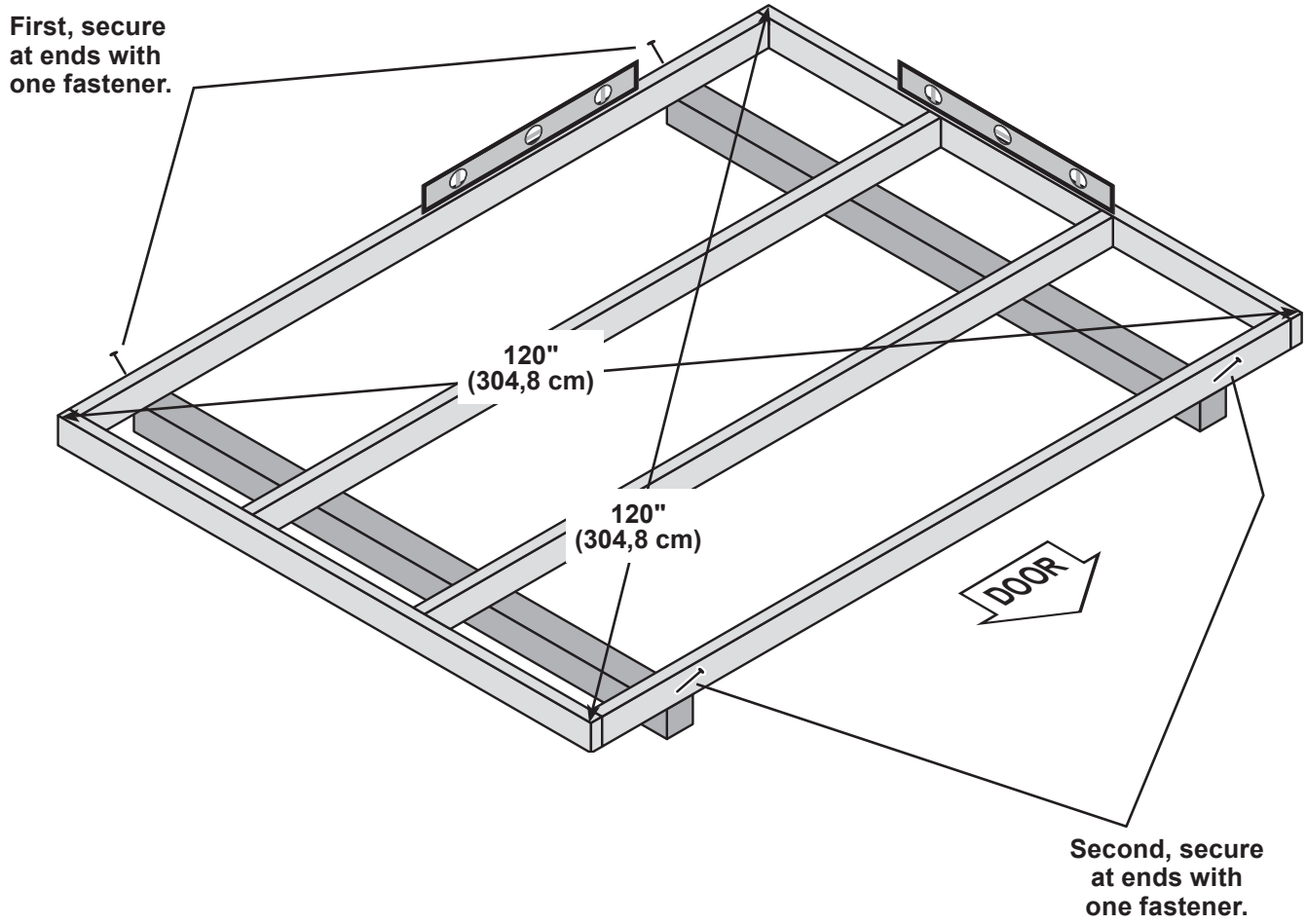

FLOOR PANELS

PARTS REQUIRED:

x1 — 5/8" x 48" x 96" (1,6 x 121,9 x 243,8 cm)

x1 — 5/8" x 23-7/8" x 96" (1,6 x 60,6 x 243,8 cm)

x95 — 2" (5,1 cm)

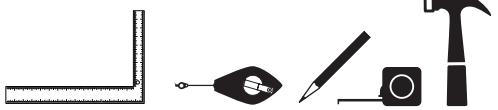

Install panels with the rough side facing up (painted grid lines).

BEGIN

1 Install the **48" x 96"** panel with the 48" edge and corner flush to the floor frame **(Fig A)**. Ensure 3/4" measurement on the frame. Secure panel with (2) 2" nails in the corners.

2 Move to the opposite side. Using the long edge of the panel as a lever, move the panel side-to-side until the corner is flush to the floor frame and **(Fig. B)**. Ensure 3/4" measurement on the frame. Secure panel with (2) 2" nails in the corners.

3 Install the **23-7/8" x 96"** panel flush to installed panel and flush to the floor frame. Secure panel with (1) 2" nail in each corner.

Fig. A

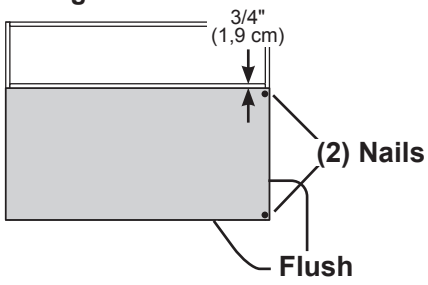

Fig. B

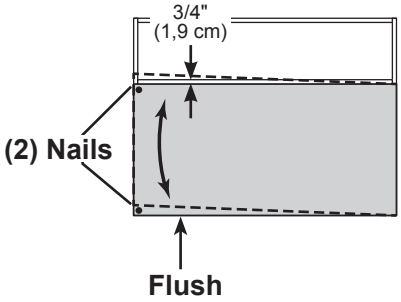

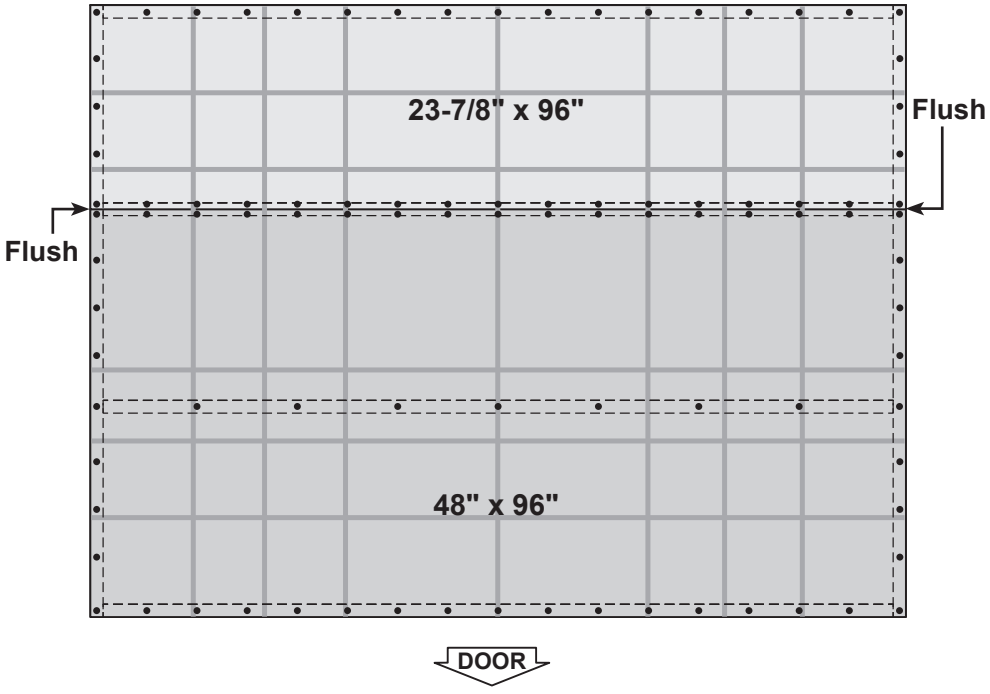

4 Continue securing the panels with 2" nails spaced 6" apart on edges and 12" apart inside panels.

FINISH

Your floor is now assembled.

IMPORTANT!

STOP!

Check that the floor frame is level after installing floor panels. Re-level if needed.

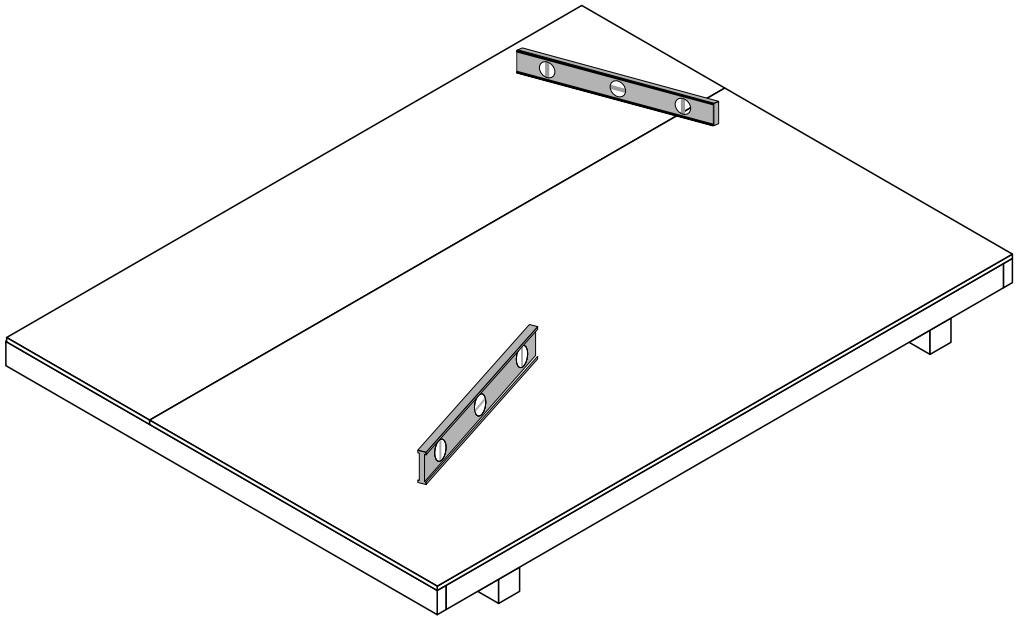

HINT:

- **The floor should be used as a level work surface for wall construction.**
- **Organize your wall sections during sub-assembly to avoid over-handling of the walls.**

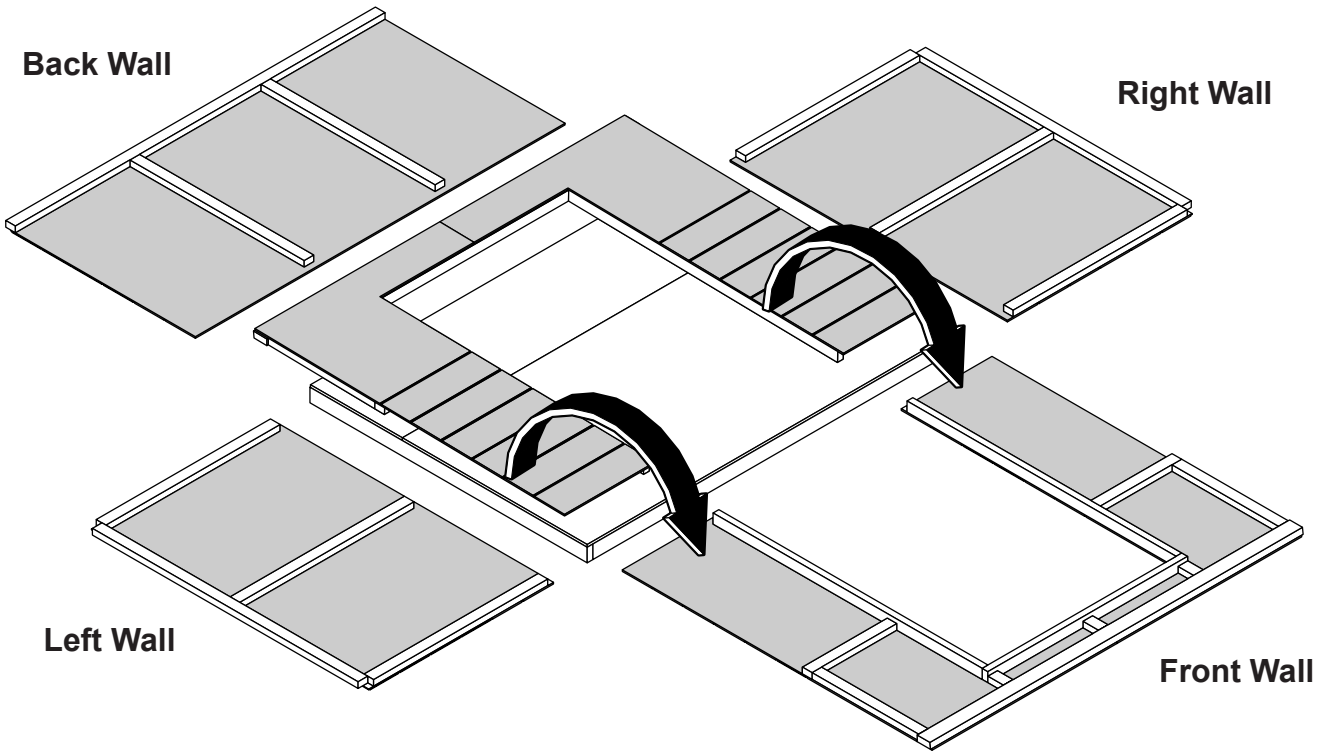

SIDE WALLS

PARTS REQUIRED:

x6 HUD
2 x 3 x 44-3/8" (5,1 x 7,6 x 112,7 cm)

x2 OV
2 x 3 x 69" (5,1 x 7,6 x 175,3 cm)

x2 47-1/8" x 72"
(119,7 x 182,9 cm)

x4
3" (7,6 cm)

x72
1-1/2" (3,8 cm)

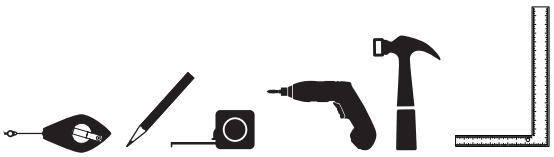

Build 2 identical side walls.

BEGIN

1

Arrange **HUD** and **OV** on flat on floor.
Center parts and mark.

Secure with (2) 3" screws at an angle.

Predrill holes with 1/8" bit.

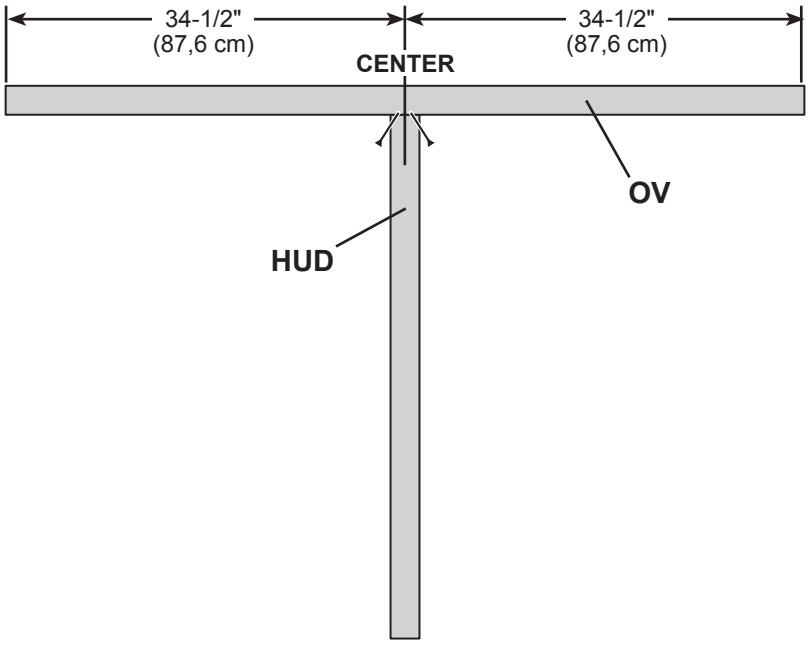

2

Arrange (2) **HUD** on flat on floor, as shown.
Measure 1-1/4" from edge of **OV** and mark at each side.

Place **47-1/8" x 72"** panel over parts and at measurement on **OV**.

Flush **HUD** to **OV** and along edges of panel.
Ensure lip edge of panel is on OV.

Secure panel to 2x3 parts with 1-1/2" nails spaced 6" apart along edges and 12" apart in panel center.

Repeat steps to build the 2nd side wall.

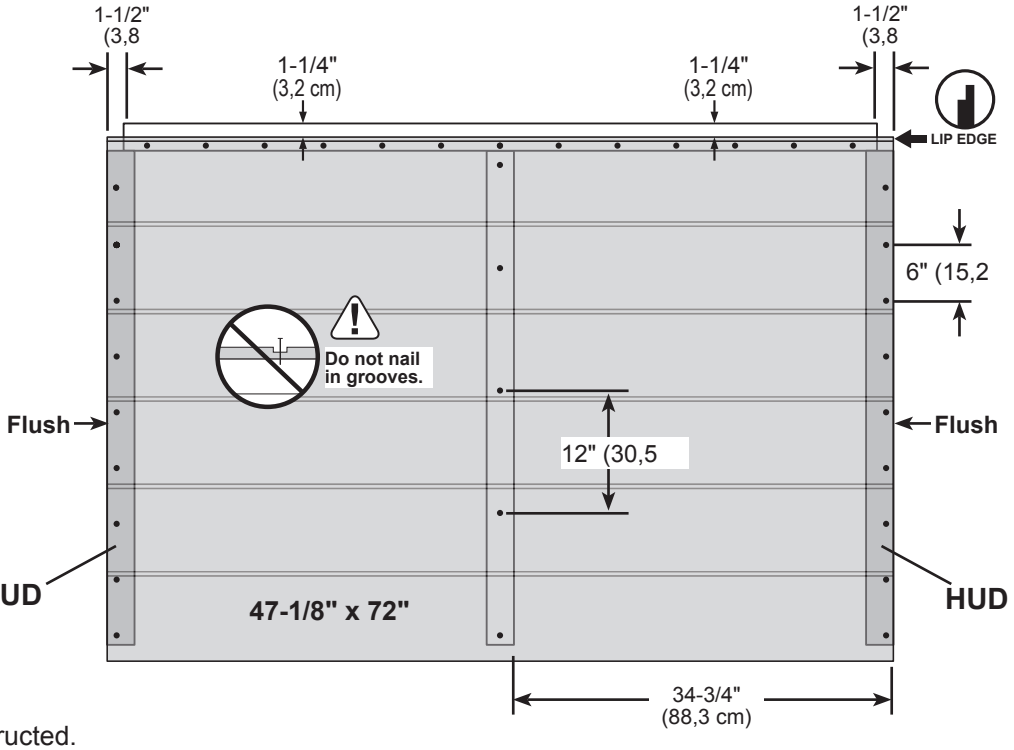

FINISH

Your lower side walls are now constructed.

BACK WALL PREASSEMBLIES

PARTS REQUIRED:

x2 **HUD** — 2 x 3 x 44-3/8" (5,1 x 7,6 x 112,7 cm)

x2 **TNB** — 2 x 3 x 22-5/8" (5,1 x 7,6 x 22,9 cm)

x1 **PT** — 2 x 3 x 96" (5,1 x 7,6 x 243,8 cm)

x4 — 3" (7,6 cm)

x37 — 1-1/2" (3,8 cm)

x1 — 47-1/8 x 96" (119,7 x 243,8 cm)

x1 — 3/8" x 23-7/8" x 96" (1,0 x 60,6 x 243,8 cm)

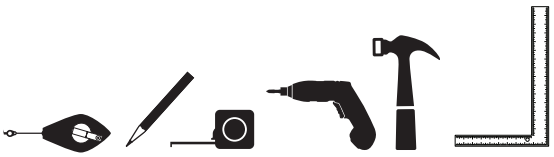

BEGIN

1

Arrange **HUD** and **PT** on flat on floor.
Center parts and mark.
Secure with (2) 3" screws at an angle.
Predrill all screw-holes with 1/8" bit.

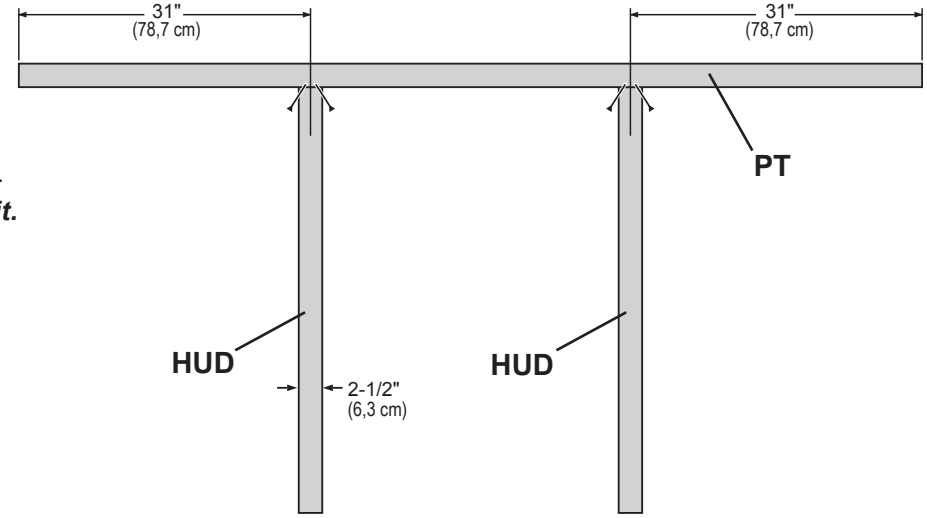

2

Measure 1-1/4" from edge of **PT** and mark at each side.

Place **47-1/8" x 96"** panel over parts and at measurement on **PT**: 1-1/4".
Flush panel to ends of **PT**.
Ensure lip edge of panel is on PT.

Check measurement to center of each **HUD**: (31").

Secure panel to 2x3 parts with 1-1/2" nails spaced 6" apart along edges and 12" apart in panel center.

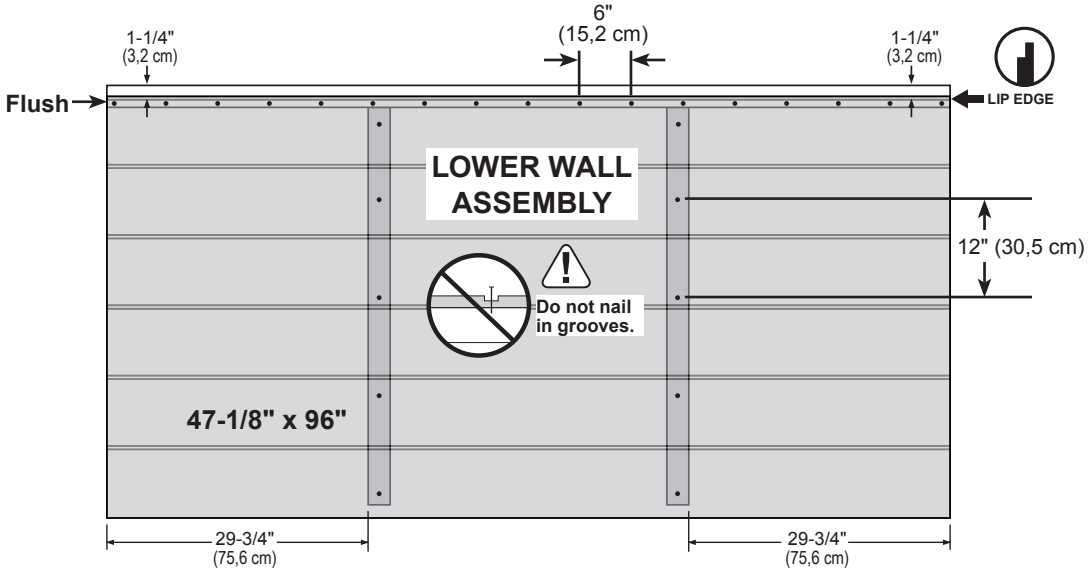

3

Arrange (2) **TNB** on flat on floor.
Place **23-7/8" x 96"** panel ***(with primed side facing up)*** over parts and at the measurement of 1-1/4".
Flush **TNB** to panel edges.

Secure panel with 1-1/2" nails spaced 6" apart along edges

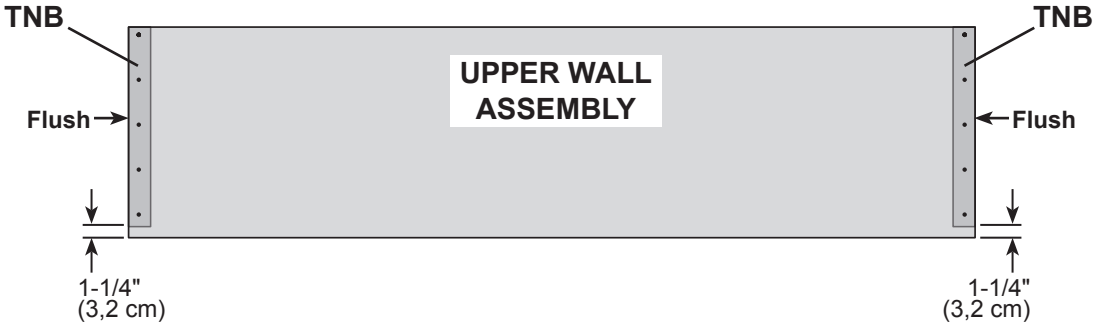

FINISH

Your lower and upper back wall sub-assemblies are now constructed.

FRONT WALL UPPER FRAME

PARTS REQUIRED:

x3 **FAB**
2 x 3 x 3-3/16" (5,1 x 7,6 x 8,1 cm)

x2 **LOA**
2 x 3 x 27-11/16" (5,1 x 7,6 x 60,2 cm)

x2 **WFS**
2 x 3 x 22-1/16" (5,1 x 7,6 x 56 cm)

x1 **TPC** **Tapered Profile**
2 x 4 x 96-3/4" (5,1 x 10,2 x 245,7 cm)

x14
3" (7,6 cm)

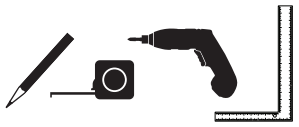

BEGIN

1 Arrange parts on flat-side on floor. Measure and mark.
Ensure profile angle of **TPC** is correct and ensure there is a 3/8" measurement at each end of **TPC**.
Secure with (2) 3" screws at an angle. ***Predrill all holes.***

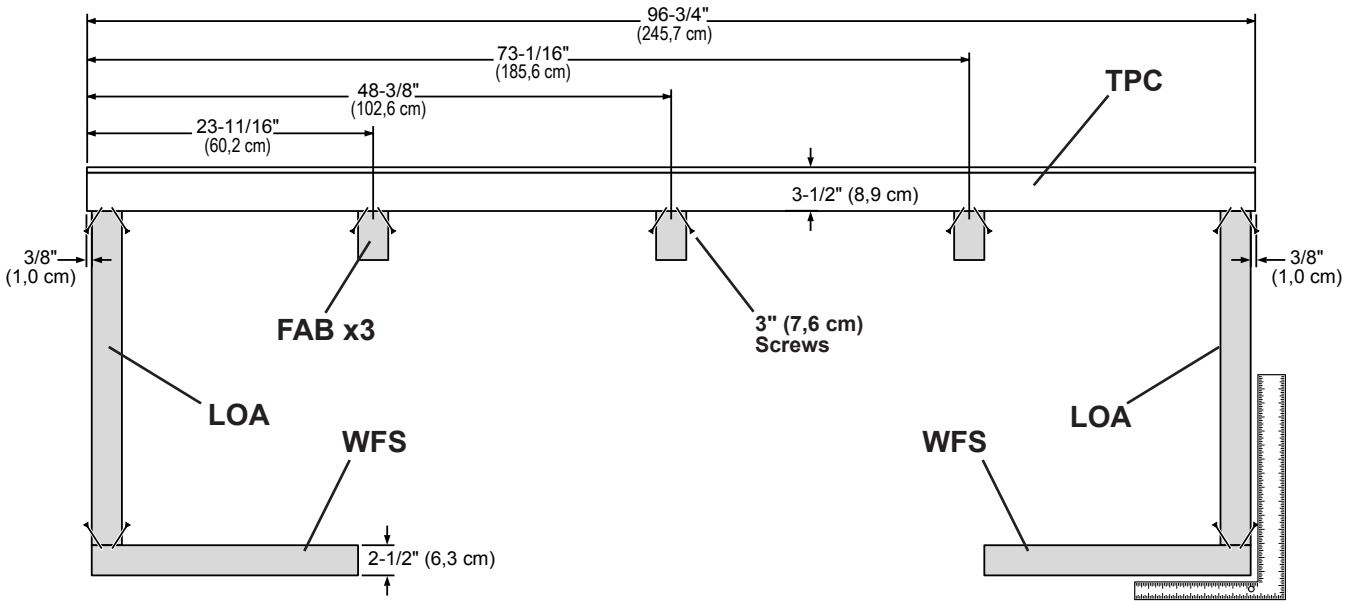

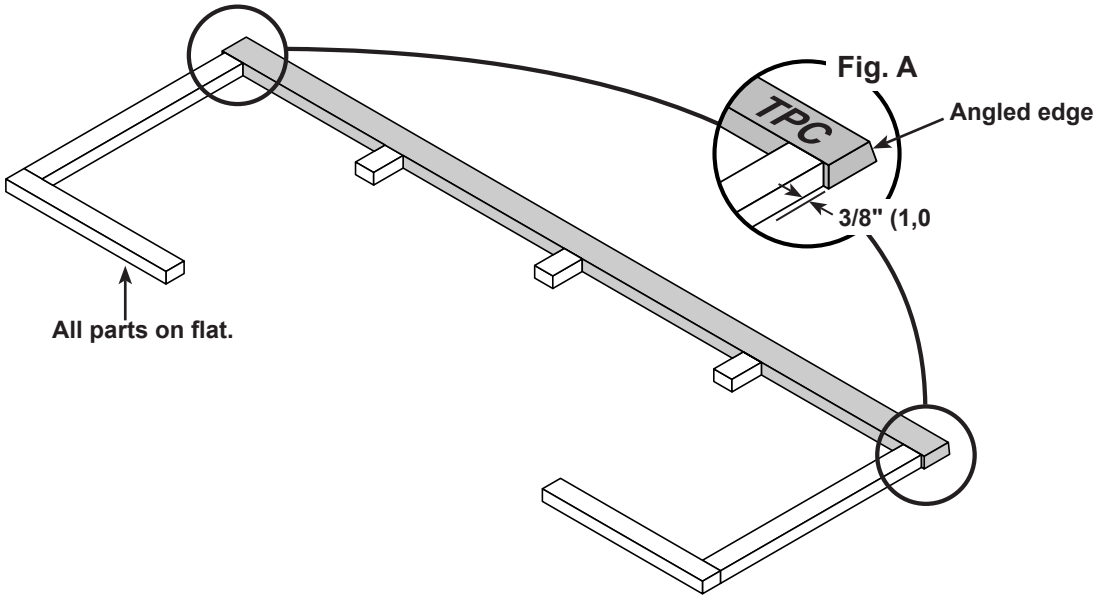

FRONT WALL FRAME PREASSEMBLY

PARTS REQUIRED:

x1 QXA
2 x 3 x 51-7/8" (5,1 x 7,6 x 131,8 cm)

x2 ONB
2 x 3 x 69-7/8" (5,1 x 7,6 x 177,5 cm)

x7 3" (7,6 cm)

x4 3" (7,6 cm)



2

Arrange **QXA** and **ONB** on edge on floor.
Secure parts with (2) 3" nails at each connection.

This is the preassembled door frame.

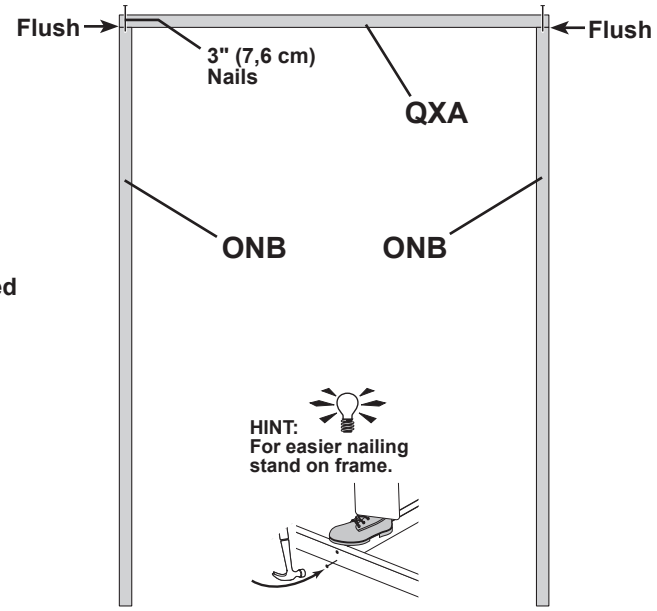

Fig. A

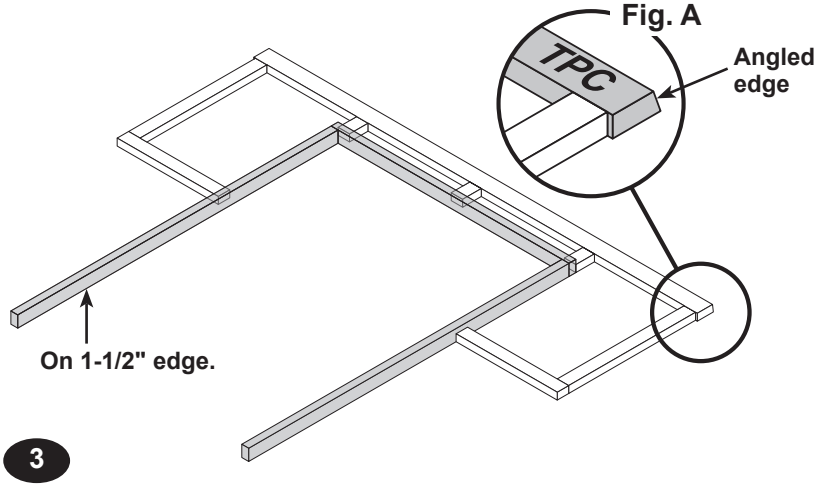

3

Verify that the profile angle of **TPC** is correct **(Fig. A)**.

Secure door frame to upper wall assembly with 3" screws at each connection shown.
Predrill all holes for 3" screws with 1/8" bit.

Ensure the 30-3/16" measurement to WFS.

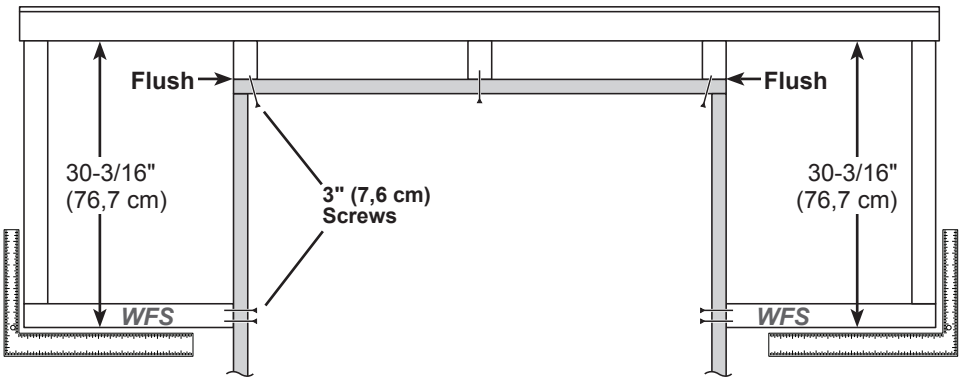

Fig. B

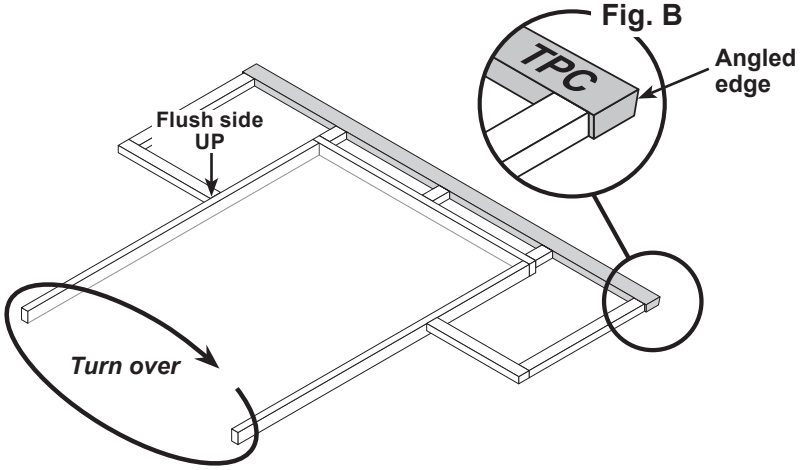

4

Carefully turn the preassembled door frame over,
(reference **TPC** angle in **Fig. B**).

FINISH

Your front wall frame is now assembled.

FRONT WALL PANELS

PARTS REQUIRED:

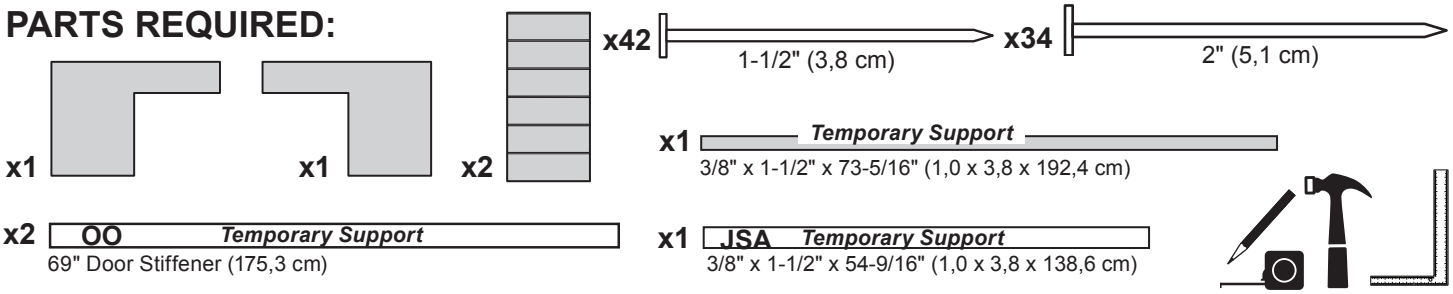

Install wall panels with the primed side facing out.

BEGIN

1

Place upper wall panels over frame. Flush panels in center, sides and top, as shown.

HINT: Support frame when nailing using **JSA** and (x1) 3/8" thick trim board as a temporary support.

Secure panels with 2" nails into door frame only. Secure with 1-1/2" nails into all other 2x3 frame parts.

Space nails 6" apart along edges.

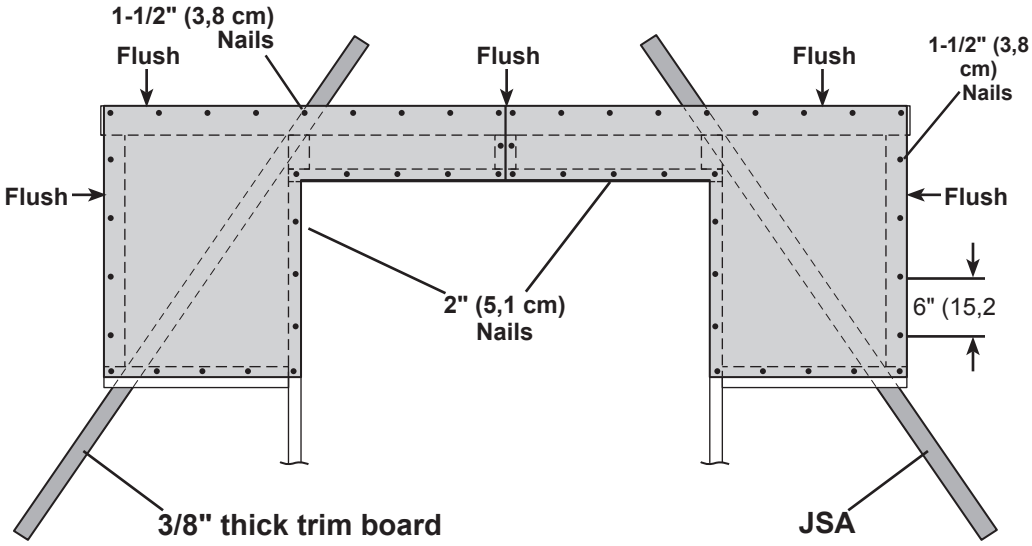

2

Install lower wall panels flush to installed panels and flush to the door frame.

Maintain the 48-7/8" measurement in the door opening.

Secure panels with 2" nails into door frame and with 1-1/2" nails into all other 2x3 frame parts.

Space nails 6" apart along edges.

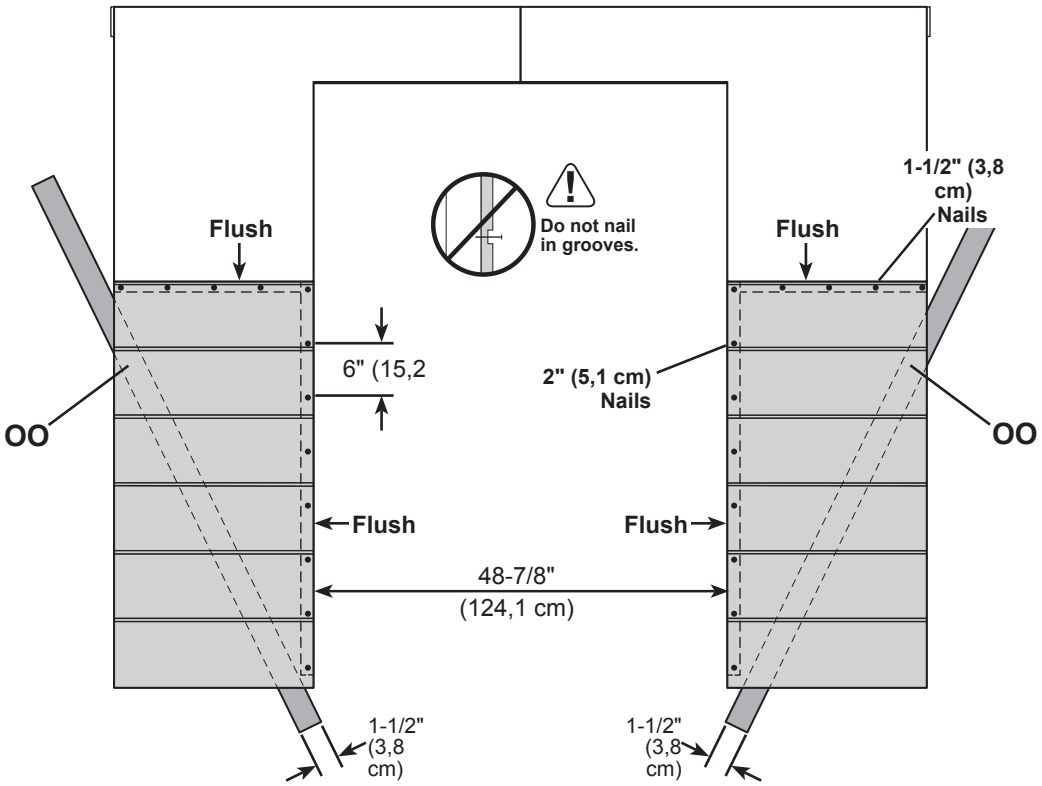

FINISH

Your front wall is now assembled.

LEFT WALL INSTALLATION

PARTS REQUIRED

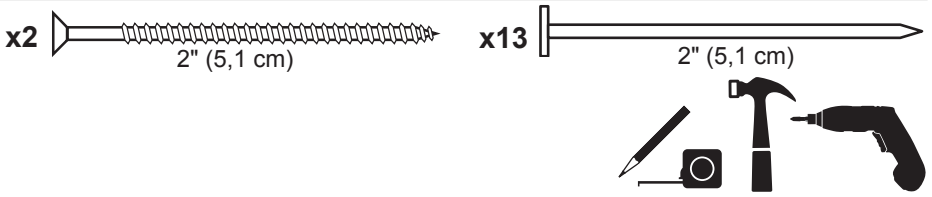

✓BEGIN

1

Center left wall on the 72" side of floor.
Secure wall panel to floor frame with (2) 2" screws.

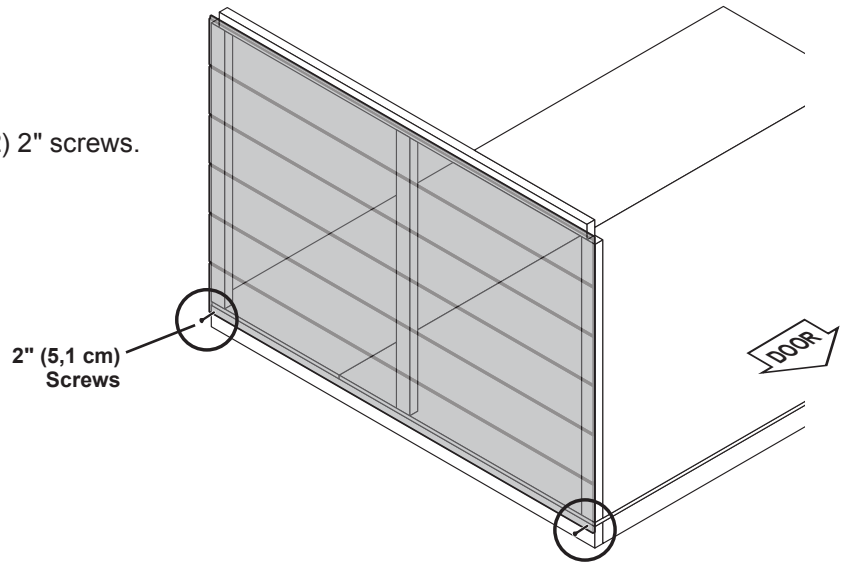

2

Secure lower edge of wall panels to floor with 2" nails spaced 6" apart.
Angle nails into floor frame.

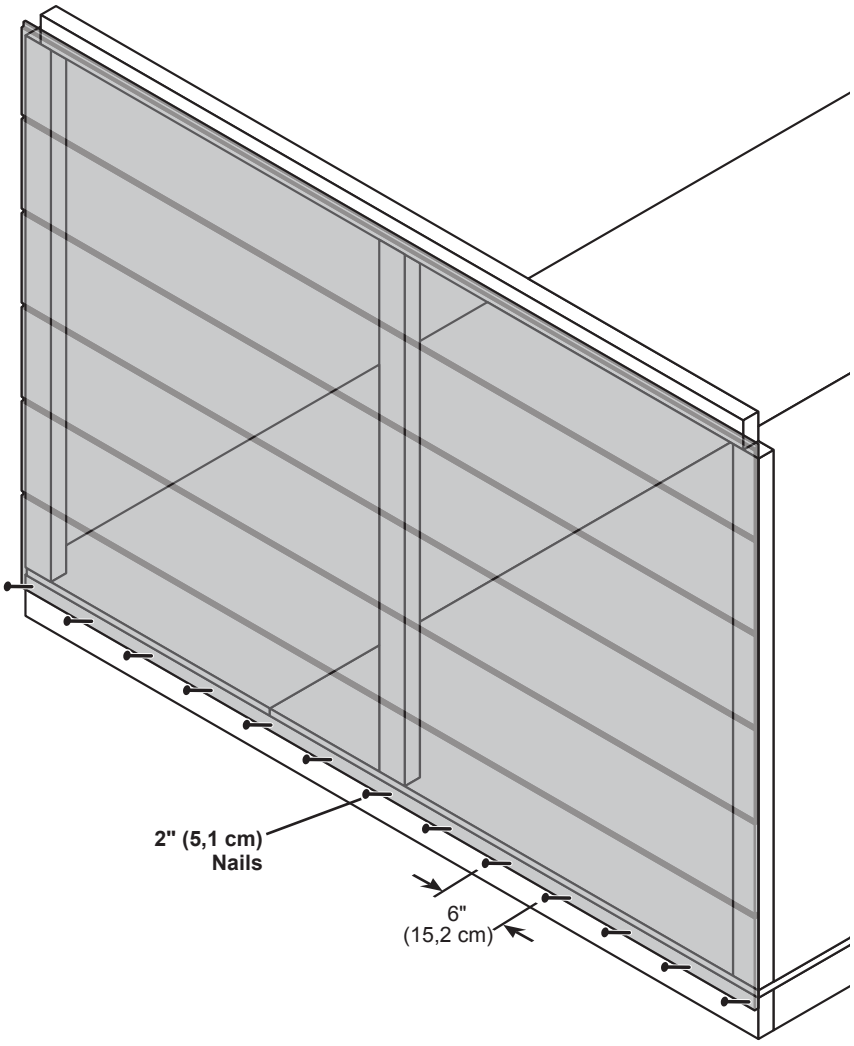

LEFT WALL INSTALLATION

PARTS REQUIRED

x4

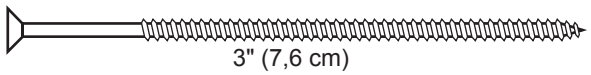

3" (7,6 cm)

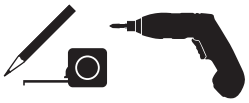

3

Secure wall studs to floor with 3" screws.

Predrill holes with 1/8" bit.

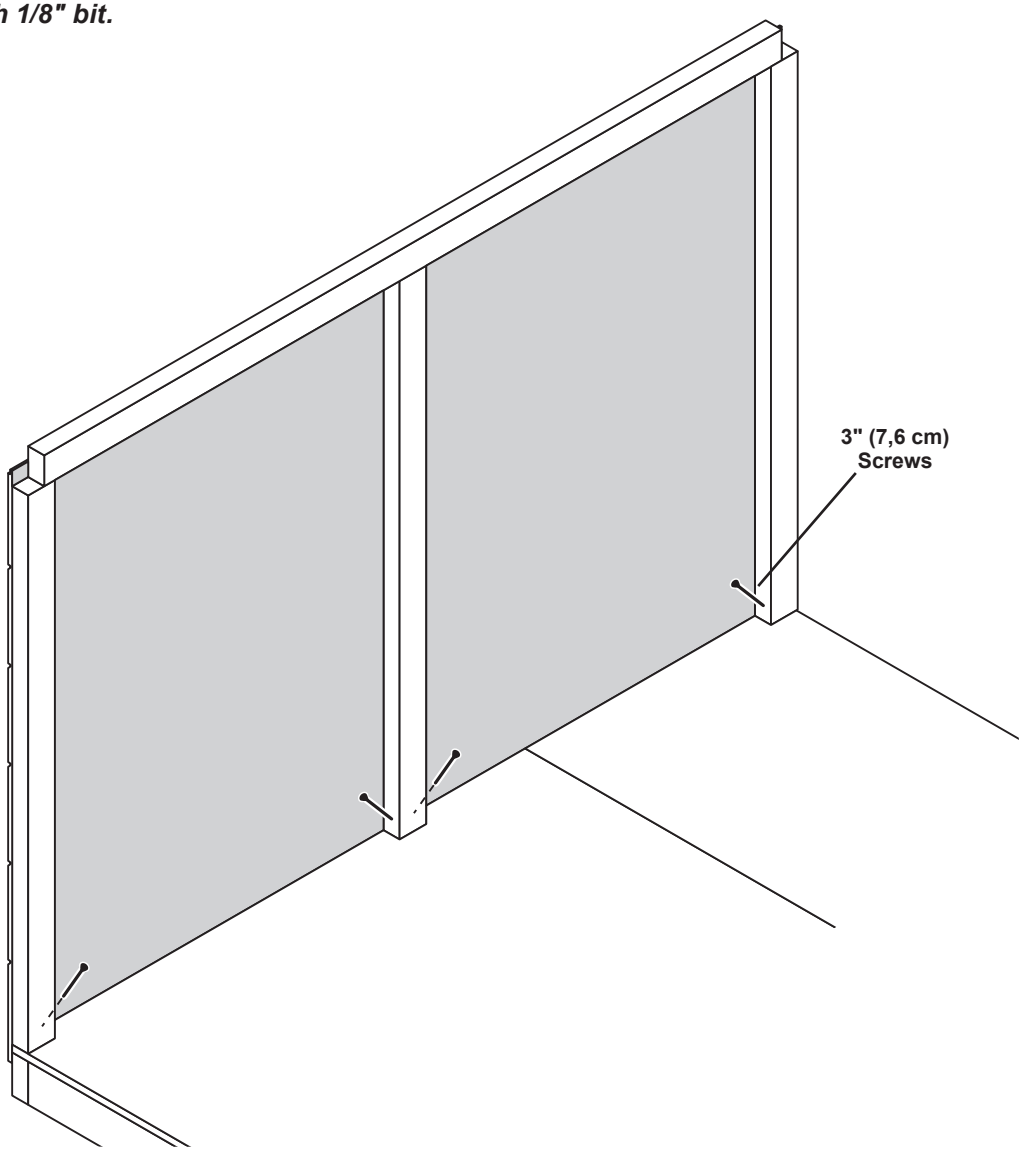

FINISH

Your left wall is now installed.

BACK WALL INSTALLATION

PARTS REQUIRED: x1 2" (5,1 cm) x1 3" (7,6 cm)

x17 2" (5,1 cm) x9 1-1/2" (3,8 cm)



✓BEGIN

1

Center back wall on the floor.

At bottom of back wall, secure back wall panel to left wall stud with (1) 2" screw.

Ensure corners are flush.

Predrill holes with 1/8" bit.

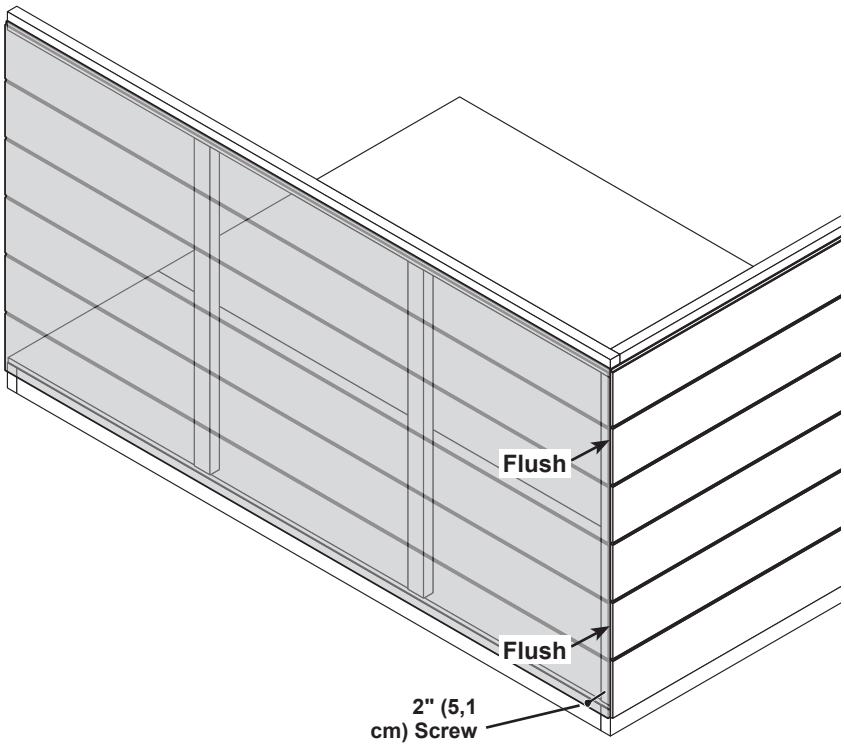

2

Secure lower edge of panel to floor frame with 2" nails spaced 6" apart.
Angle nails into floor frame.

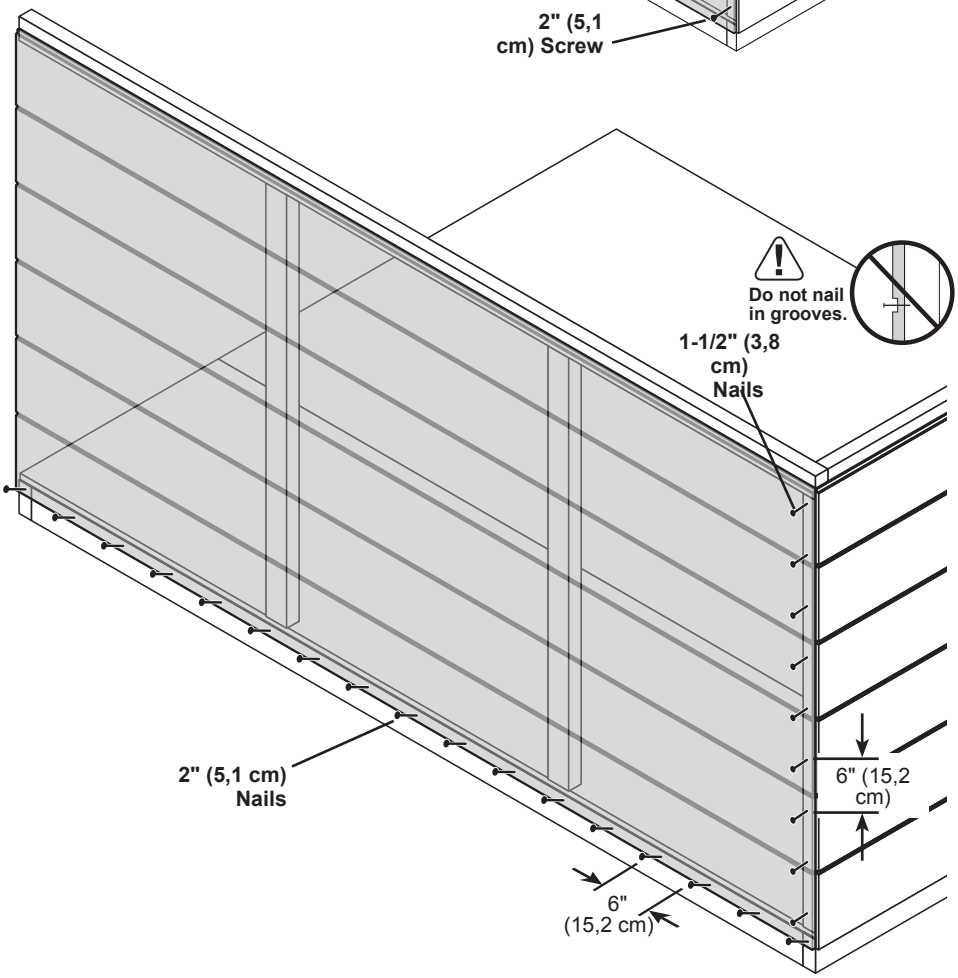

3

Secure back wall panel to left wall stud with 1-1/2" nails spaced 6" apart.

BACK WALL INSTALLATION

PARTS REQUIRED:

x5 

3" (7,6 cm)

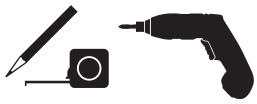

4

Working inside, secure left wall stud to back wall framing with (1) 3" screw at an angle **(Fig. B)**.

Secure wall studs with 3" screws angled into floor.

Predrill all holes with 1/8" bit.

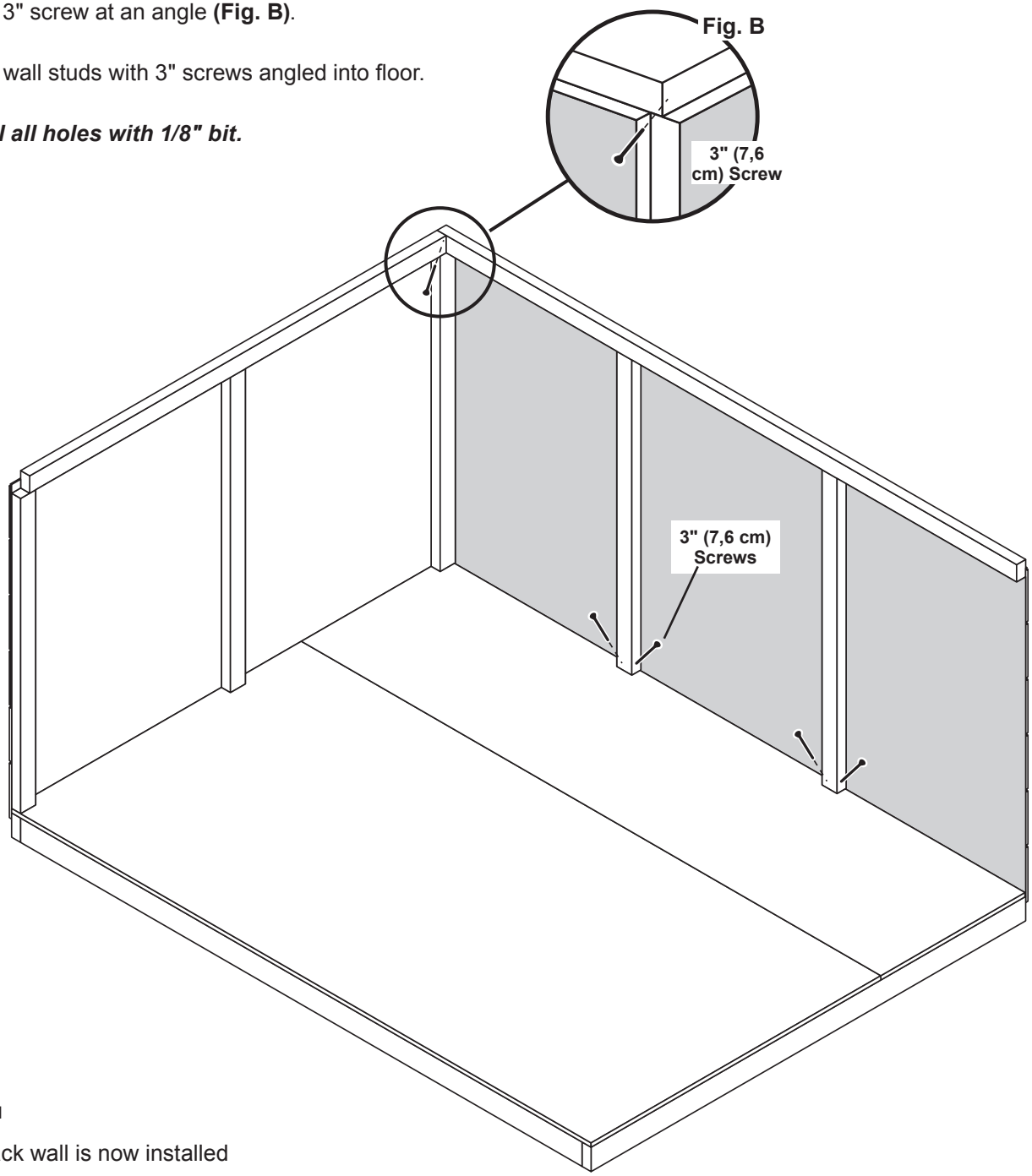

FINISH

Your back wall is now installed

RIGHT WALL INSTALLATION

PARTS REQUIRED

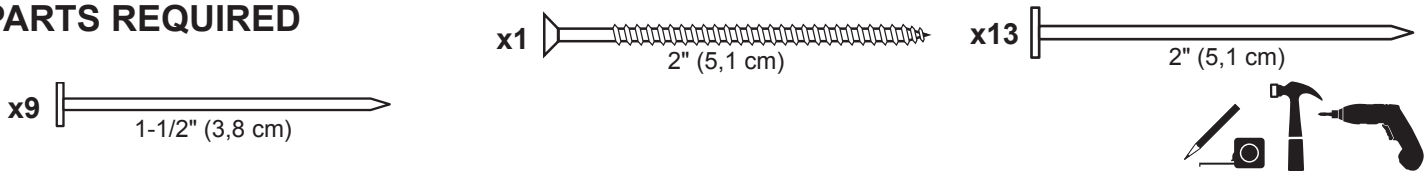

✓BEGIN

1

Center right wall on the floor.

At bottom of back wall, secure back wall panel to right wall stud with (1) 2" screw.

Ensure corners are flush.

Predrill hole with 1/8" bit.

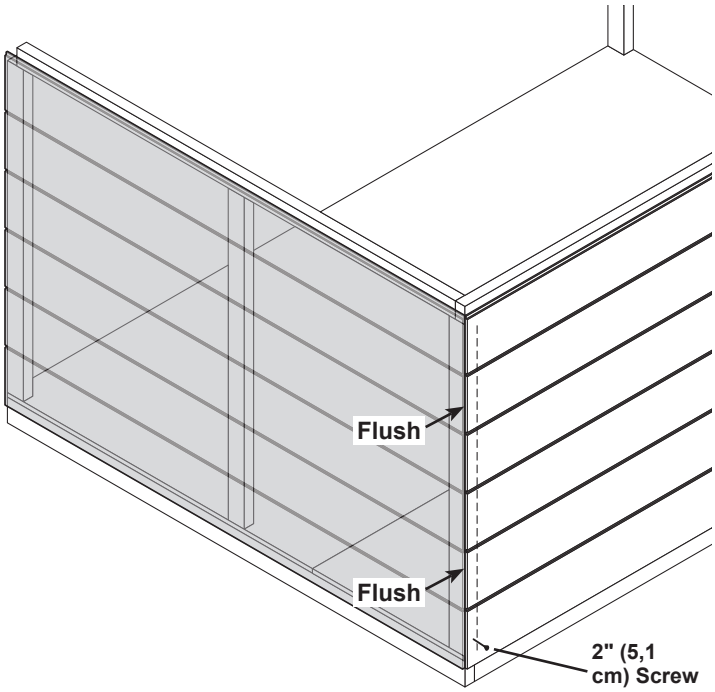

2

Secure lower edge of panel to floor frame with 2" nails spaced 6" apart.
Angle nails into floor frame.

3

Secure back wall panel to right wall stud with 1-1/2" nails spaced 6" apart.

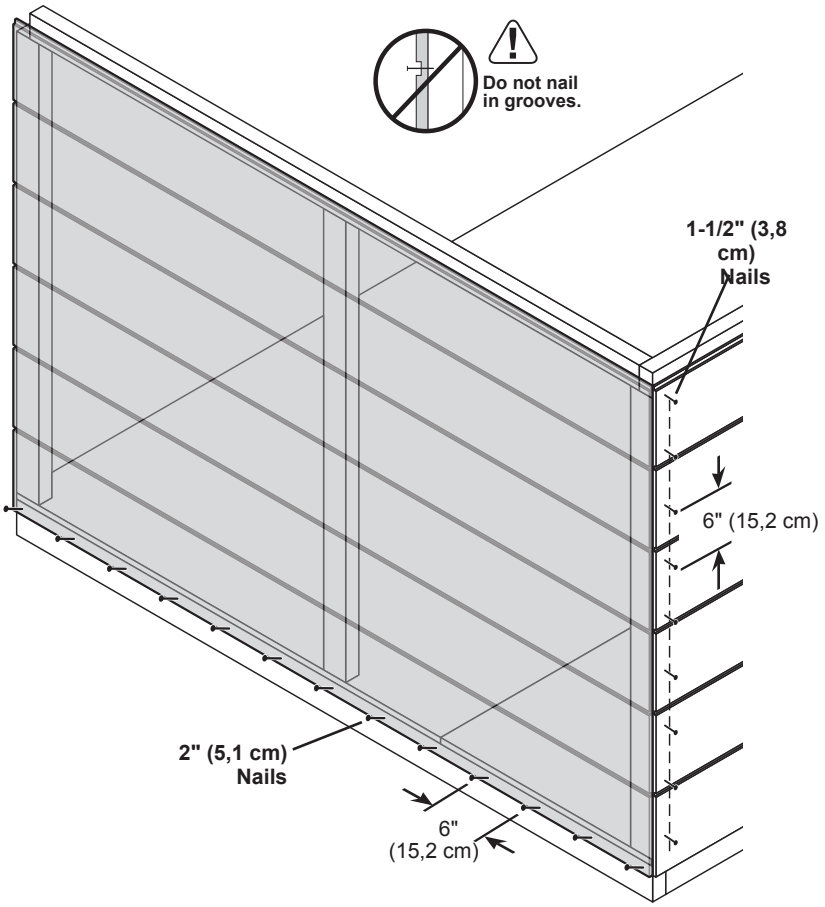

RIGHT WALL INSTALLATION

PARTS REQUIRED

x5 3" (7,6 cm)

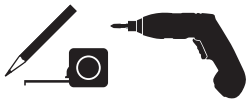

4

Working inside, secure right wall stud to back wall framing with (1) 3" screw at an angle **(Fig. B)**.

Secure wall studs with 3" screws angled into floor.

Predrill all holes with 1/8" bit.

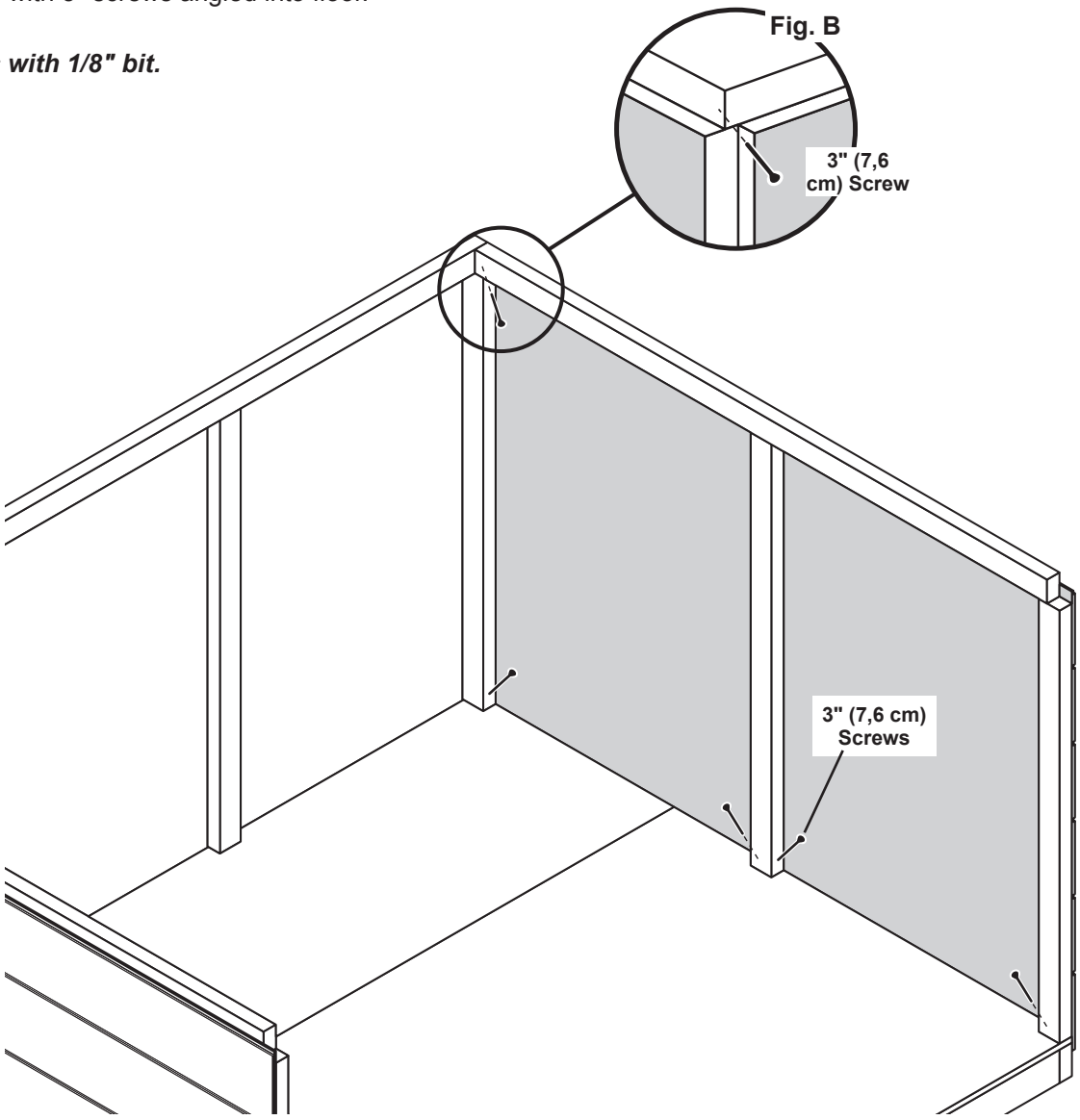

FINISH

Your right wall is now installed.

FRONT WALL INSTALLATION

PARTS REQUIRED



x2 — 2" (5,1 cm)

x10 — 2" (5,1 cm)

BEGIN

1

Center front wall on the floor.

Secure bottom of front wall panels to side wall studs with (2) 2" screws.

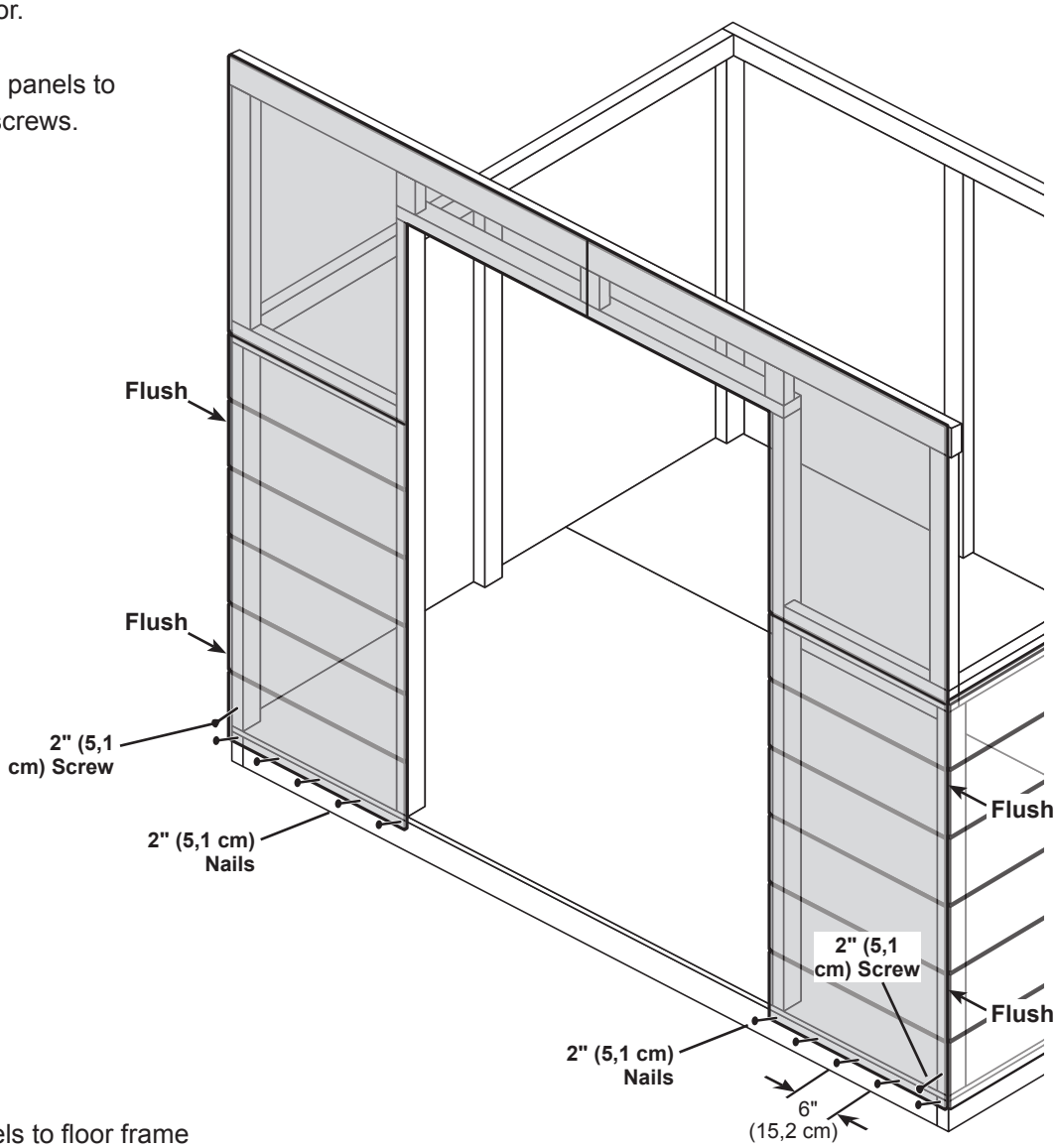

2

Secure lower edge of panels to floor frame with 2" nails spaced 6" apart.

Angle nails into floor framing.

FRONT WALL INSTALLATION

PARTS REQUIRED



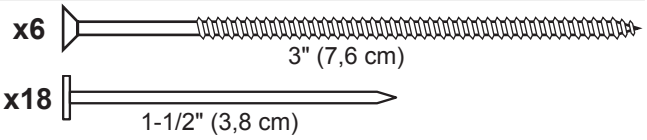

3

Secure front wall panels to side wall studs with 1-1/2" nails spaced 6" apart.

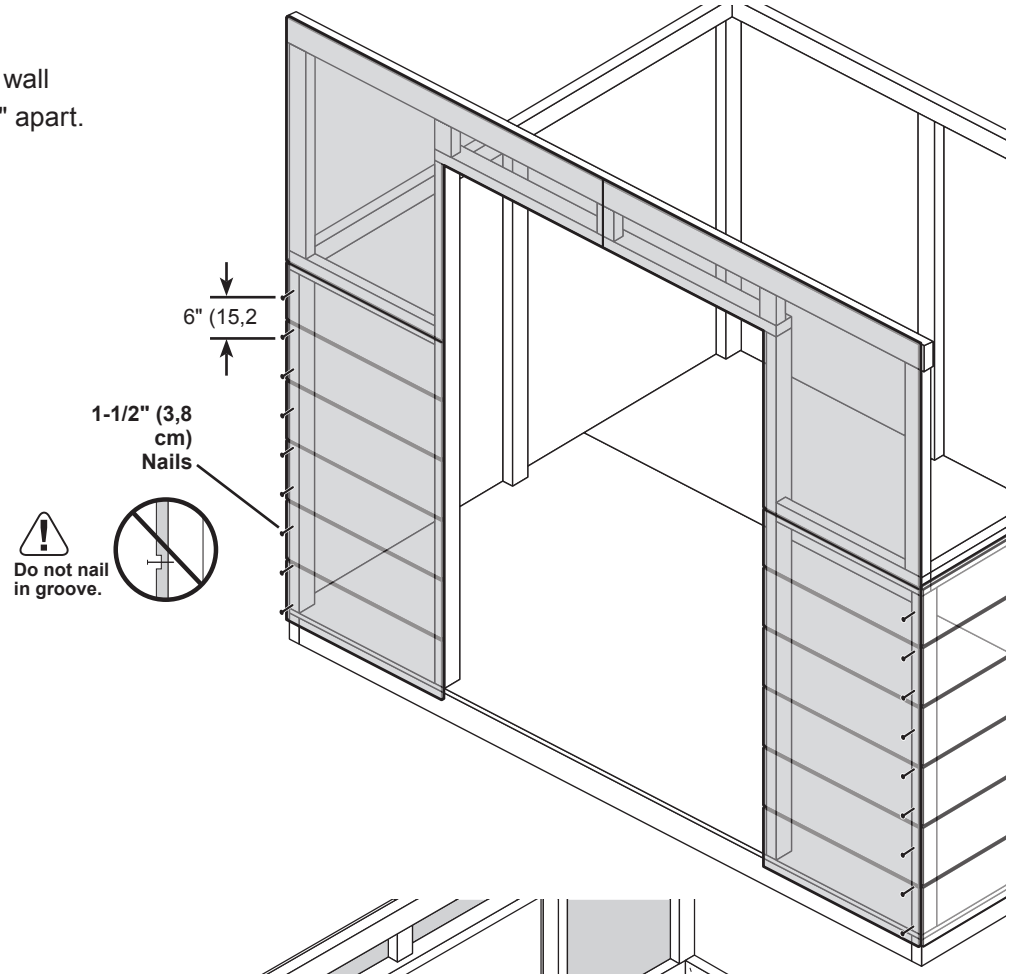

4

Working inside, secure side wall studs to front wall framing with (1) 3" screw at an angle **(Fig. B)**.

Predrill all holes with 1/8" bit.

Secure wall studs with 3" screws angled into floor.

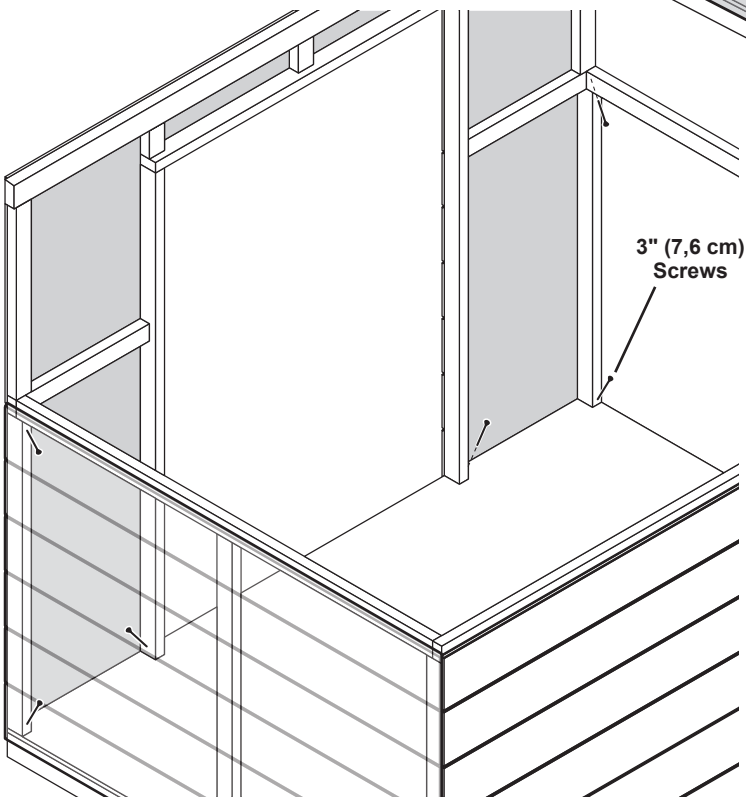

FINISH

Your front wall is now installed.

UPPER BACK WALL INSTALLATION

PARTS REQUIRED:

x1  **Pre-assembled**



x17 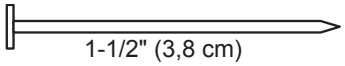
1-1/2" (3,8 cm)

BEGIN

1

Center pre-assembled upper back wall on the lower back wall.

Secure lower edge of upper back wall panel to lower back wall frame with 1-1/2" nails spaced 6" apart.

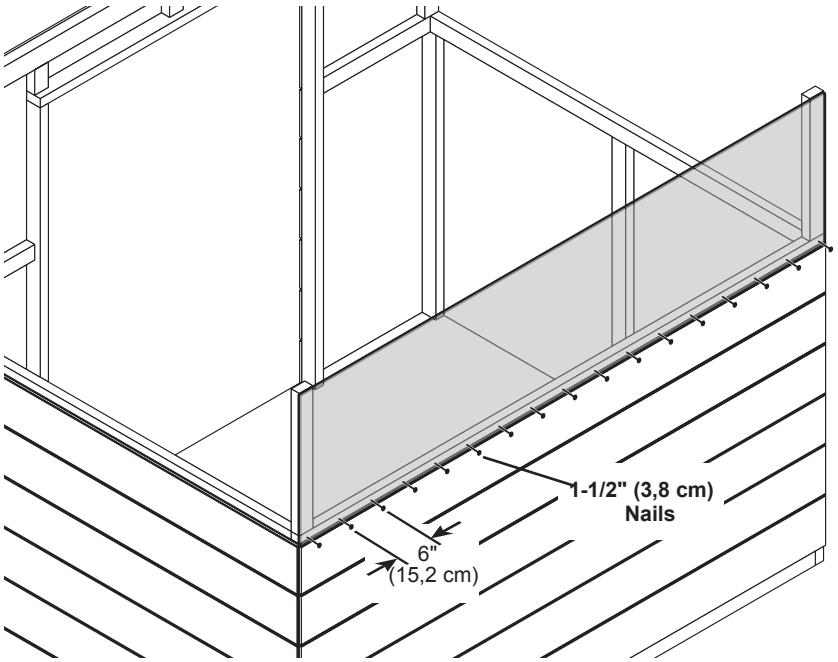

FINISH

Your back wall is now complete.

UPPER SIDE WALL PANELS

PARTS REQUIRED:

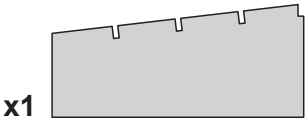

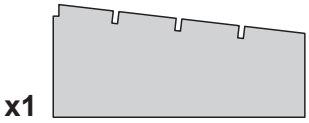



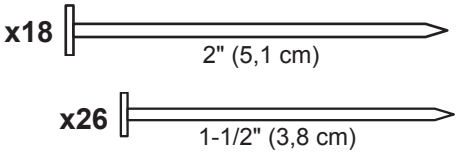

Install wall panels with the primed side facing out.

BEGIN

1

Install (2) upper side wall panels flush along front and back wall corner panels.

Secure panel to vertical framing with 2" nails spaced 6" apart.

Secure panel to side wall framing with 1-1/2" nails spaced 6" apart.

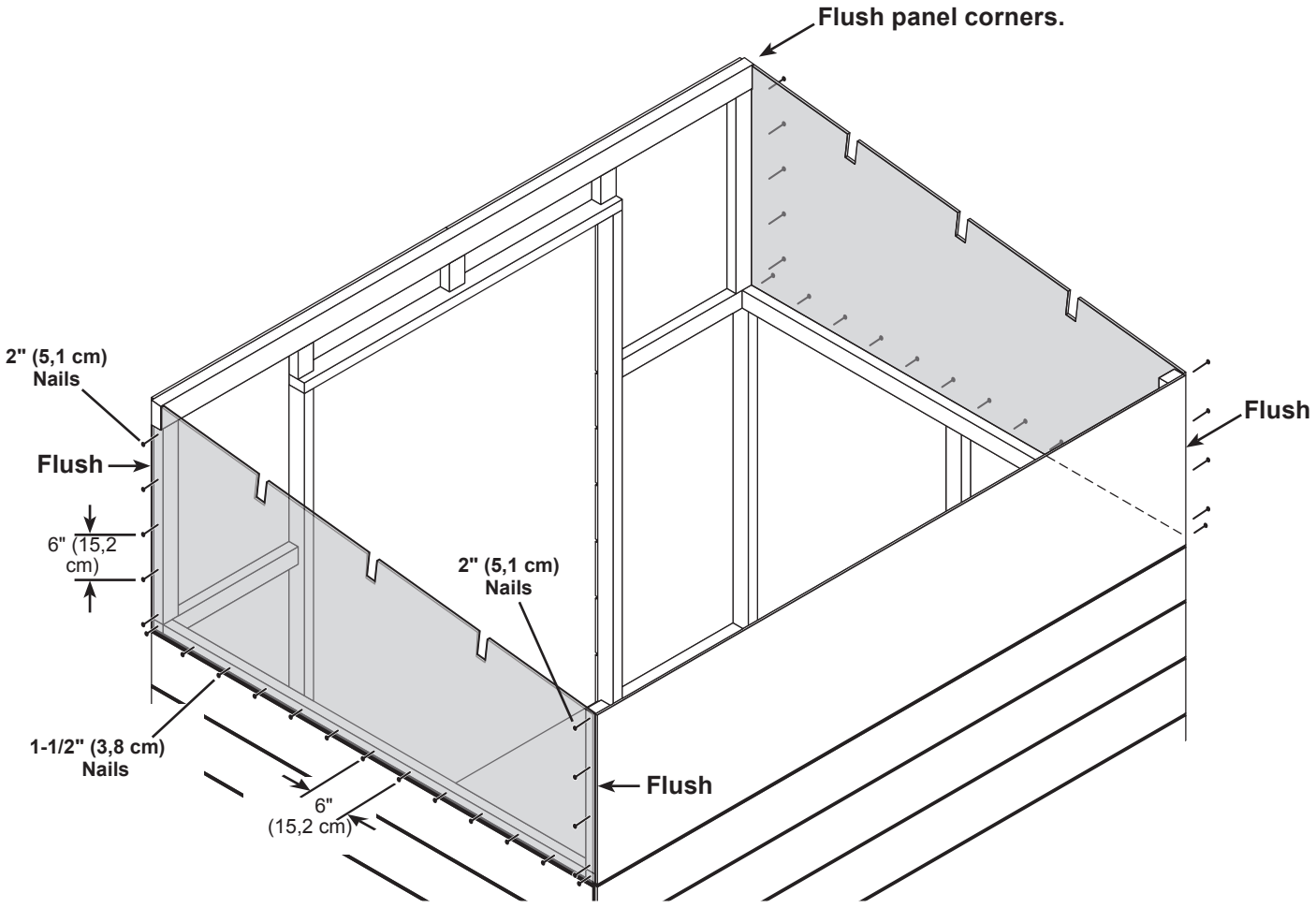

FINISH

Your upper side wall panels are now installed.

ROOF OVERHANG FRAMING

PARTS REQUIRED:

x7 1-1/2" (3,8 cm)

x2 3" (7,6 cm)

x1 TPC — Tapered Profile

2 x 4 x 96-3/4" (5,1 x 10,2 x 245,7 cm)



✓BEGIN

1

Install angled purlin **TPC** flush to side wall panels and flush across upper back panel edge.
Ensure angled profile is correct **(Fig. A)**.

Secure **TPC** to vertical framing with (2) 3" screws.

Predrill holes with 1/8" bit.

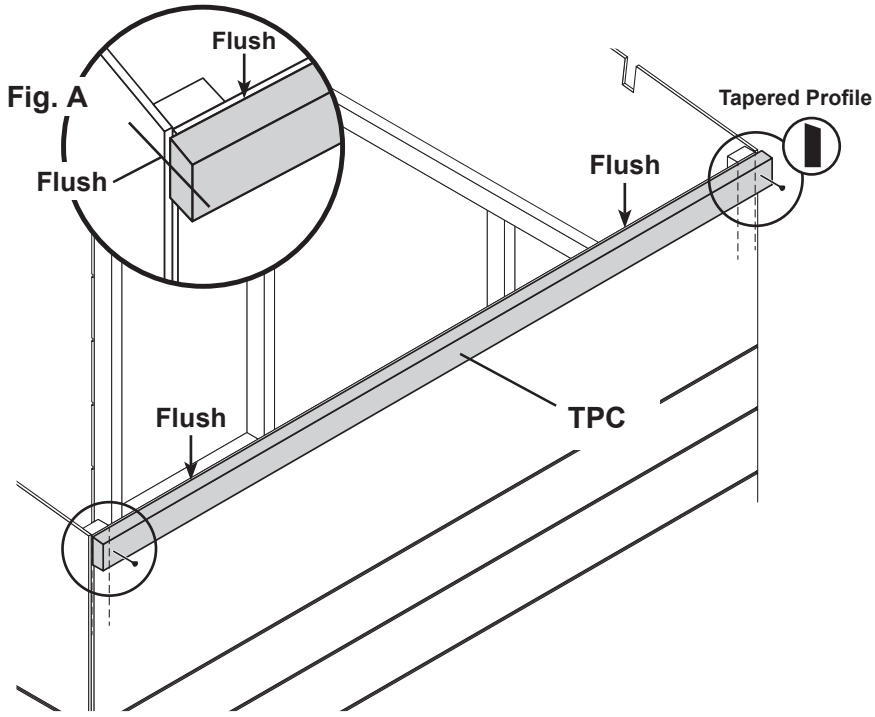

2

Working inside, secure **TPC** with 1-1/2" nails spaced evenly.

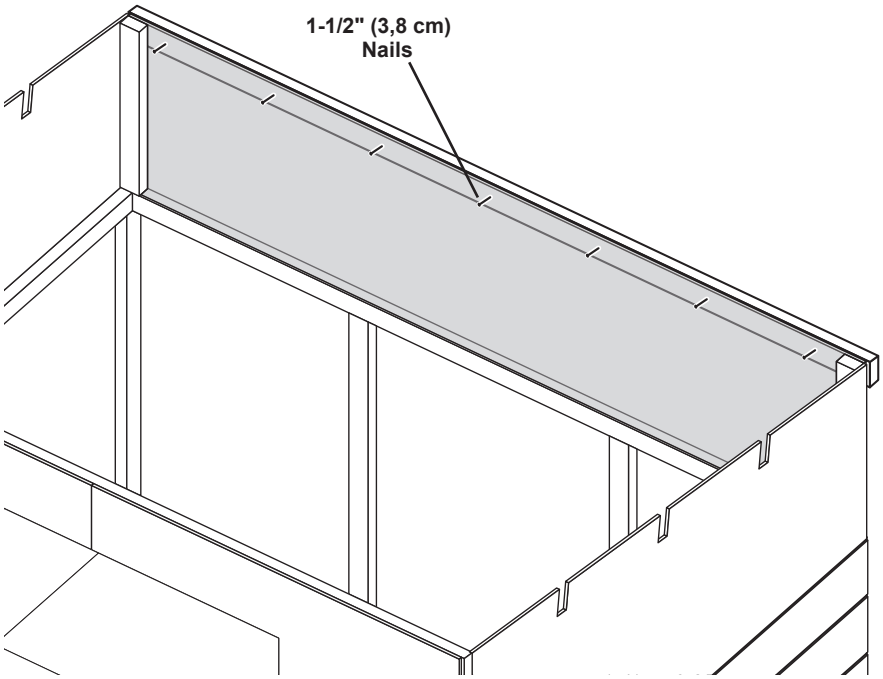

ROOF OVERHANG FRAMING

PARTS REQUIRED: **x14** 1-1/2" (3,8 cm) **x8** 3" (7,6 cm)

x2 **RPY**
2 x 4 x 80-11/16" (5,1 x 10,2 x 204,9cm)

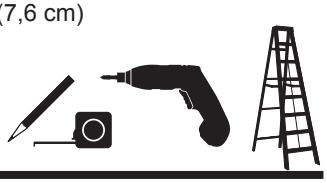

BEGIN

1

Install **RPY** flush to back tapered purlin and flush across upper side panel edge **(Fig. A)**.
Secure **RPY** to to front and back tapered purlins with 3" screws.
Predrill holes with 1/8" bit.

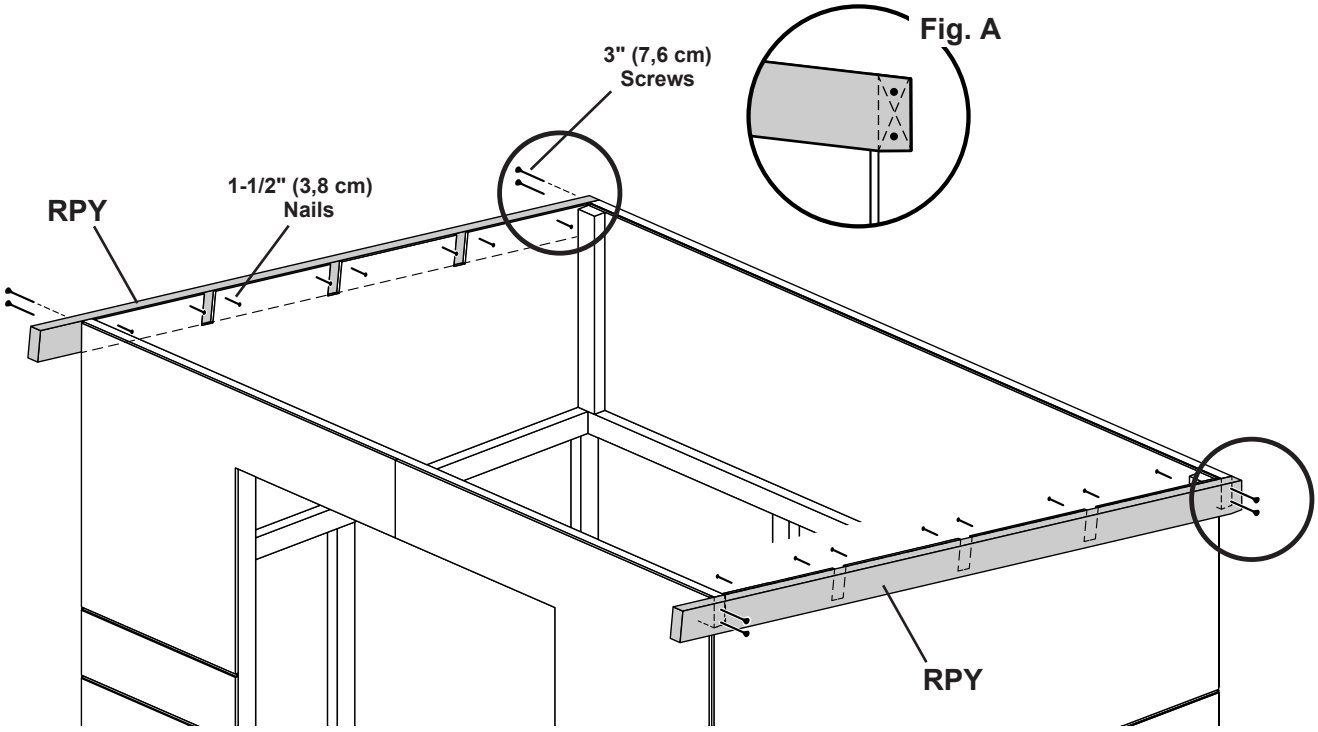

2

Working inside, secure **RPY** with 1-1/2" nails, positioned as shown.

FRONT OVERHANG UNIT

PARTS REQUIRED:

x3 AFD 2 x 4 x 4-7/16" (5,1 x 10,2 x 11,3 cm)

x1 UXA
2 x 4 x 96-3/4" (5,1 x 10,2 x 245,7 cm)

x6
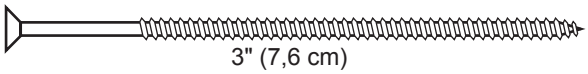
3" (7,6 cm)

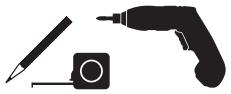

BEGIN

1

Arrange parts as shown. Measure and mark.

Secure (3) **AFD** to **UXA** with (2) 3" screws.

Predrill holes with 1/8" bit.

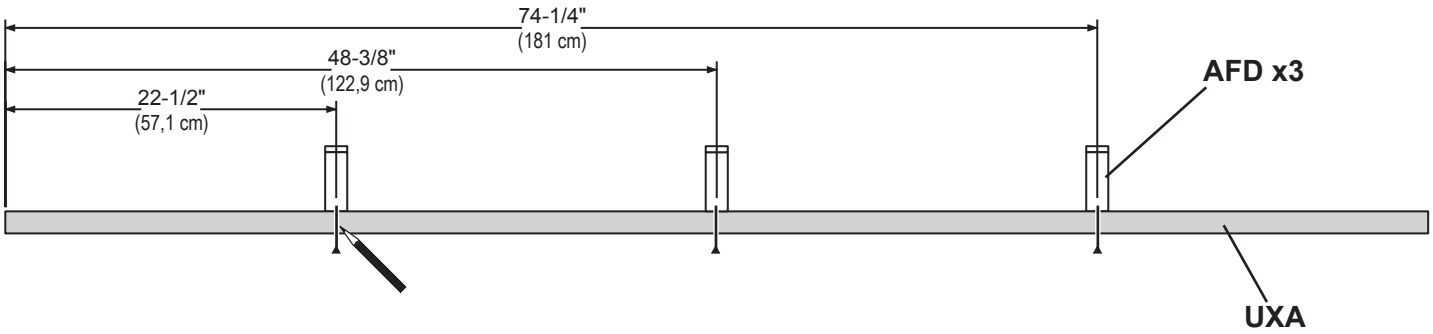

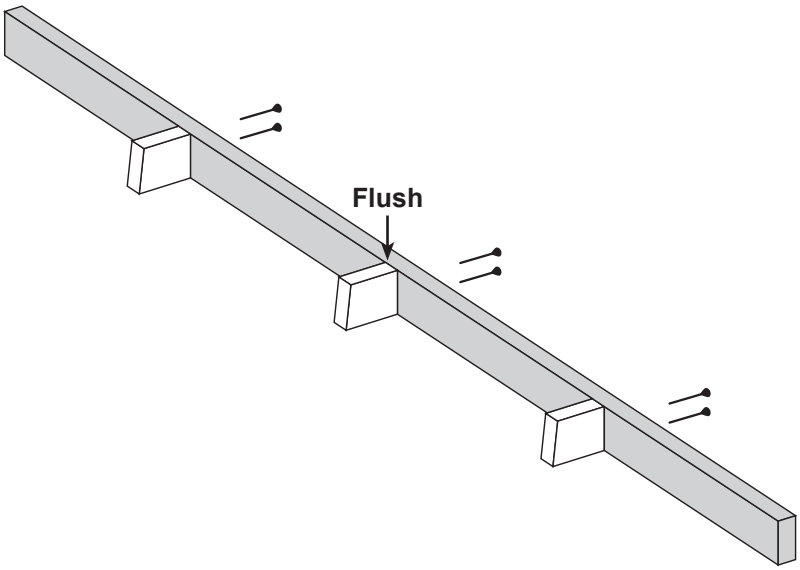

FINISH

Your front overhang unit is now assembled.

FRONT OVERHANG UNIT

PARTS REQUIRED:



Pre-assembled

x10

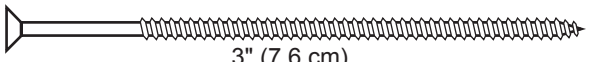

3" (7,6 cm)

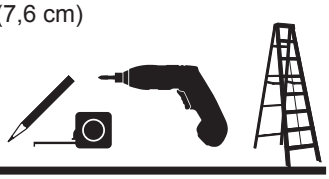

BEGIN

1

Install front overhang unit flush to side overhang framing.

Secure with (2) 3" screws at each end.

Predrill holes with 1/8" bit.

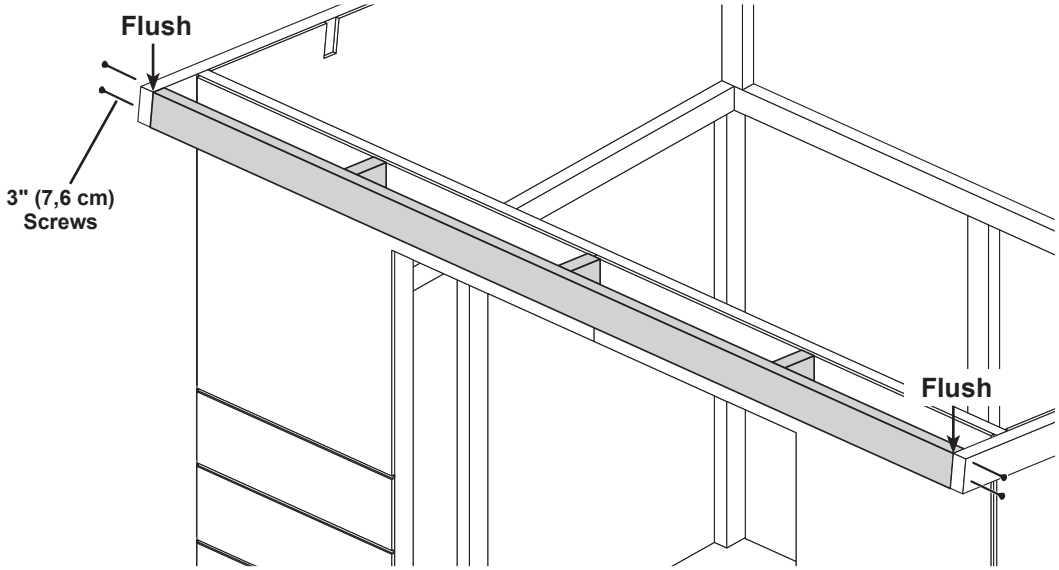

2

Working inside, secure overhang blocks to upper front wall framing.
Flush block to wall panel.

Secure each block with (2) 3" screws.

Predrill holes with 1/8" bit.

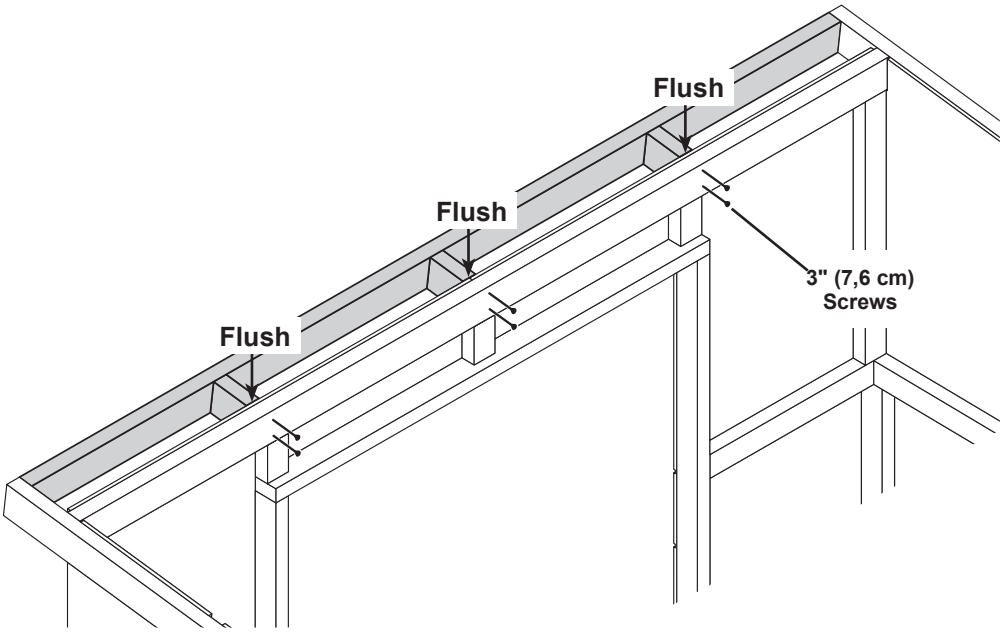

FINISH

Your overhang framing is now installed.

ROOF PURLINS

PARTS REQUIRED:

x12 

3" (7,6 cm)

x3 **UXA**

2 x 4 x 96-3/4" (5,1 x 10,2 x 245,7 cm)

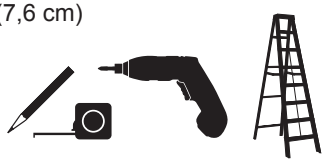

BEGIN

1

Fit (3) roof support purlins **UXA** into side wall panel notches. Flush purlins to side overhang framing. Secure with (2) 3" screws at each end.

Predrill holes with 1/8" bit.

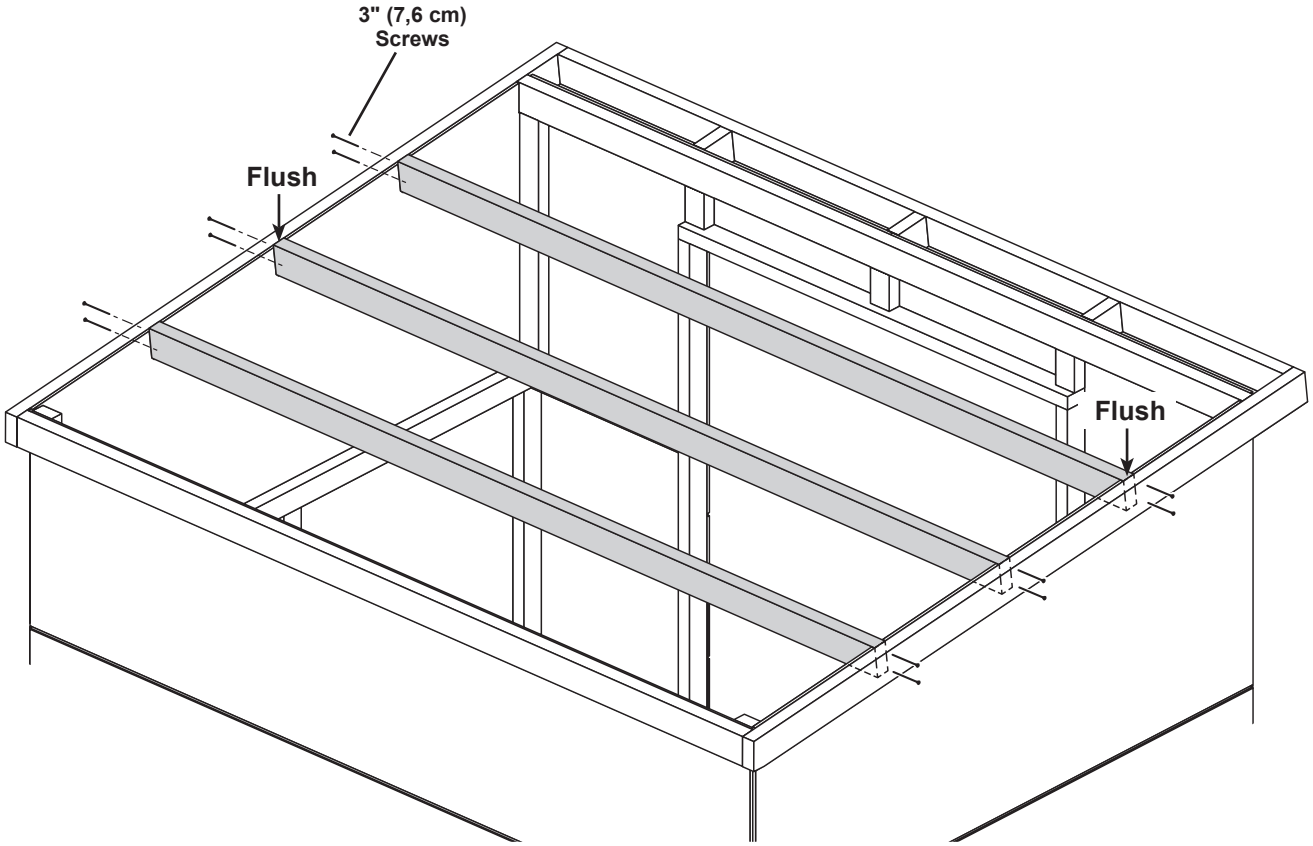

FINISH

Your roof purlins are now installed.

SOFFIT PANELS

PARTS REQUIRED:

x1 3/8" x 1-1/2" x 23-7/8" (1,0 x 3,8 x 60,6 cm)

x1 3/8" x 5-13/16" x 24" (1,0 x 14,8 x 61 cm)

x1 3/8" x 5-13/16" x 75-3/4" (1,0 x 14,8 x 192,4 cm)

x1 3/8" x 1-1/2" x 76" (1,0 x 3,8 x 193 cm)

x2 3/8" x 1-1/2" x 73-5/16" (1,0 x 3,8 x 192,4 cm)

x38 2" (5,1 cm)



Install soffit panels with the primed side facing down.

BEGIN

1 Install front **5-13/16" x 75-3/4"** and **5-13/16" x 24"** soffit panels flush to front wall panels. Start at the 3/4" measurement on the overhang block **(Fig. A)**. Flush panels at seam. Secure with 2" finishing nails, as shown. Angle nails at seam **(Fig. A)**.

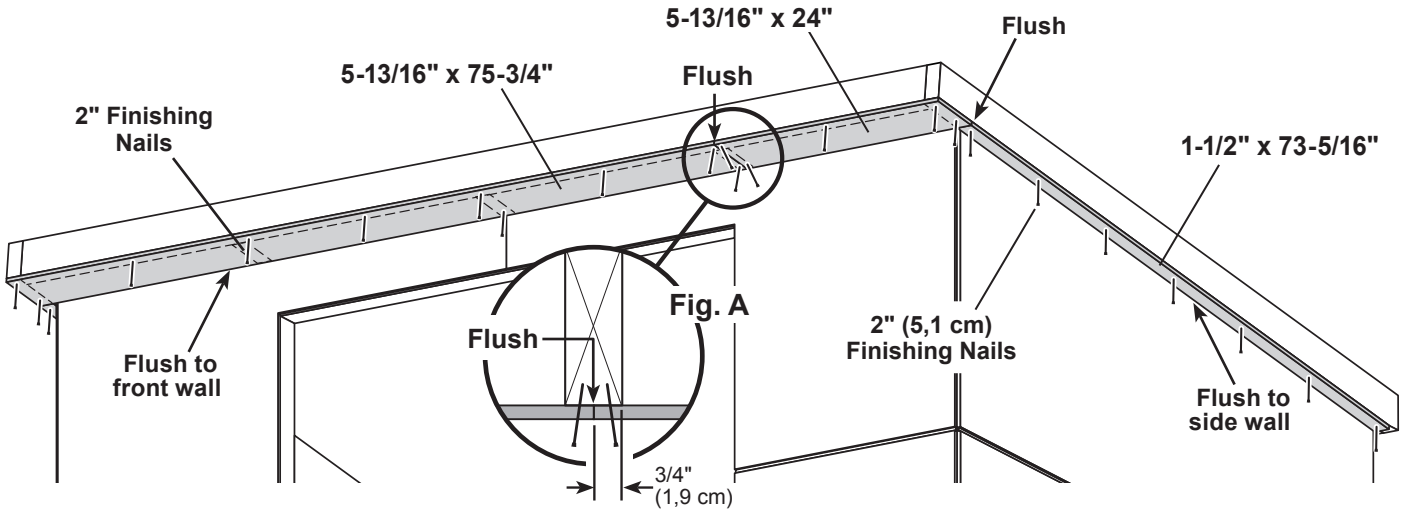

2 Install (2) **1-1/2"x 73-5/16"** side soffit panels (both sides) flush to installed front soffit panels and flush to side wall panels.
Secure with 2" finishing nails, spaced evenly.

3 Install **1-1/2" x 76"** and **1-1/2" x 23-7/8"** back soffit panels flush to back wall panels and flush to side soffit panels. Install the longer **76"** panel fitrst. Flush panels at seam.
Secure with 2" finishing nails, as shown.

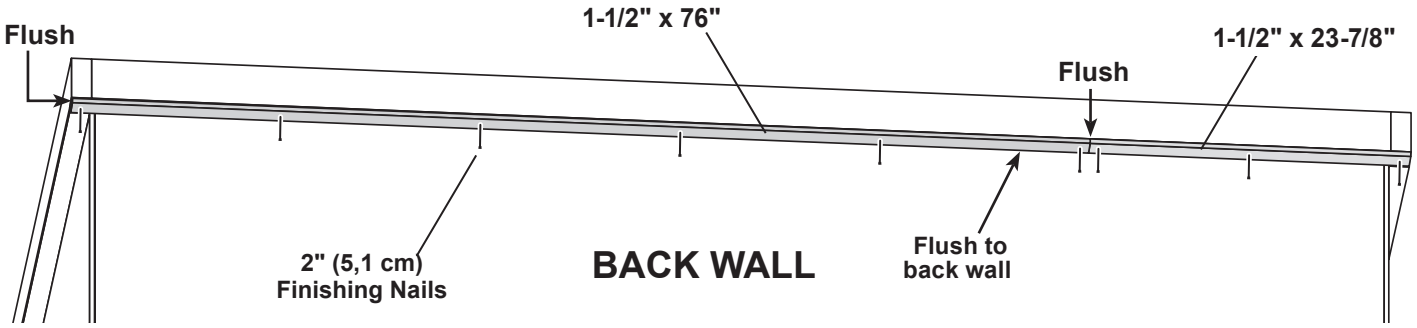

FINISH

Your soffit panels are now installed.

FASCIA TRIM

PARTS REQUIRED:

x2 3/8" x 4-7/8" x 72" (1,0 x 12,4 x 182,9 cm)

x1 *Right* 3/8" x 4-7/8" x 80-7/8" (1,0 x 12,4 x 205,4 cm)

x1 *Left* 3/8" x 4-7/8" x 80-7/8" (1,0 x 12,4 x 205,4 cm)

x2 3/8" x 4-7/8" x 28-1/2" (1,0 x 12,4 x 72,4 cm)

x52 2" (5,1 cm)



Install trim with the primed side facing out.

BEGIN

1 Install right side **4-7/8" x 72"** fascia board flush to front edge of overhang frame and flush to top of wall panels. ***Ensure the angled cut is to the back***. Secure with 2" finishing nails, evenly spaced.

Repeat to install the left facia.

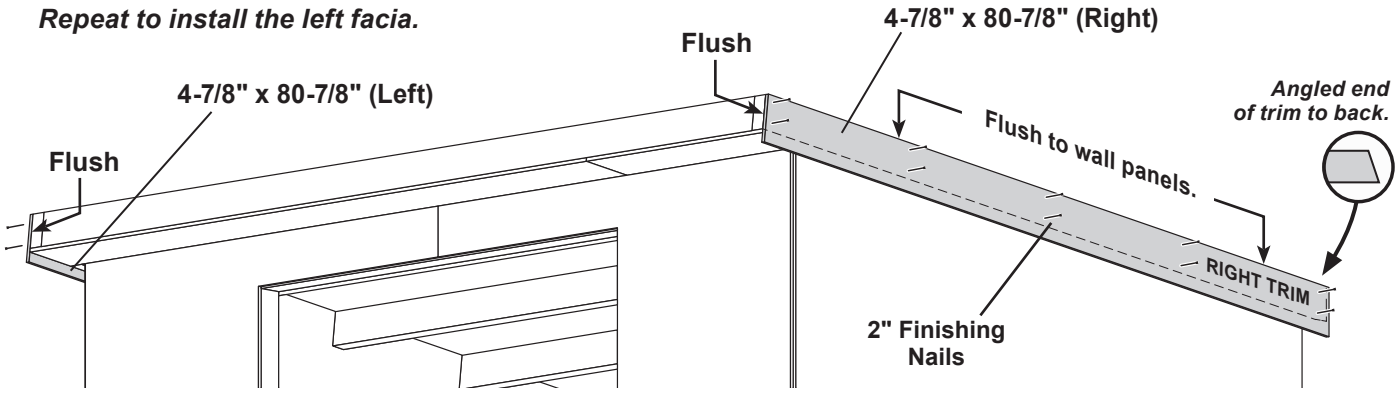

2 Install **4-7/8" x 72"** and **4-7/8" x 28-1/2"** front fascia boards flush to side fascia and flush to top of front overhang framing.
Secure with 2" finishing nails, spaced evenly.

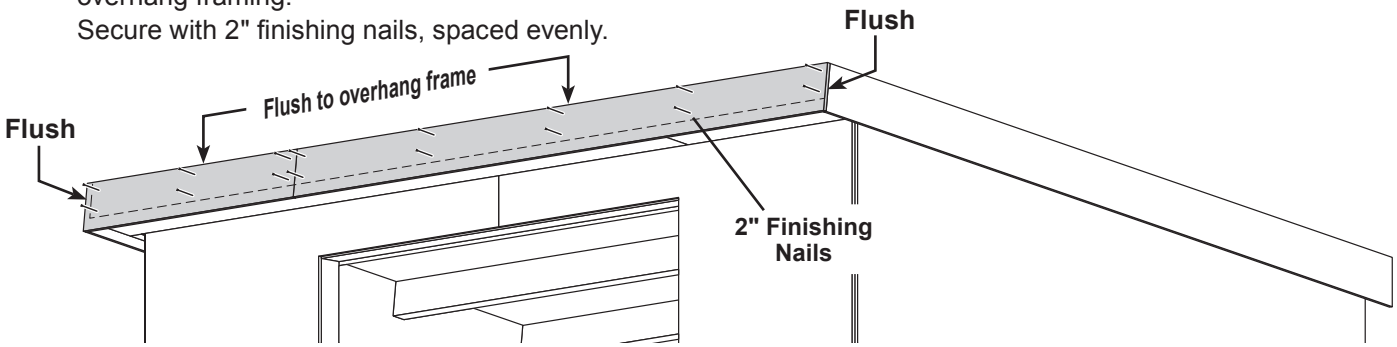

3 Install **4-7/8" x 72"** and **4-7/8" x 28-1/2"** back fascia boards flush to side fascia and flush to top of back roof overhang framing.
Secure with 2" finishing nails, spaced evenly.

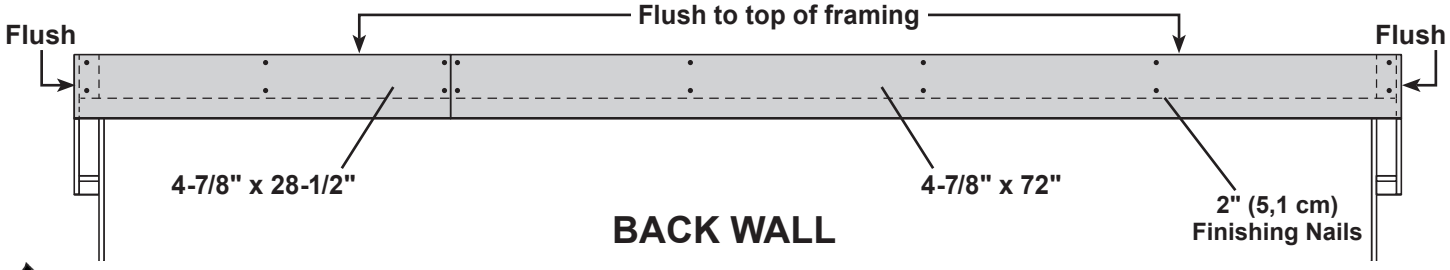

FINISH

Your fascia trim boards are now installed.

FRONT & BACK WALL TRIM

PARTS REQUIRED:

x2 3/8" x 1-3/4" x 67-1/8" (1,0 x 4,4 x 170,5 cm)

x2 3/8" x 1-3/4" x 75-11/16" (1,0 x 4,4 x 192,2 cm)

x26 2" (5,1 cm)

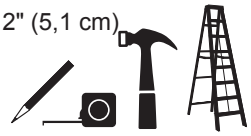

Install trim with the primed side facing out.

2

Install (2) **75-11/16"** front corner trim flush to soffit and flush to installed corner trim.

Secure with 2" finishing nails spaced evenly.

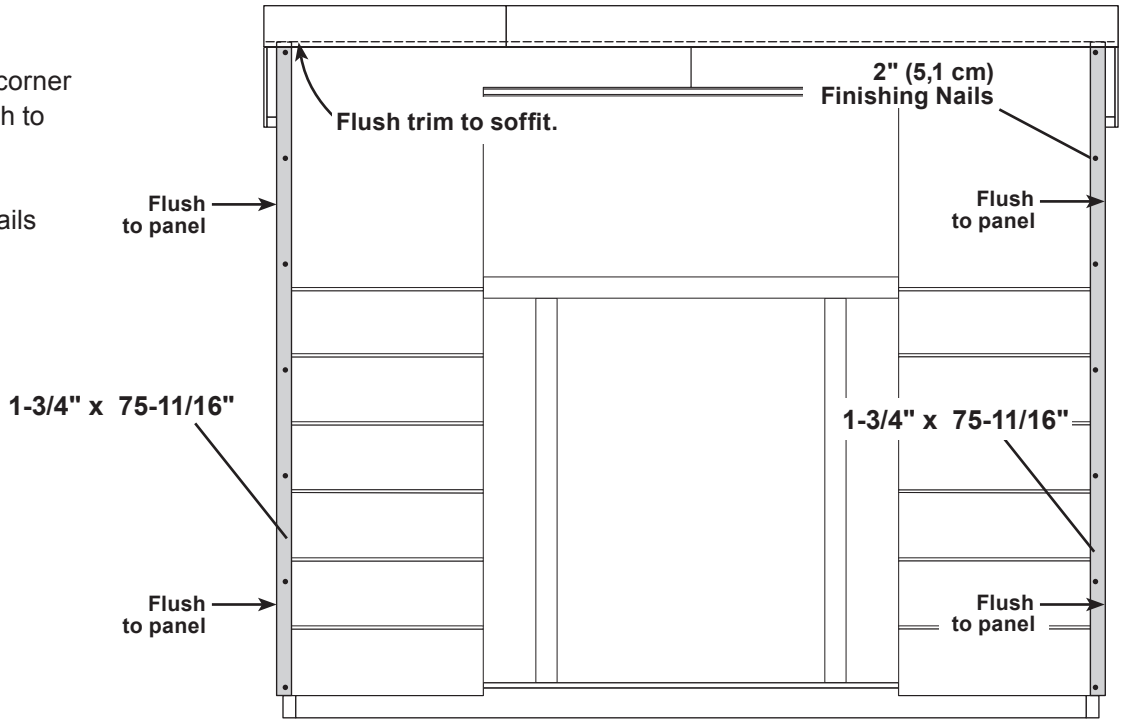

3

Install (2) **67-1/8"** back corner trim flush to soffit and flush to installed corner trim.

Secure with 2" finishing nails spaced evenly.

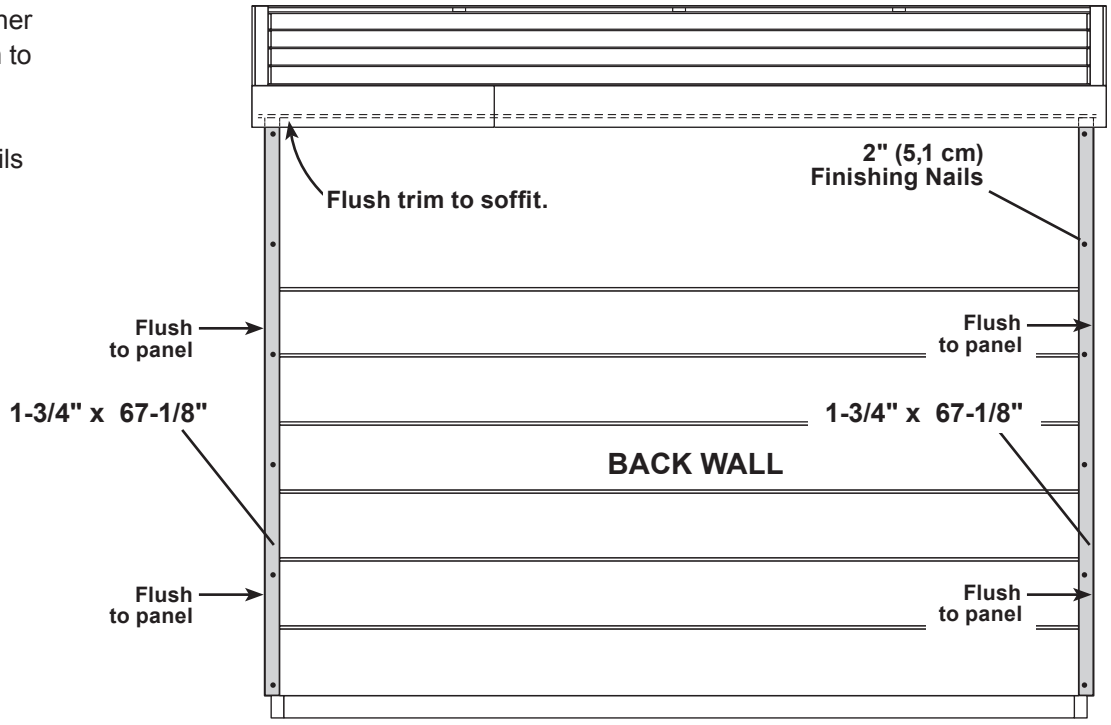

FINISH

Your corner trim is now installed.

DOORS

PARTS REQUIRED:

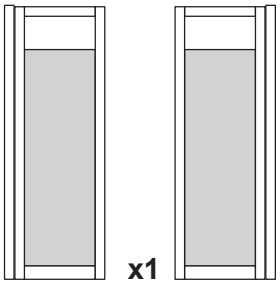

x1 x1

x1 IFA
3/8" x 3-1/2" x 10-3/4" (1,0 x 8,9 x 27,3 cm)

x1 OO
69" (175,3 cm) Door Stiffener

x4
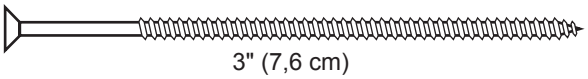
3" (7,6 cm)

x2

1-1/4" (3,2 cm)

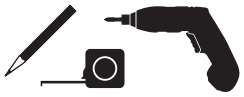

BEGIN

1 Arrange parts as shown, on flat surface. **Ensure that the 3/8" offset is to top. Look for red (right) and green (left) on hinge board.**

Attach temporary supports **OO** and **IFA** as shown.

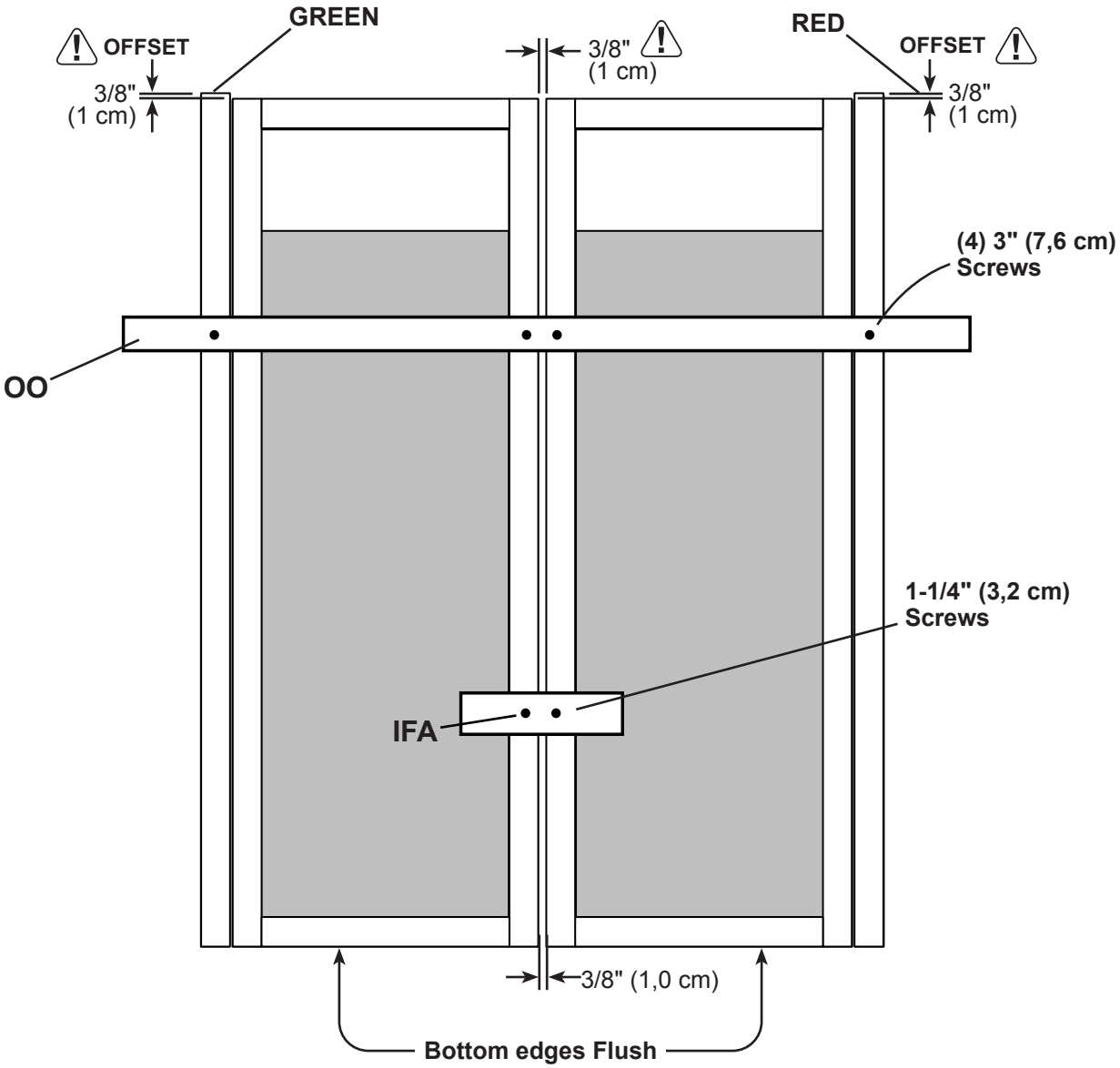

DOORS

PARTS REQUIRED:

x12 — 3" (7,6 cm)

x1 **OO** *Temporary Support* — 69" (175,3 cm) Door Stiffener

x1 *Temporary Support* — 3/8" x 1-3/4" x 68-3/16" (1,0 x 4,4 x 173,2 cm)

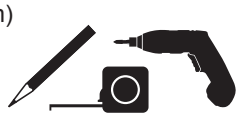

2 Install **OO** and (1) **3/8" x 1-3/4" trim piece** flush under wall panels. Secure **OO** to floor frame with (2) 3" screws **(Fig. A)**.

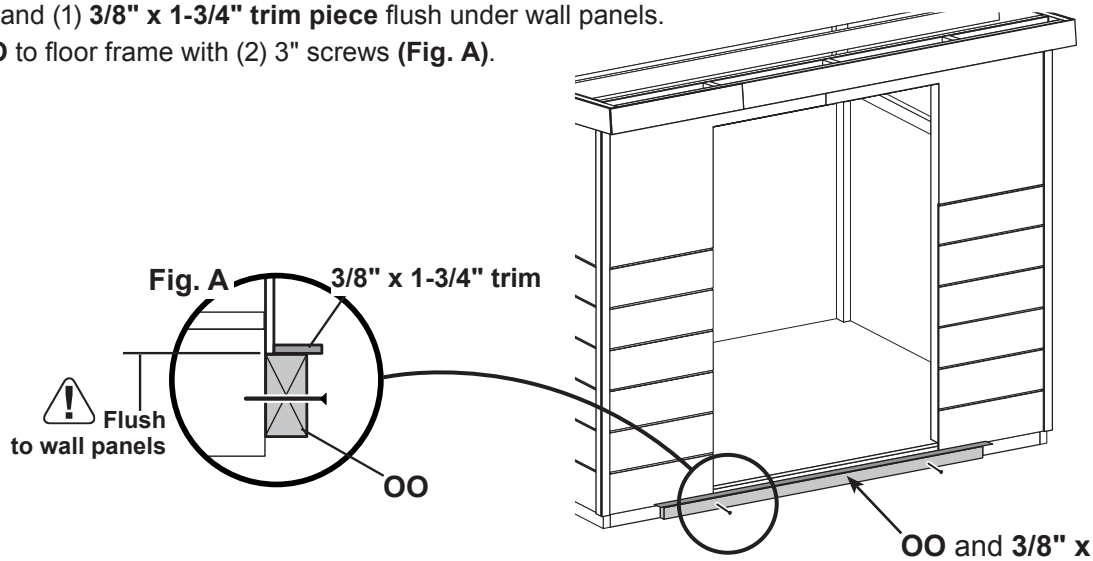

3 Center doors on the panel seam, as shown **(Fig. B)**. Secure hinge boards to door studs with (10) 3" screws.

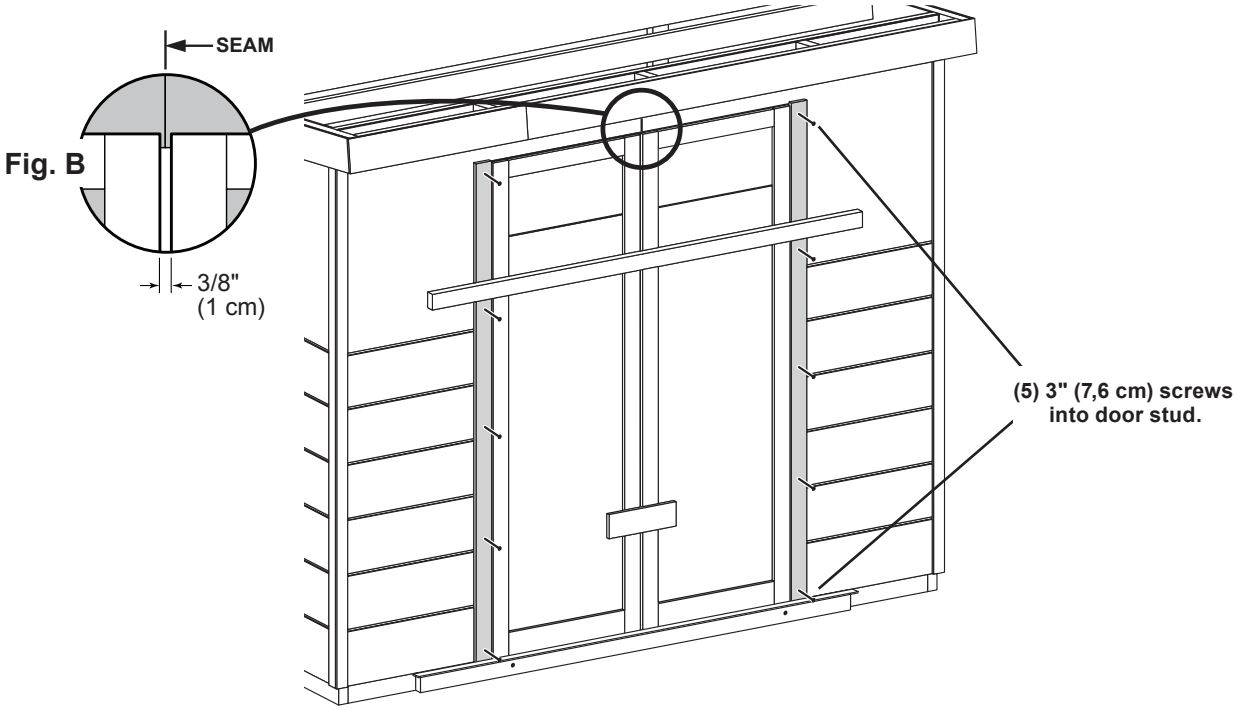

Remove temporary supports and ensure that the doors open and close properly.

FINISH

You have finished installing your doors.

DOOR TRIM

PARTS REQUIRED:

x1 IFA
3/8" x 3-1/2" x 10-3/4" (1,0 x 8,9 x 27,3 cm)

x8 RIC ***or: x4***
3/8" x 3-1/2" x 18-5/8" (1,0 x 8,9 x 47,3 cm)

x56
3/4" (1,9 cm)

This page shows Option 1. You have 3 options for door trim, see Fig. C below, and page 41.

BEGIN

1. Install upper door rail **RIC** flush to bottom of window opening**.**
Secure with 3/4" screws from inside of doors.

2. Starting at bottom of doors, install door rails **RIC** using **IFA** as a spacer for ensuring a 10-3/4" measurement between rails.
Secure with 3/4" screws from inside of doors **(Fig. B)**.

3. Reinforce the door trim with 3/4" screws through door panel into trim **(Fig. A)**. Locate screws evenly spaced, as shown **(Fig. B)**.

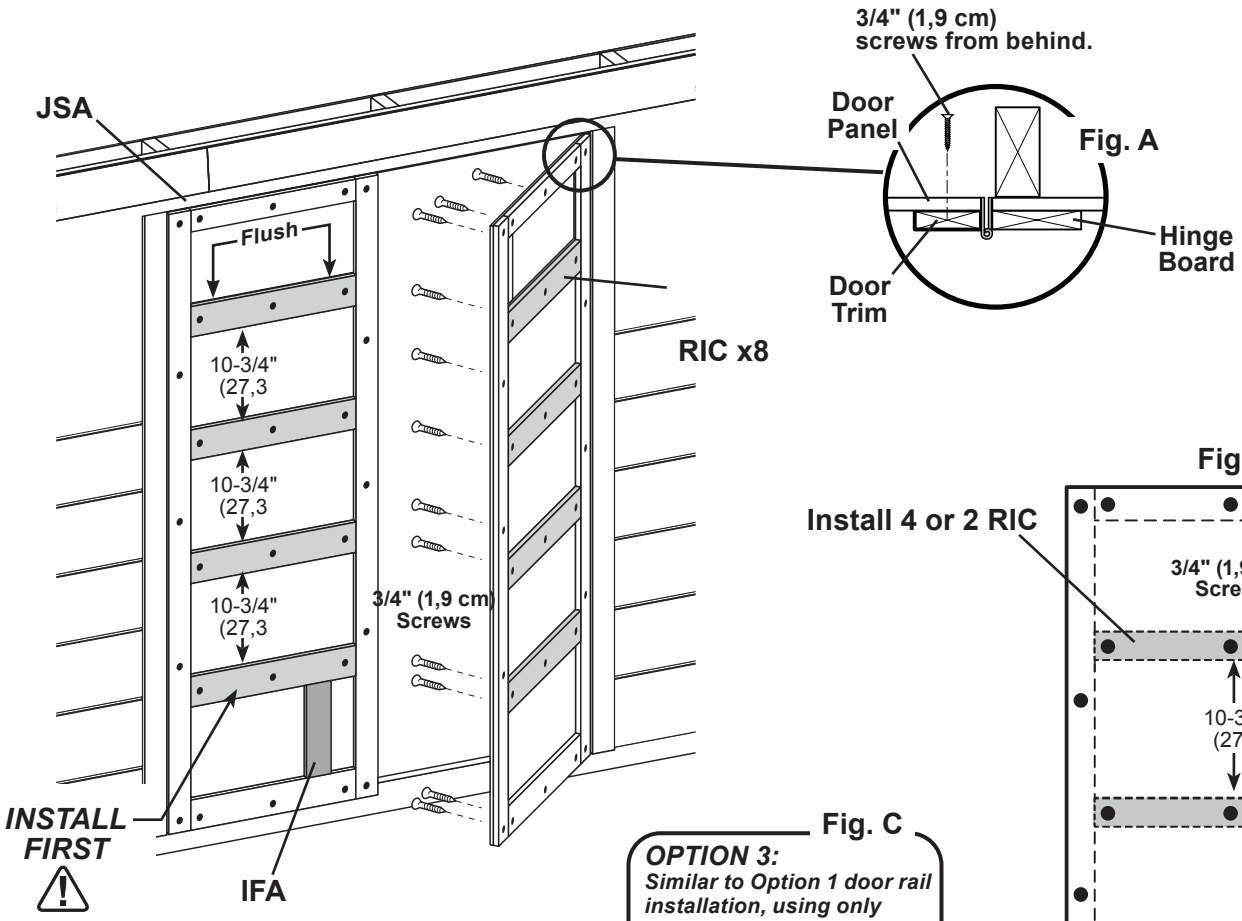

Fig. B

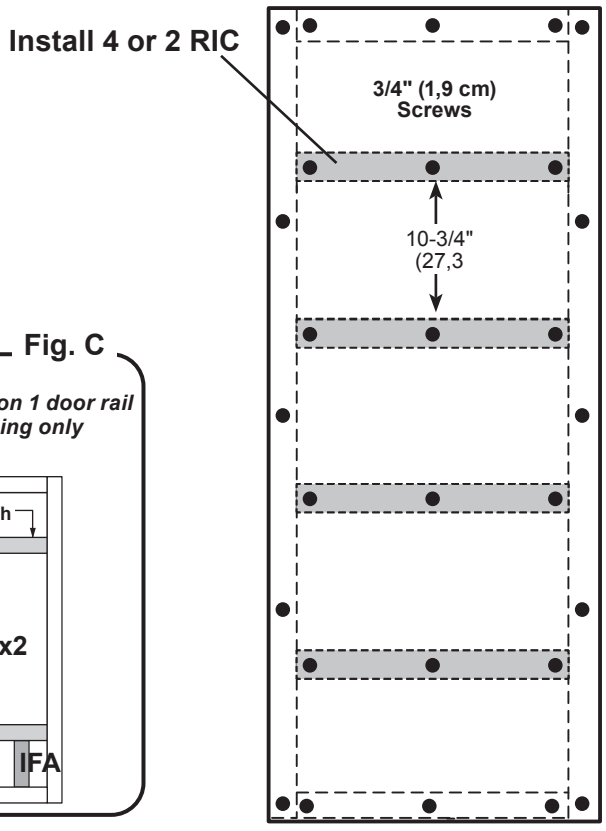

Fig. C

OPTION 3:
Similar to Option 1 door rail installation, using only two door rails.

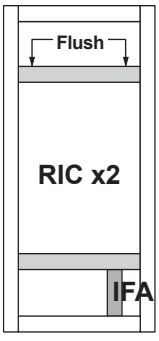

FINISH

Your door trim is now installed.

DOOR TRIM

PARTS REQUIRED:

x2 RIC
3/8" x 3-1/2" x 18-5/8" (1,0 x 8,9 x 47,3 cm)

x1 AIB
3/8" x 3-1/2" x 55-9/16" (1,0 x 8,9 x 141,1 cm)

x1 AIC
3/8" x 3-1/2" x 55-9/16" (1,0 x 8,9 x 141,1 cm)

x46
3/4" (1,9 cm)



BEGIN

1. Install upper door rail **RIC** flush to top of window opening**.** Secure with 3/4" screws from inside of doors.

2. Install door trim **AIC** and **AIB** as shown> Secure with 3/4" screws from inside of doors.

3. Reinforce the door trim with 3/4" screws through door panel into trim **(Fig. A)**. Locate screws evenly spaced, as shown **(Fig. B)**.

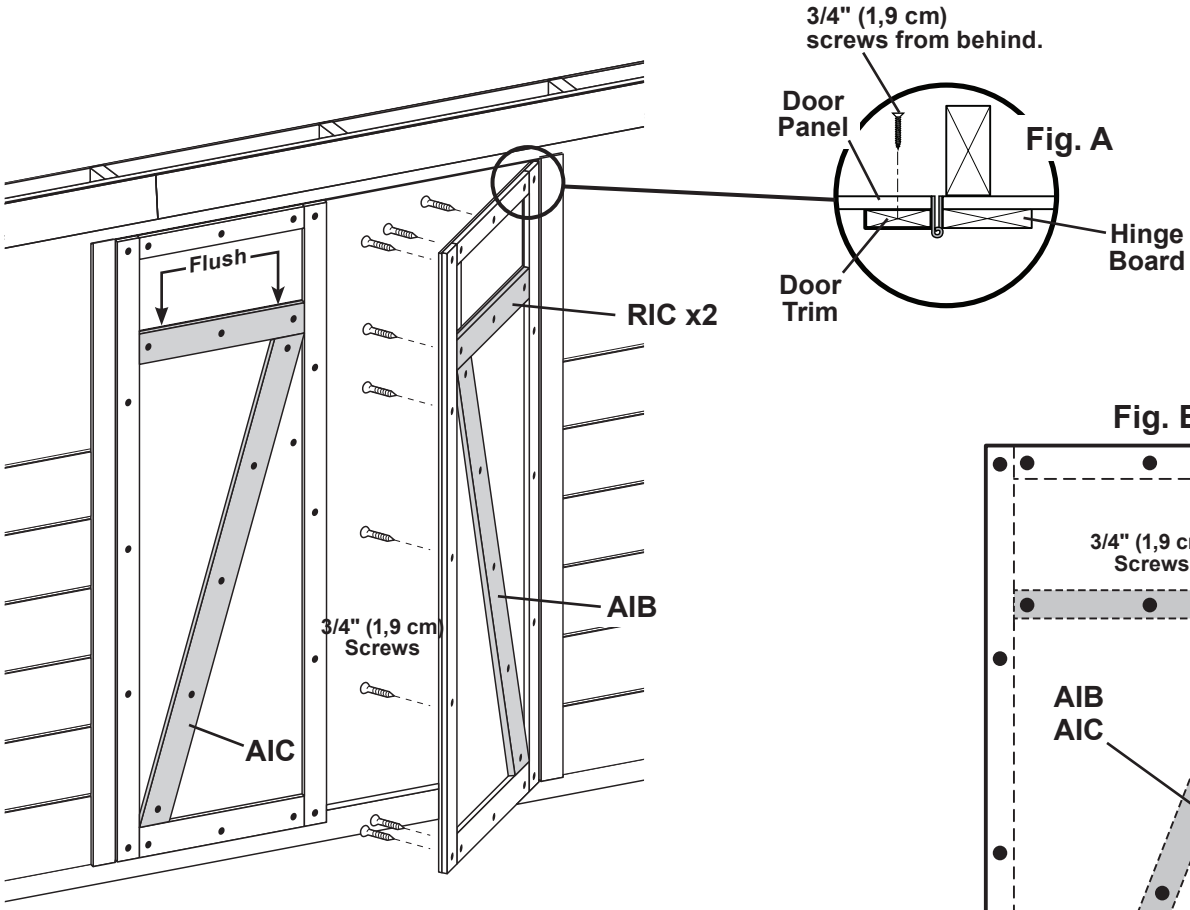

Fig. B

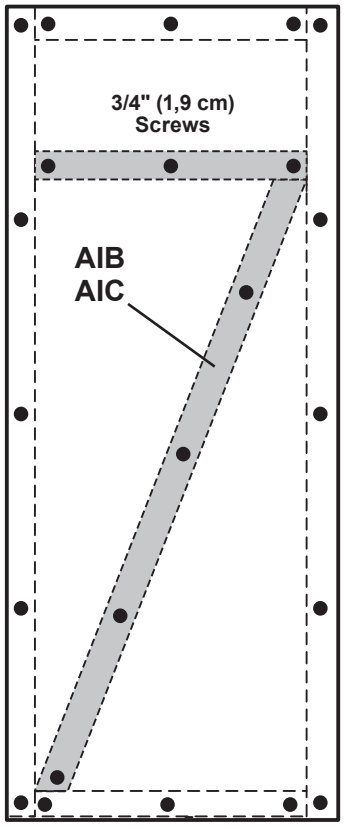

FINISH

Your door trim is now installed.

OVER DOOR TRIM and THRESHOLD

PARTS REQUIRED:

x1 **JSA**
3/8" x 1-1/2" x 54-9/16" (1,0 x 3,8 x 138,6 cm)

x1
48" Metal Threshold
3/4" (1,9 cm) **x9**
Bagged separately / special coating

x5
2" (5,1 cm)

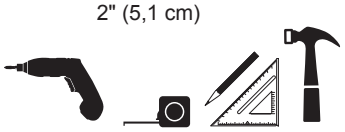

BEGIN

1 Center over door trim **JSA** over doors.
Secure with (4) 2" finishing nails into framing.

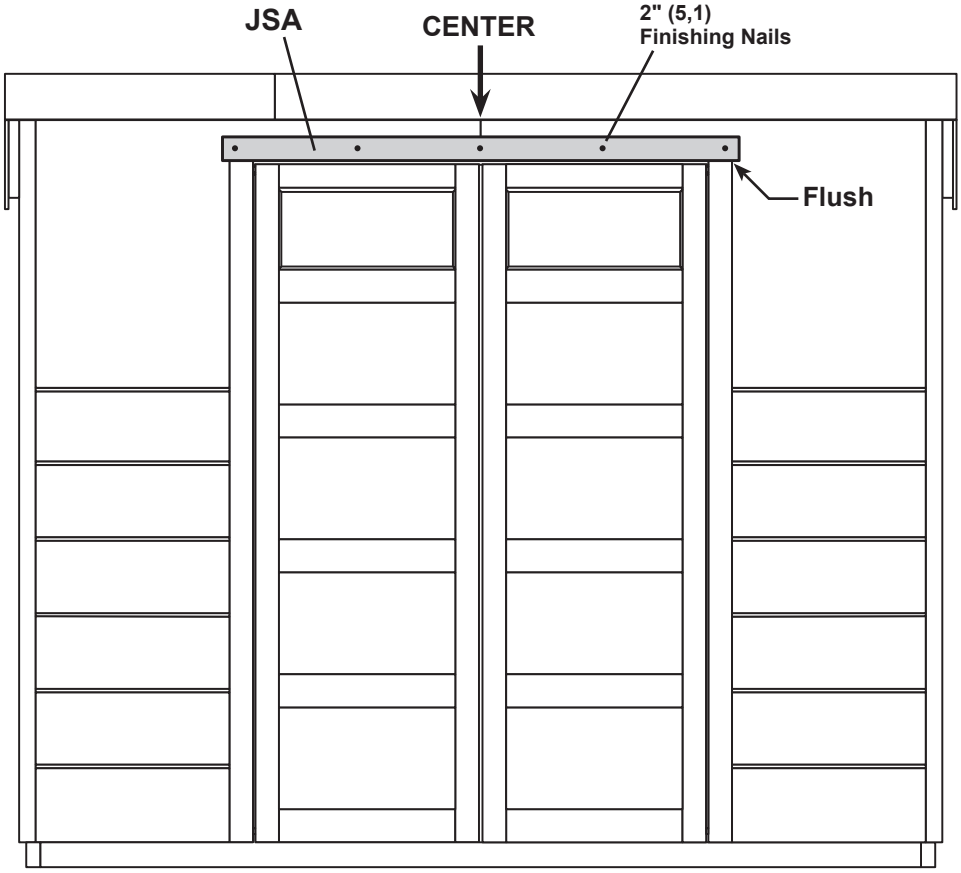

2 Center metal threshold between doors and secure with (9) 3/4" special coating screws into floor.

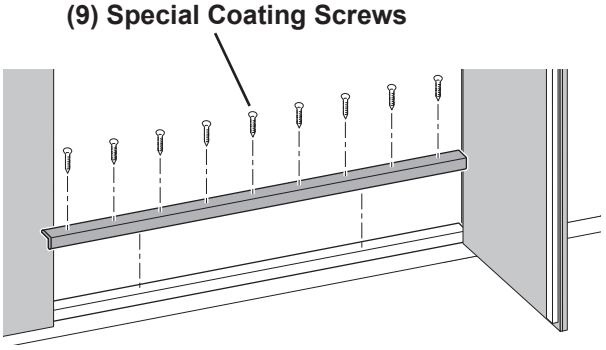

FINISH

Your over door trim and threshold are now installed.

DOOR TRANSOM WINDOWS

PARTS REQUIRED:

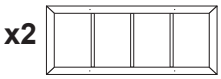

Transom Window

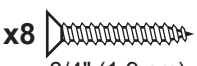

3/4" (1,9 cm)

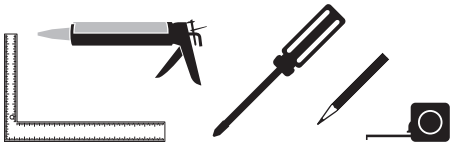

BEGIN

1 Apply high quality exterior-grade caulk behind frame near edge before installing to seal window.

You must caulk completely around window frame and all exposed door panel edges and trim to validate your warranty.
Use a paintable exterior rated caulk.

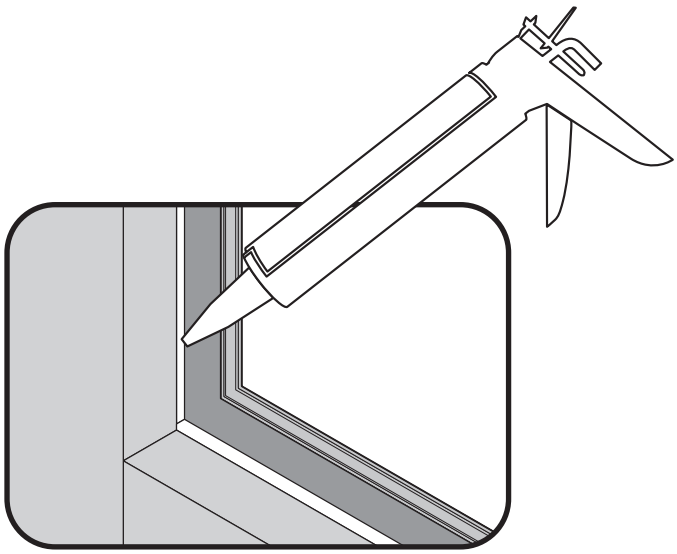

FRONT SIDE VIEW

2 Install window from the back side of the door.
Center the window looking at the front of the door,
make sure there is an even reveal along the trim of the door and the window.

Use 3/4" screws to secure the window.

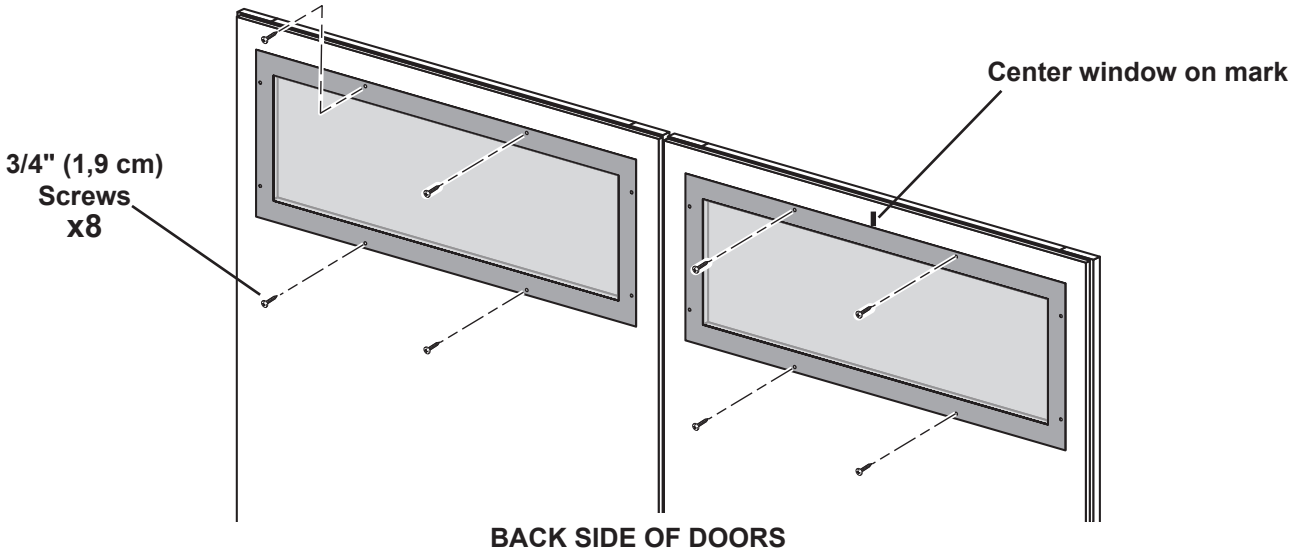

BACK SIDE OF DOORS

FINISH

Your transom windows are installed.

DOOR STIFFENERS

PARTS REQUIRED:

x2 **OO**
69" (175,3 cm) Door Stiffener

x14
2" (5,1 cm)



BEGIN

1 Center (2) door stiffeners **OO** vertically on each door, as shown **(Fig. A, Fig. B)**.
Secure with (7) 2" screws through outside trim into **OO (Fig. B)**.

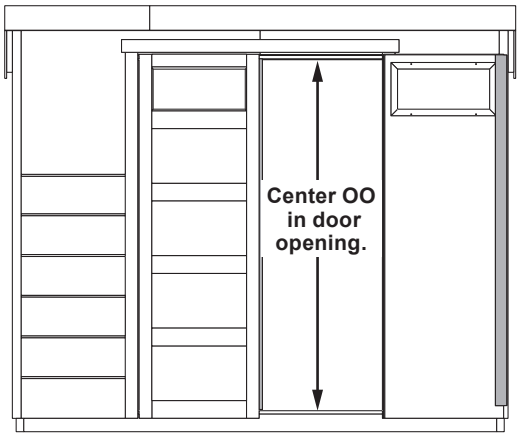

Fig. A

OO x2

Fig. B

IT IS IMPORTANT TO HOLD THESE DIMENSIONS

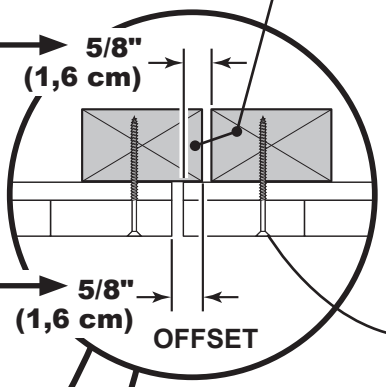

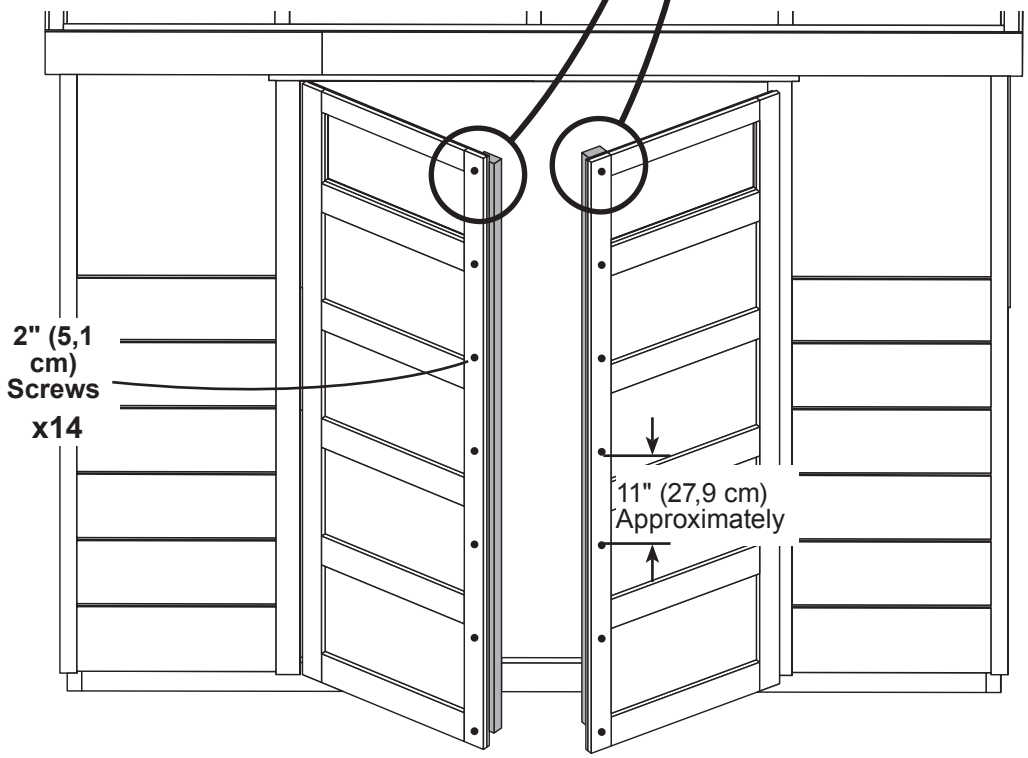

FINISH

Your door stiffeners are now installed.

DOOR HARDWARE

PARTS REQUIRED:

x1

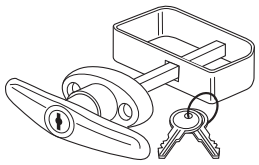

x2

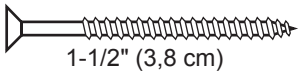

1-1/2" (3,8 cm)

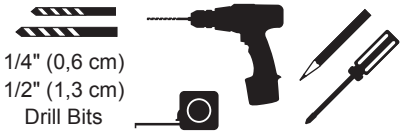

1/4" (0,6 cm)
1/2" (1,3 cm)
Drill Bits

BEGIN

1 Measure and mark position on right door as shown.

Pre-drill 1/4" hole at mark. Finish hole using 1/2" drill bit.

2 Position hardware in hole and secure with screws as shown.

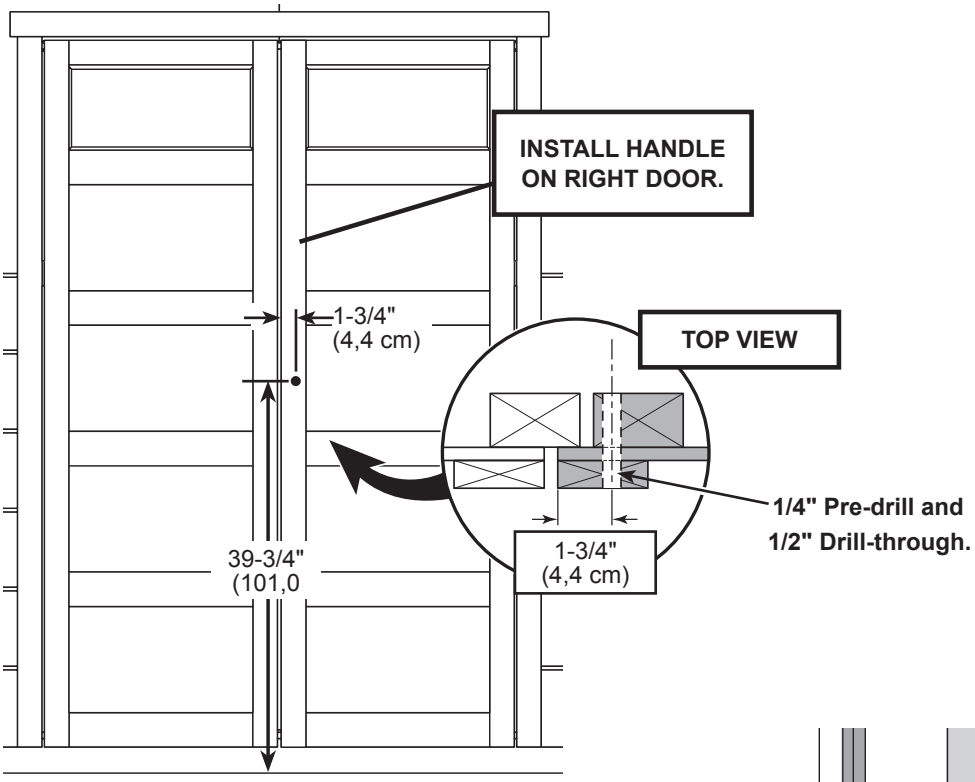

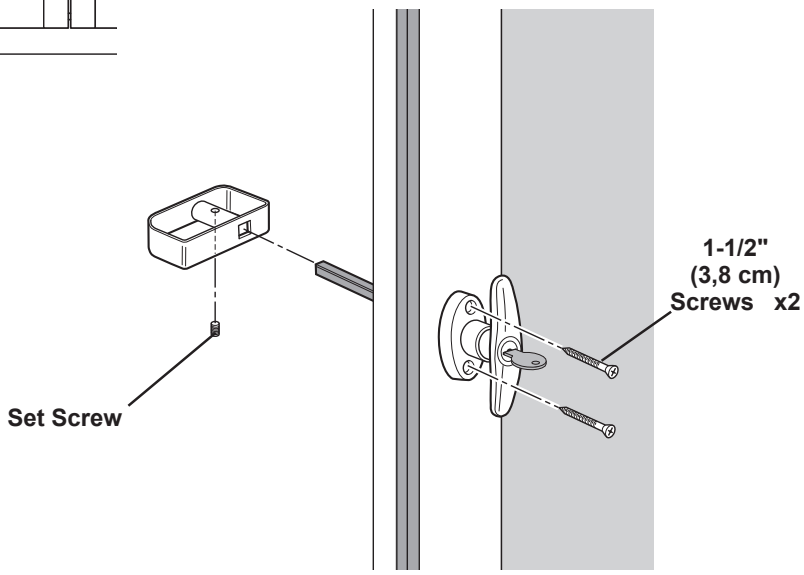

FINISH

Your door handle is now installed.

DOOR HARDWARE

PARTS REQUIRED:

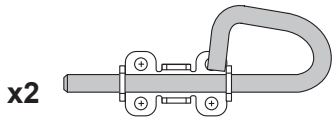

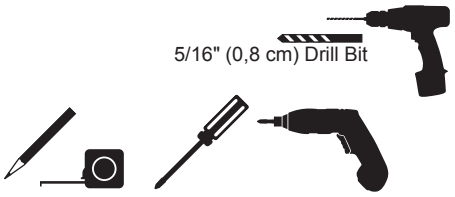

BEGIN

1. Place spring bolt onto **OO** in open position with bolt end 3/8" down from frame. Bolt is open when loop is contacting base **(Fig A)**.

   Mark and pre-drill holes for screws.

2. Install bolt with screws supplied and drill 5/16" hole for bolt to extend into.

3. Place bolt onto **OO** in open position with bolt end 1/2" up from floor. Bolt is open when loop is contacting base **(Fig B)**.

   Mark and pre-drill holes for screws.

4. Install bolt with screws supplied and drill 5/16" hole for bolt to extend into.

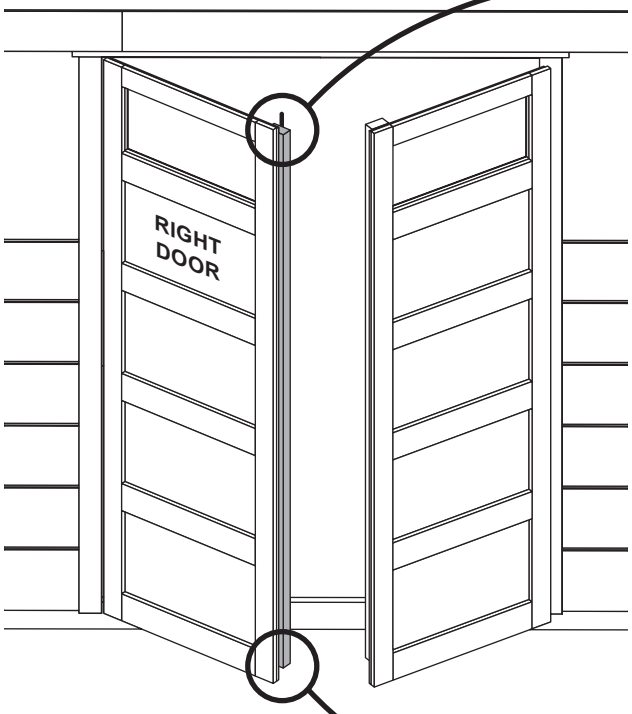

Fig. A

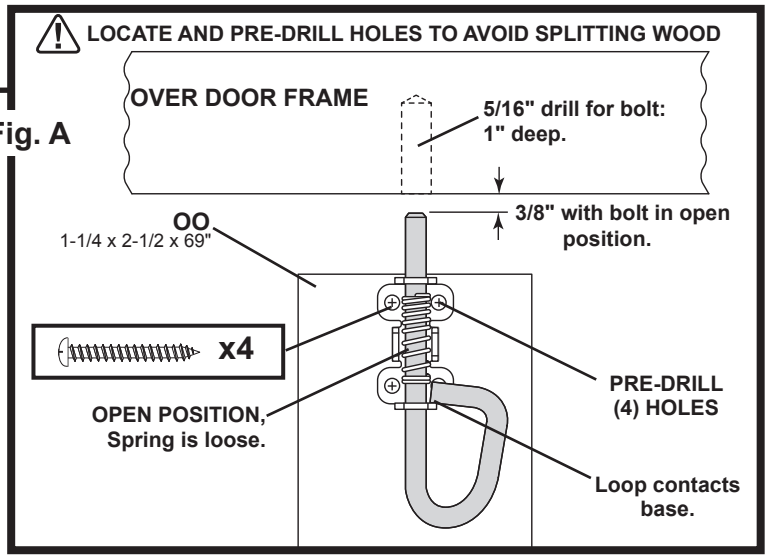

Fig. B

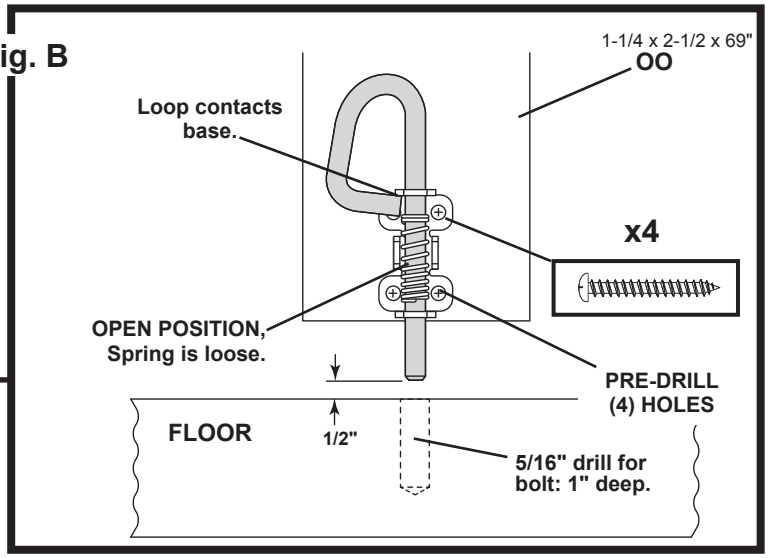

FINISH

Your spring bolts are now installed.

RIGHT & LEFT SIDE TRIM

PARTS REQUIRED:

x1 3/8" x 1-3/4" x 67-5/16" (1,0 x 4,4 x 171,0 cm)

x1 3/8" x 1-3/4" x 75-11/16" (1,0 x 4,4 x 192,2 cm)

x1 3/8" x 1-3/4" x 67-5/16" (1,0 x 4,4 x 171,0 cm)

x1 3/8" x 1-3/4" x 75-11/16" (1,0 x 4,4 x 192,2 cm)

x26 2" (5,1 cm)



Install trim with the primed side facing out.

BEGIN

1 Install right side corner trim flush to soffit and flush to front and back wall panels. Secure with 2" finishing nails spaced evenly.

Repeat for left side.

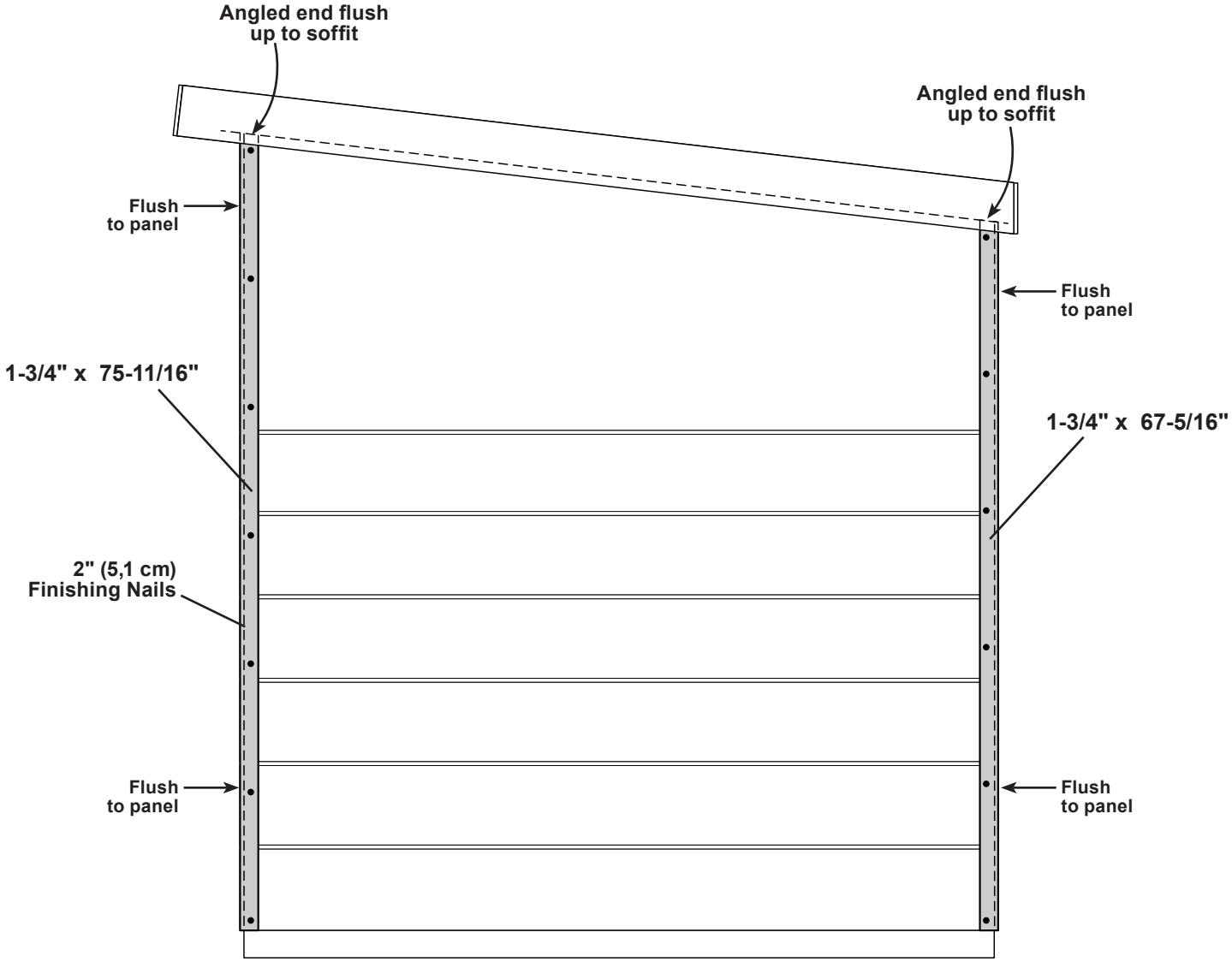

ROOF PANELS

PARTS REQUIRED:

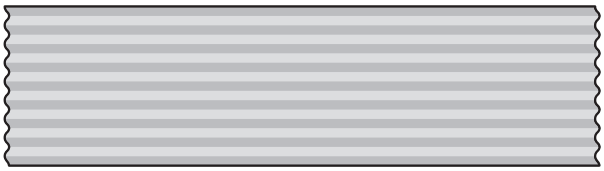

x1

26" x 82-1/2" (66 x 209,6 cm)

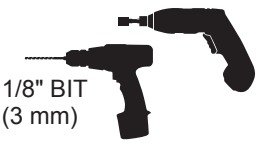

1/8" BIT
(3 mm)

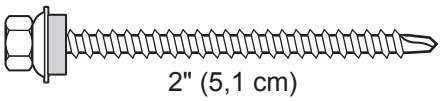

x18

2" (5,1 cm)



x1

Foam Strip 26" (66 cm)



BEGIN

1

Install the first roof panel flush to front edge of roof overhang trim and flush to edge of right side trim **(Fig. B)**.

Measure and mark centers of all purlins and upper wall framing.

Use Fig. A as a measuring guide.

Fig. A

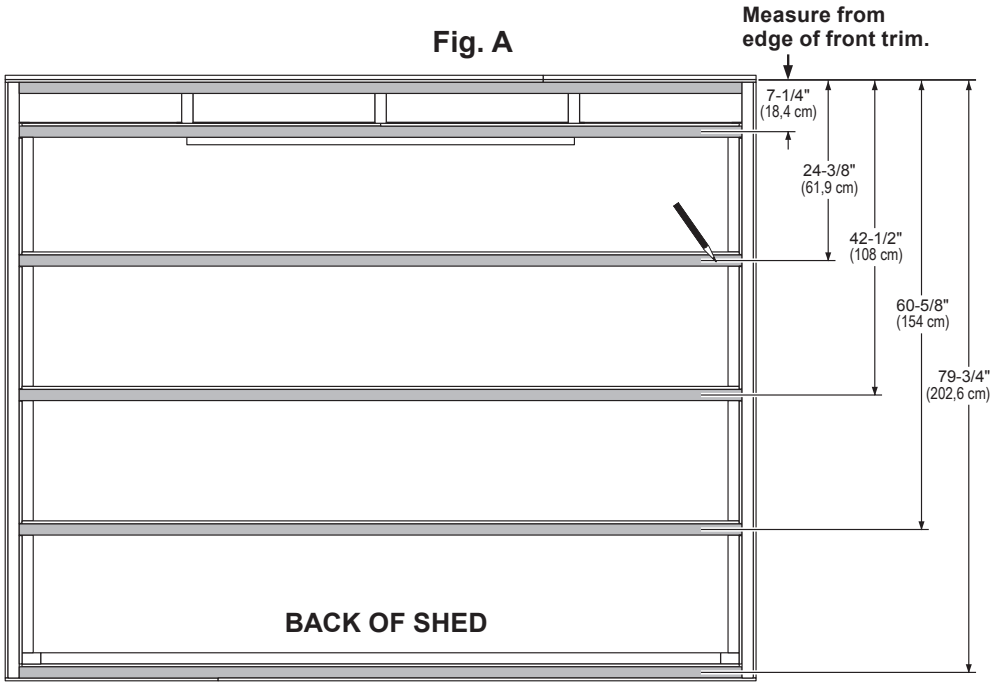

2

Install (1) foam enclosure strip between roof panel and back wall purlin.
Flush foam strip along inner edge of trim.

Install (6) screws in the panel valley nearest right edge **(Fig. B)**, and then with (12) screws in each of the 3rd and 5th valleys, as shown.

Center screws in framing.
Predrill all holes.



CAUTION:
Do not stand or lean on roof panels.

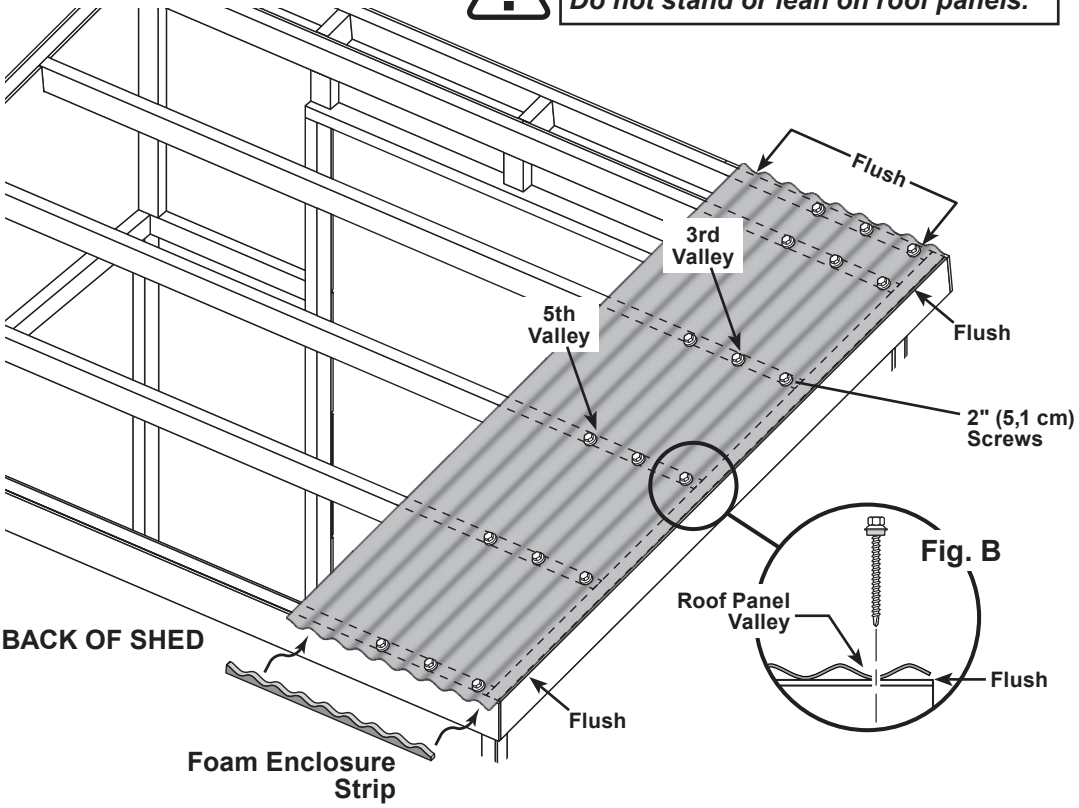

Fig. B

ROOF PANELS

PARTS REQUIRED:

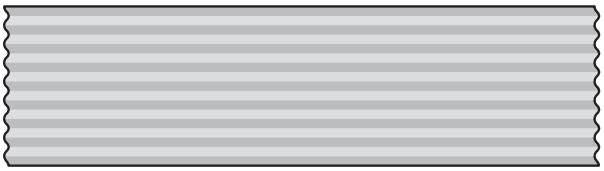

x1

26" x 82-1/2" (66 x 209,6 cm)

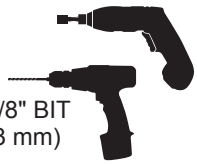

1/8" BIT
(3 mm)

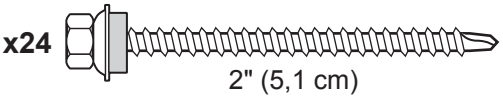

x24

2" (5,1 cm)



x1

Foam Strip 26" (66 cm)



Install roof panel with 3 overlapping countour waves covering the installed panel.

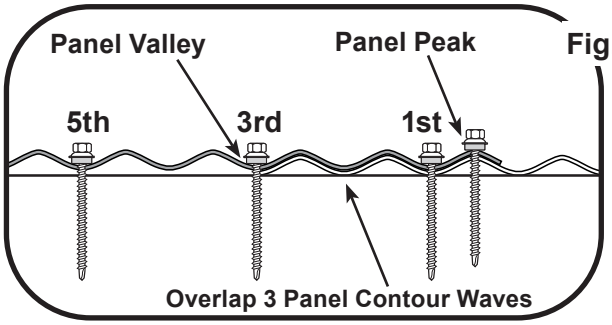

Fig. C

3

Install 2nd panel overlapping the first panel by 3 panel contour waves **(Fig. C)**
and flush to back edge of installed panel.
Measure to centers of all purlins and upper wall framing.
Use Fig. A, (step 1) as a measuring guide.

Install (1) foam enclosure strip between roof panel and back wall angled purlin frame.
Flush foam strip along inner edge of trim.

Secure panel to purlins and framing with (6) 2" screws in panel peak **(Fig. C)**.
Center screws in framing.
Predrill all holes.

Secure panel to purlins and framing with (18) 2" screws in each of the 1st, 3rd and 5th panel valleys **(Fig. C)**.
Center screws in framing.
Predrill all holes.

CAUTION: Do not over-drive the screws in the peaks; snug only!

CAUTION:
Do not stand or lean on roof panels.

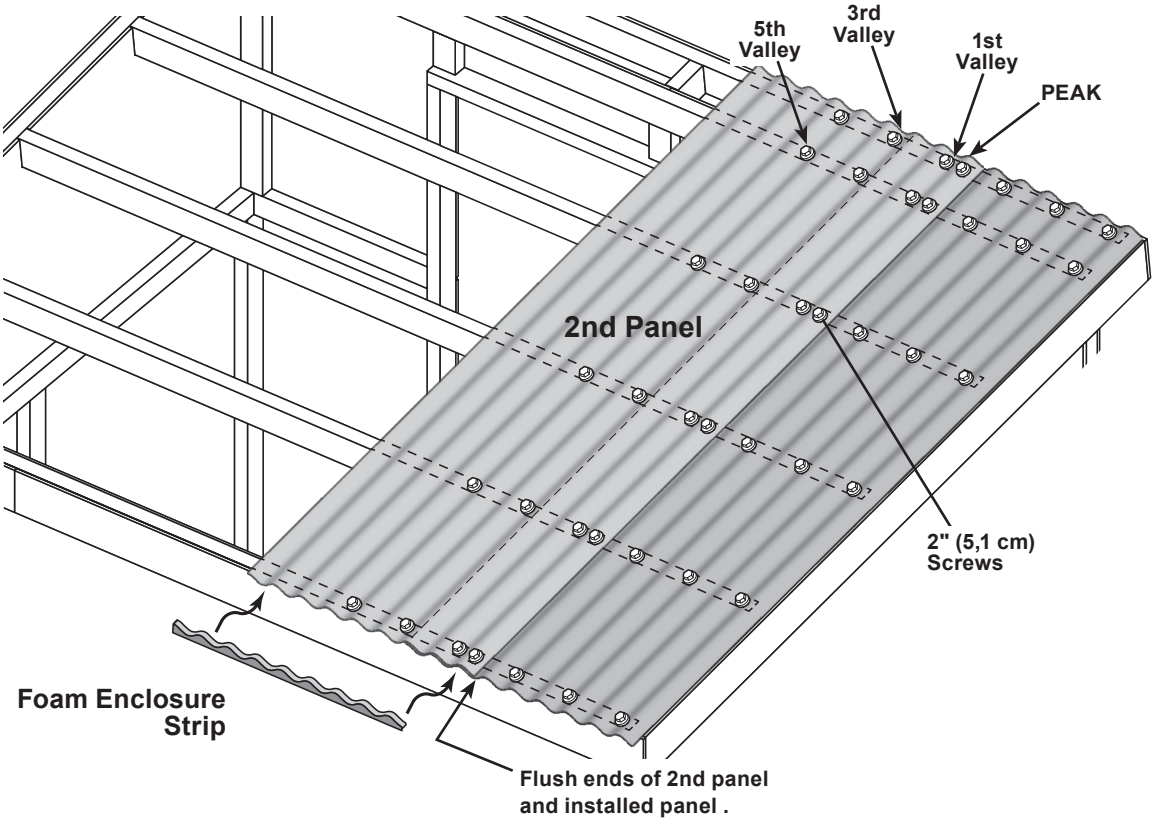

ROOF PANELS

PARTS REQUIRED:

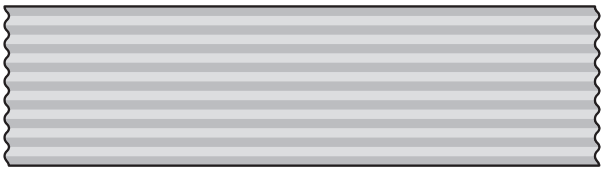

x1

26" x 82-1/2" (66 x 209,6 cm)

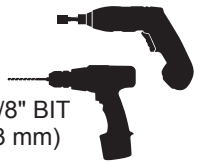

1/8" BIT
(3 mm)

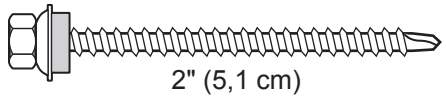

x24

2" (5,1 cm)



x1

Foam Strip 26" (66 cm)



4

Install 3rd panel overlapping the 2nd panel by 3 panel contour waves **(Fig. C)** and flush to back edge of installed panel. Measure to centers of all purlins and upper wall framing. ***Use Fig. A, (step 1) as a measuring guide.***

Install (1) foam enclosure strip between roof panel and back wall angled purlin frame.
Flush foam strip along inner edge of trim.

Secure panel to purlins and framing with (6) 2" screws in panel peak **(Fig. C)**.
Center screws in framing.
Predrill all holes.

Secure panel to purlins and framing with (18) 2" screws in each of the 1st, 3rd and 5th panel valleys **(Fig. C)**.
Center screws in framing.
Predrill all holes.

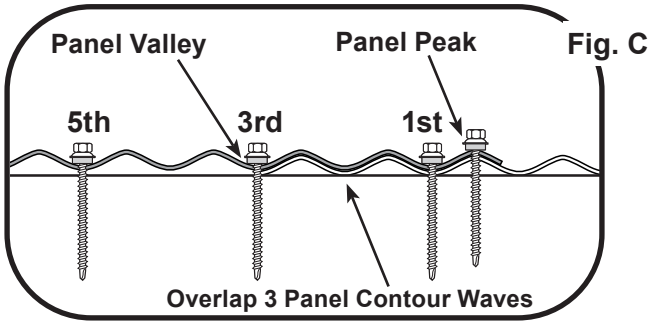

Fig. C

CAUTION: Do not over-drive the screws in the peaks; snug only!

CAUTION:
Do not stand or lean on roof panels.

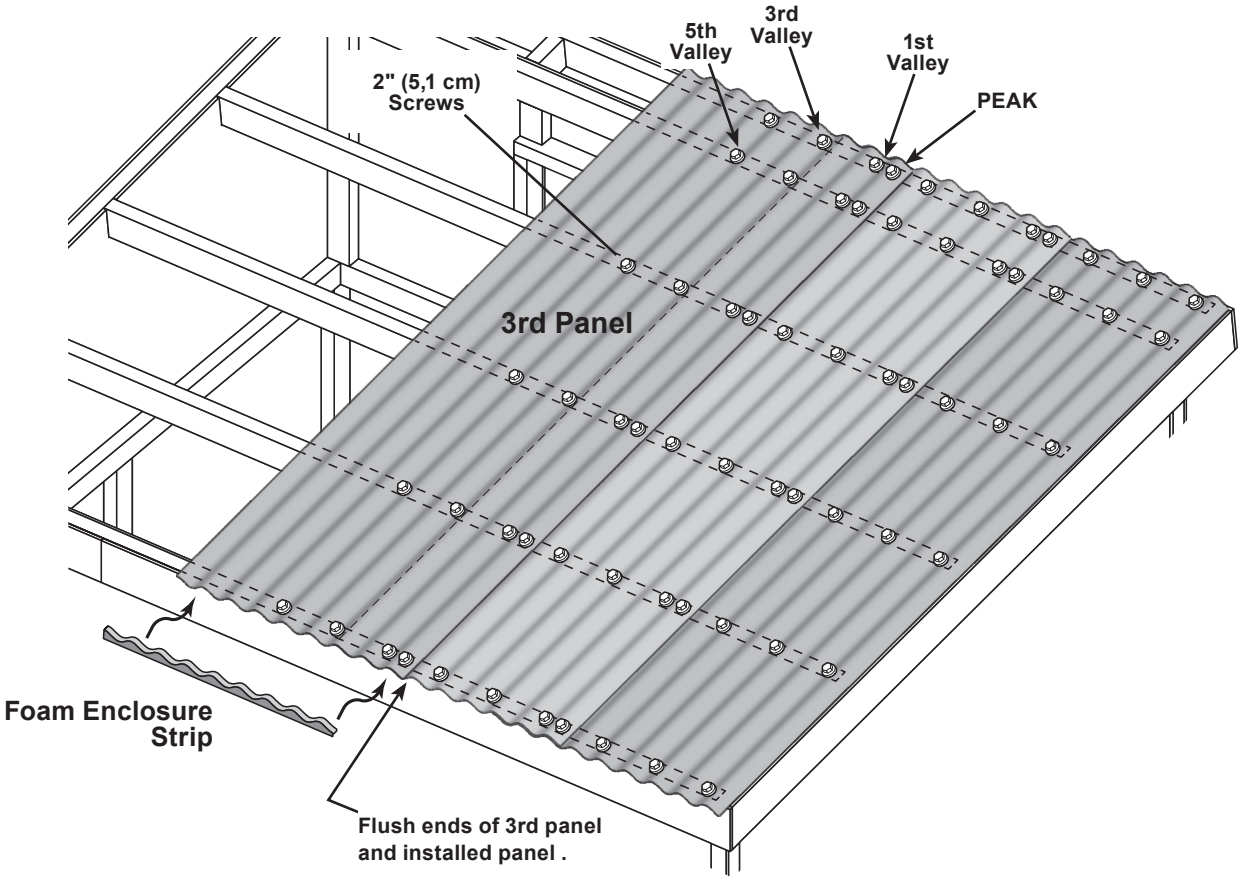

ROOF PANELS

PARTS REQUIRED:

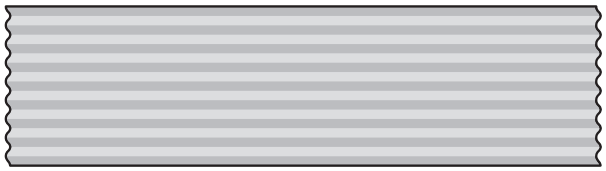

x1

26" x 82-1/2" (66 x 209,6 cm)

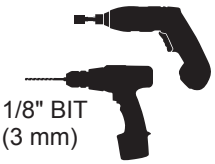

1/8" BIT
(3 mm)

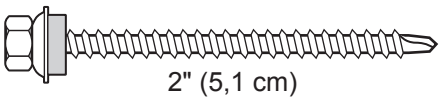

x30

2" (5,1 cm)



x1

Foam Strip 26" (66 cm)



5

Install 4th panel overlapping the 3rd panel by 3 panel contour waves **(Fig. D)** and flush to back edge of installed panel.
Measure to centers of all purlins and upper wall framing.
Use Fig. A, (step 1) as a measuring guide.

Install (1) foam enclosure strip between roof panel and back wall angled purlin frame.
Flush foam strip along inner edge of trim.

Secure panel to purlins and framing with (6) 2" screws in panel peak **(Fig. D)**.
Center screws in framing.
Predrill all holes.

Secure panel to purlins and framing with (2) 2" screws in each of the 1st, 3rd, 5th and 7th panel valleys **(Fig. D)**.
Center screws in framing.
Predrill all holes.

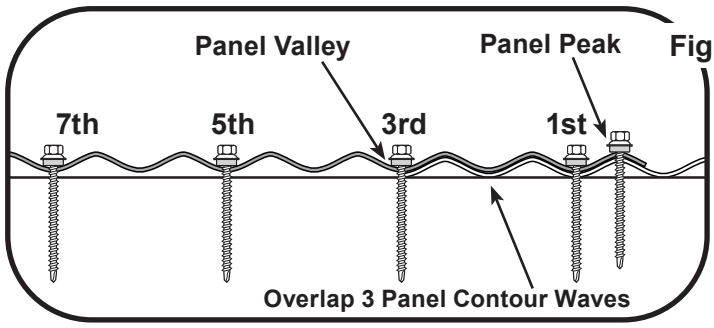

Fig. D

CAUTION: Do not over-drive the screws in the peaks; snug only!

CAUTION:
Do not stand or lean on roof panels.

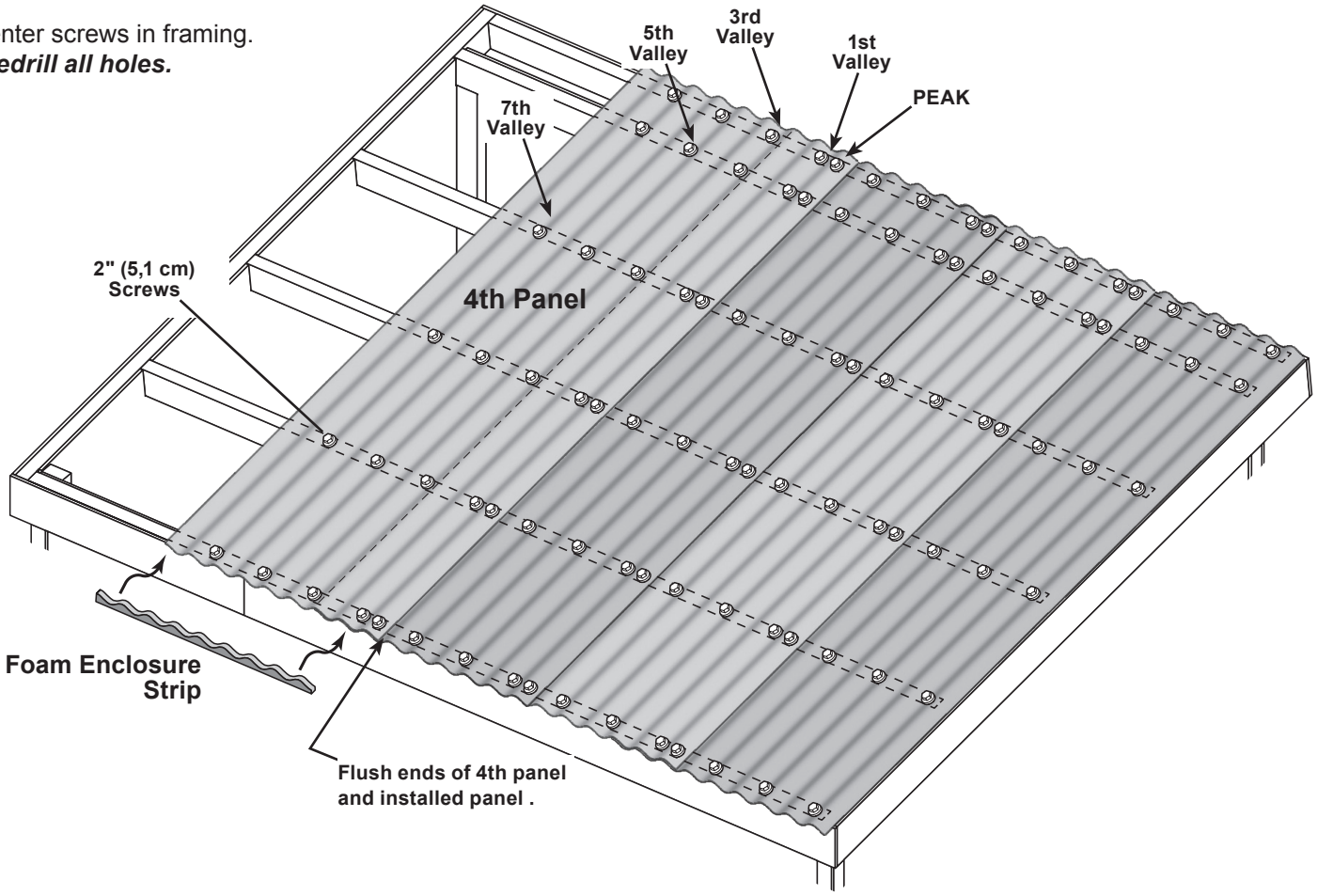

ROOF PANELS

PARTS REQUIRED:

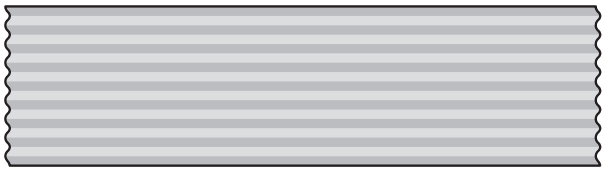

x1

26" x 82-1/2" (66 x 209,6 cm)

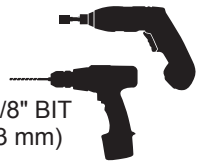

1/8" BIT
(3 mm)

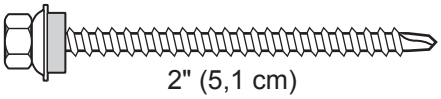

x36

2" (5,1 cm)



x1

Foam Strip 26" (66 cm)



6

Install 5th panel overlapping the 4th panel by 2 panel contour waves **(Fig. E)** and flush to back edge of installed panel.
Measure to centers of all purlins and upper wall framing.
Use Fig. A, (step 1) as a measuring guide.

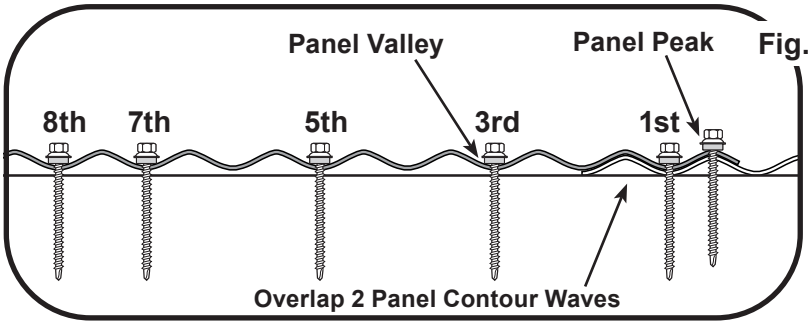

Fig. E

Install (1) foam enclosure strip between roof panel and back wall angled purlin frame.
Flush foam strip along inner edge of trim.

Secure panel to purlins and framing with (6) 2" screws in panel peak **(Fig. E)**.
Center screws in framing.
Predrill all holes.

Secure panel to purlins and framing with (30) 2" screws in each of the 1st, 3rd, 5th,7th and 8th panel valleys, as shown,
and as in **(Fig. E)**.
Center screws in framing.
Predrill all holes.

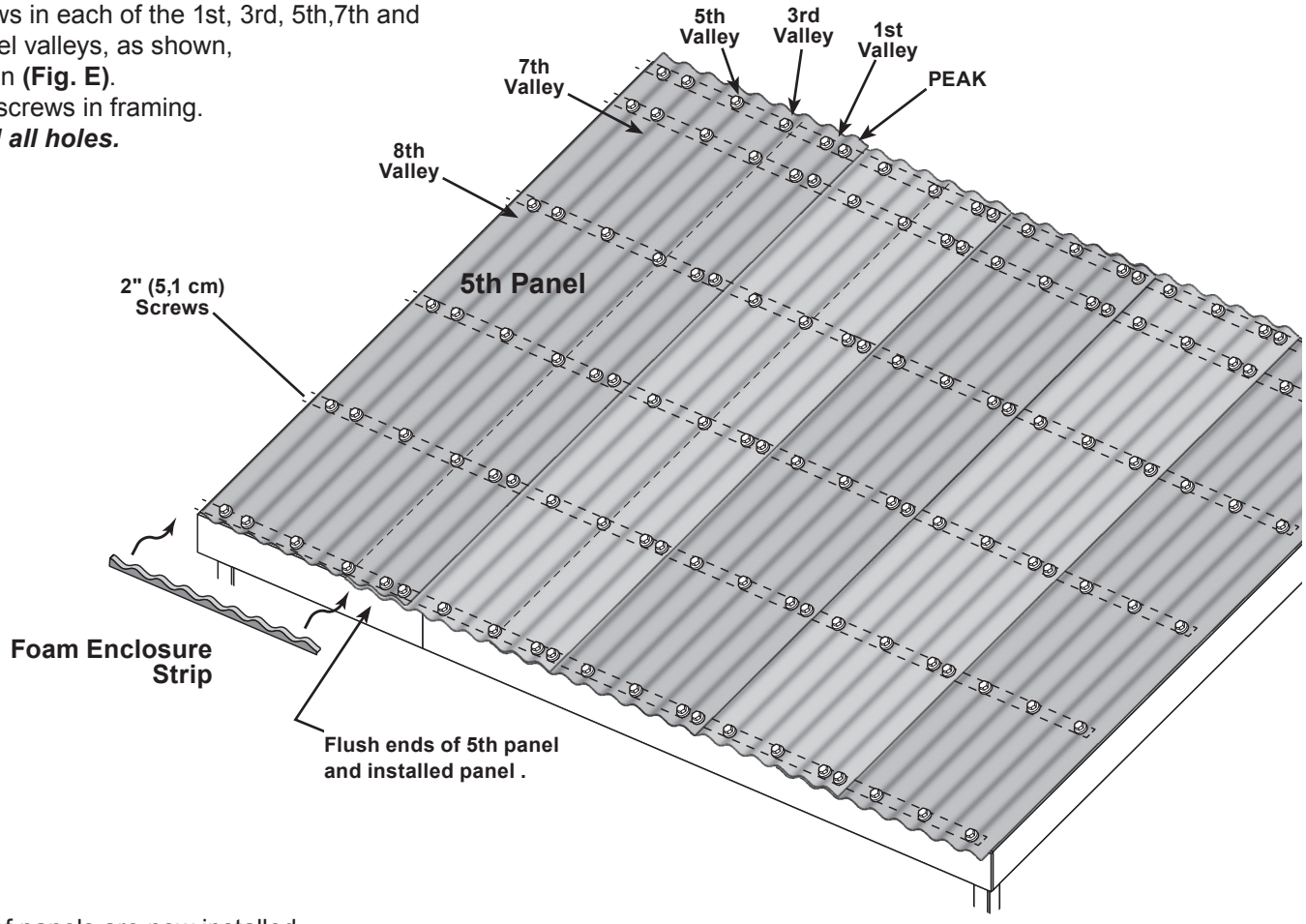

FINISH

Your roof panels are now installed.

ROOF PANELS

Note to installer: Please refer to this roof panel screw layout guide.

Screws in panel contour valleys are shown as filled with black.

Center screws in framing.

Predrill all holes.

CAUTION: Do not over-drive the screws in the peaks; snug only!

CAUTION:
Do not stand or lean on roof panels.

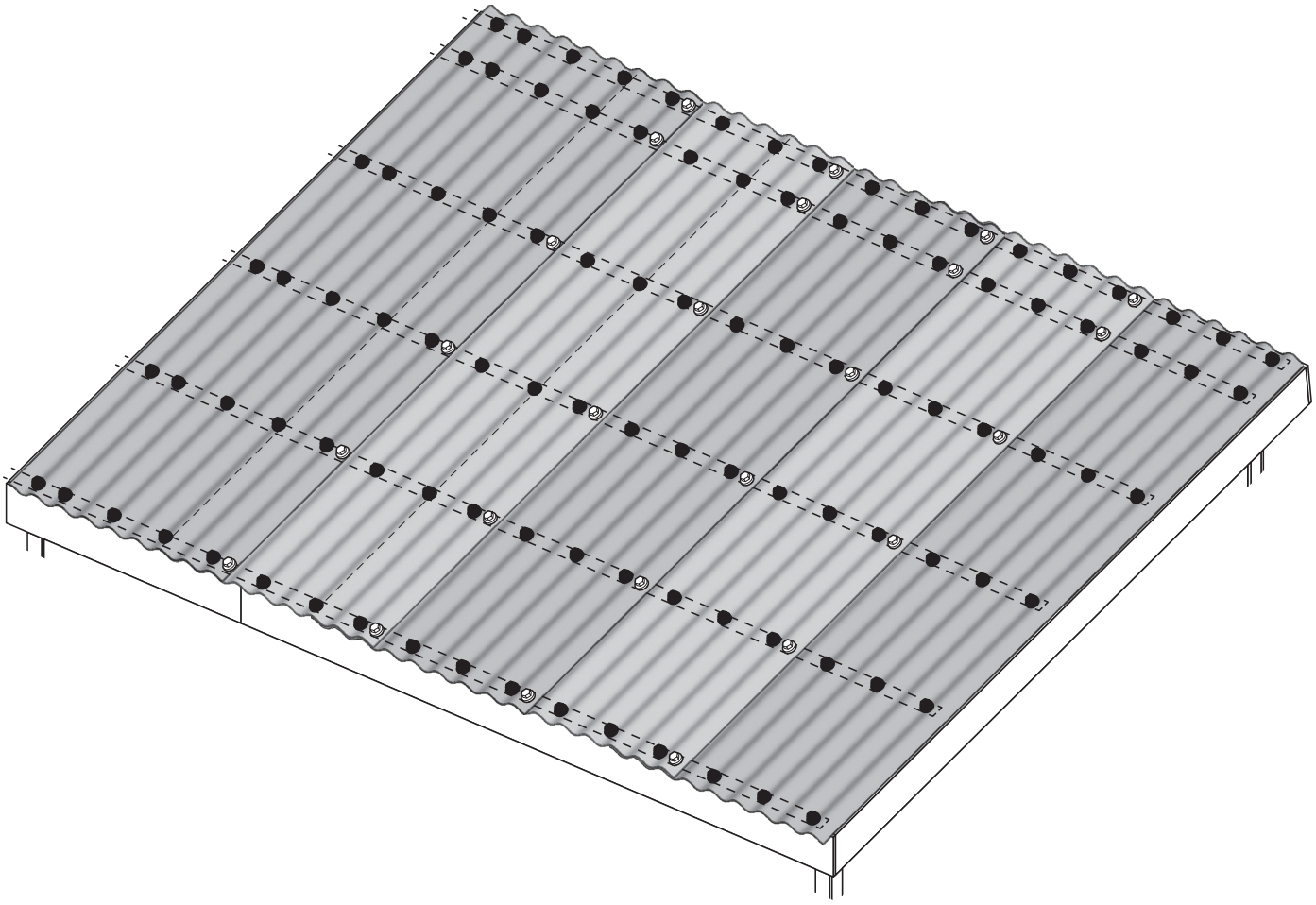

RAKE FLASHING

PARTS REQUIRED:

x1

Rake Flashing 15454 1-1/4" x 95-1/2" (3,2 x 242,6 cm)

x11

2" (5,1 cm)

1/8" BIT
(3 mm)

BEGIN

1

Measure, mark and cut (1) **1-1/4" x 95-1/2"** Rake Flashing into (2) 47-3/4" pieces.

Install each flashing strip flush to the back edge of roof panels and flush to side fascia.

Secure with 2" screws spaced approximately 8" apart.
Drive screws through the flashing and into the side trim framing **(Fig. F)**.

Don't over-drive screws.

Fig. F

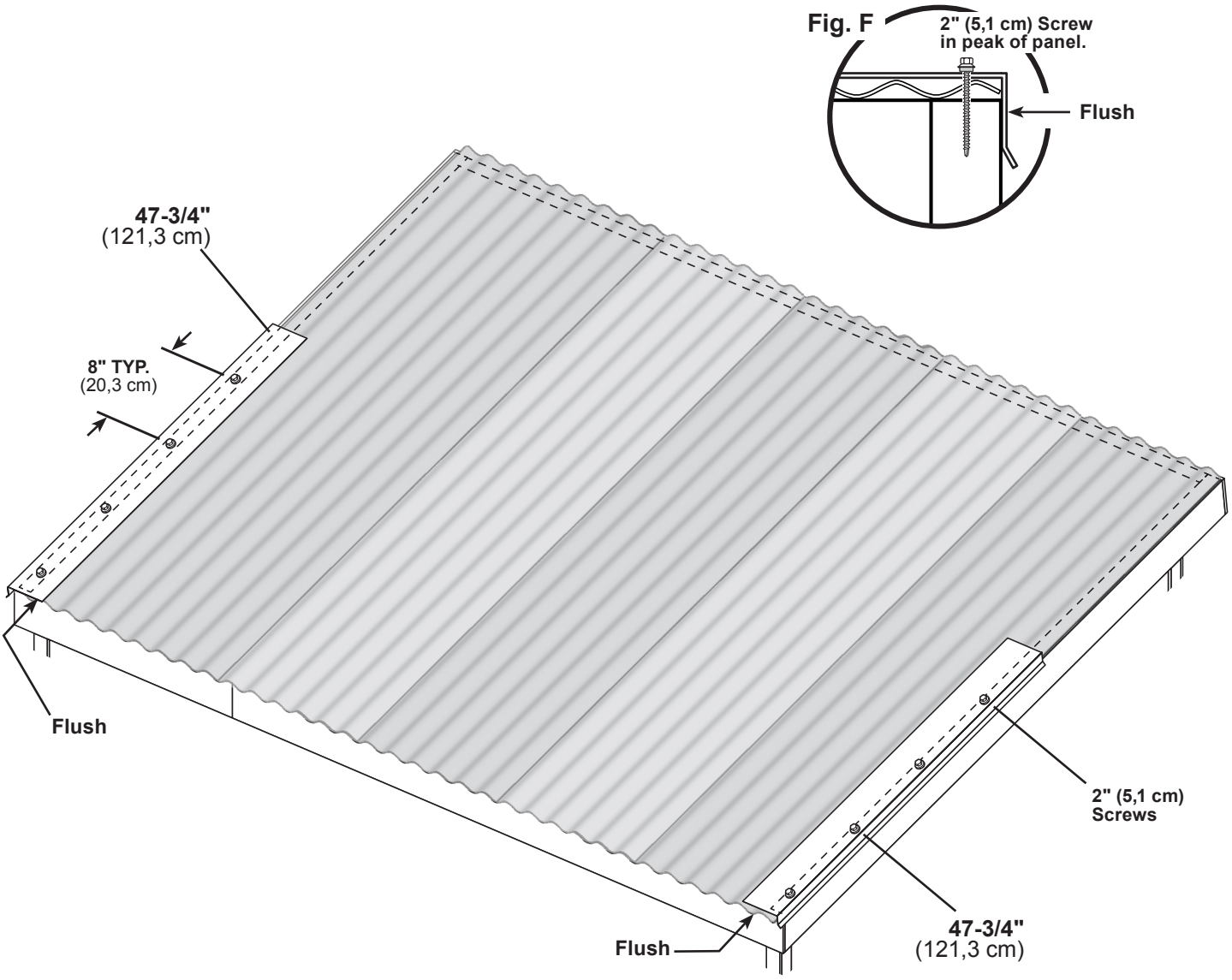

RAKE FLASHING

PARTS REQUIRED:

x5 **Foam Strip** 26" (66 cm)

x2 **Rake Flashing 15454** 1-1/4" x 95-1/2" (3,2 x 242,6 cm)

x22 2" (5,1 cm)

1/8" BIT (3 mm)

2

Measure, mark and cut (2) **1-1/4" x 95-1/2"** Roof Flashing strips, as shown.
Snip and cut out corners for over-bend, as shown **(Fig. G)**.
NOTE: Pre-bend flashing around a rigid, square corner *(use a 2x4 end)*.

Fig. G

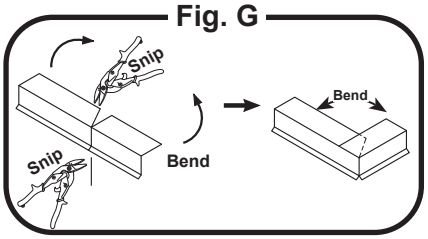

3

Flush corners of flashing to corners of roof. Overlap flashing at center of front overhang and side flashing.
Install foam enclosure strips end-to-end between roof panel and rake flashing.
Secure flashing with 2" screws in panel peaks, spaced approx. 8" apart, with (2) screws in each overlap.
Drive screws through the flashing, foam strips and into the panel peaks along front of roof **(Fig. H)**.

4

Secure flashing to side framing with 2" screws spaced approx. 8" apart, with (2) screws in each overlap.

Fig. H

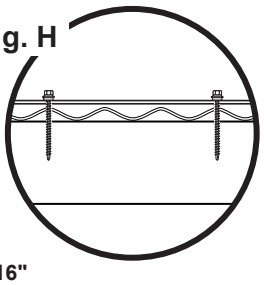

FINISH

Your rake flashing is now installed.

16903-C 8' x 6' Order Form

CATEGORY	PART DESCRIPTION	PART SIZE	PART ITEM #	BUILDING QTY.	PART ID
2 X 3	Side Wall Brace	2 X 3 X 69"	Q 69000000000	2	**OV**
	Back Wall Brace	LUM SPF 2X3X96 #2&BTR	12115	1	**PT**
	Crippler	2 X 3 X 3-3/16"	Q 03030000000	3	**FAB**
	Wall Stud	2 X 3 X 44-3/8"	Q 44060000000	8	**HUD**
	Upper Front Wall Studs	2 X 3 X 27-11/16"	Q 27110000000	2	**LOA**
	Door Frame	2 X 3 X 69 14/16"	Q 69140000000	2	**ONB**
	Door Header	2 X 3 X 51-7/8"	Q 51140000000	1	**QXA**
	Upper Back Wall Stud	2 X 3 X 22-5/8"	Q 22100000000	2	**TNB**
	Front Wall Frame	2 X 3 X 22-1/16"	Q 22010000000	2	**WFS**
2 X 4	Purlin	2 X 4 X 96-3/4"	O 96120000000	4	**UXA**
	Purlin - Angled Rip	2 x 4 x 96-3/4" @ 7* BEVEL	O 961200000BC	2	**TPC**
	Side Overhang	2 x 4 x 80-11/16" RAFTER 7*	O 80110700000	2	**RPY**
	Overhang Block	2 x 4 x 4-7/16" @ 7*	O 04070700000	3	**AFD**
2 X 4 TREATED FLOOR FRAME	Floor Joist	LUM TRTD 2 X 4 X 93 #2&BTR	P 93000000000	4	---
	Floor Frame	LUM TRTD 2 X 4 X 72 #2&BTR	P 72000000000	2	---
5/8 OSB	Floor Panel - Large	OSB 5/8" X 4' X 8'	11117	1	---
	Floor Panel - Small	5/8" OSB 23 7/8" X 96" FLOOR	E 96002314000	1	---
NO GROOVE SIDING	Back Wall	3/8" NG 23 7/8" X 96"	K 96002314000	1	---
	Front/Back Fascia - Long	3/8" NG 4-7/8" X 72"	K 72000414000	2	---
	Front/Back Fascia - Short	*3/8" NG 4-7/8" x 28-1/2"	K 28080414000	2	---
	Front Soffit - Long	*3/8" NG 5-13/16" X 75-3/4"	K 75120513000	1	---
	Front Soffit - Short	*3/8" NG 5-13/16" x 24"	K 24000513000	1	---
	Left Fascia	*3/8 NG 4-7/8" X 80-7/8" LFT	K 80140414200	1	---
	Right Fascia	*3/8 NG 4-7/8" X 80-7/8" RGT	K 80140414100	1	---
	Front Panel - Upper Left	3/8" NG 32-7/16" X 48" LFT PANEL	K 48003207400	1	---
	Front Panel - Upper Right	3/8" NG 32-7/16" X 48" RGT PANEL	K 48003207300	1	---
	Gable Panel - Left	3/8" NG 32-7/16" X 72" LFT GABLE	K 72003207200	1	---
	Gable Panel - Right	3/8" NG 32-7/16" X 72" RGT GABLE	K 72003207100	1	---
	Back Soffit - Long	*3/8" NG 1-1/2" X 76"	K 76000108000	1	---
	Back Soffit - Short	3/8" NG 1-1/2" X 23-14"	K 23140108000	1	---
	Side Soffit	*3/8" NG 1-1/2" X 73-5/16"	K 73050108000	2	---
	Vertical Trim - Front	3/8" NG 1-3/4" X 75-11/16"	K 75110112000	2	---
	Vertical Trim - Front Right	*3/8" NG 1-3/4" X 75-11/16" RGT	K 75110112100	1	---
	Vertical Trim - Front Left	*3/8" NG 1-3/4" X 75-11/16" LFT	K 75110112200	1	---
	Vertical Trim - Back	3/8" NG 1-3/4" X 67-1/8"	K 67020112000	2	---
	Vertical Trim - Back Right	*3/8" NG 1-3/4" X 67-5/16" RGT	K 67050112100	1	---
	Vertical Trim - Back Left	*3/8" NG 1-3/4" X 67-5/16" LFT	K 67050112200	1	---
SHIPLAP 8OC SIDING	Lower Wall Panel - Right/Left	3/8" SL 47-1/8" X 72"	JL7200470200C	2	---
	Lower Wall Panel - Back	3/8" SL 47-1/8" X 96"	JL96004702000	1	---
	Lower Wall Panel - Front	3/8" SL 47-1/8" X 23-9/16"	JL23094702000	2	---
19/32 X 3 SMART TRIM	Over Door Trim	19/32 TST 2-1/2" X 54-9/16"	UT54090208000	1	**JSA**
19/32 X 4 SMART TRIM	Door Rail	19/32 TST 3-1/2" X 18-5/8"	UT18100308000	8	**RIC**
	Rail Guide	19/32 TST 3 1/2" X 10 3/4"	UT10120308000	1	**IFA**
	Diagonal Rail - Right	19/32 TST 3 1/2" x 55 9/16" 16* RGT	UT55090308116	1	**AIB**
	Diagonal Rail - Left	19/32 TST 3 1/2" x 55 9/16" 16* LFT	UT55090308216	1	**AIC**
PURCHASED COMPONENTS	Door Stiffener	LSL 1-1/4 X 2-1/4 X 69 PET	12715	2	**OO**
	Gridless Door Window	WINDOW 9X19" TRANSOM (SINGLE)	15758	2	---
	Threshold Screws	H/K ADDENDUM for THRESHOLD SC	15840	1	---
	Threshold	THRESHOLD 7/8 X 1-1/2 X 47-7/8	15422	1	---
	Handle	HANDLE - T 4" SHAFT & "D"	15375	1	---
	Hardware kit	H/K (33258) 8X6 MELBOURNE	15737	1	---
	Palram Screws	EPDM Washered Fasteners Palram 2"	15598	4	---
	Palram Roof	PALRAM SUNTOP PANEL 82-1/2" x L 26" W	15762	5	---
	Foam Strip	BAG OF (QTY. 5) HORIZONTAL CLOSURE STRIPS (FOAM)	15621	2	---
	Rake Trim	1-1/4" x 4-1/2" x 95-1/2" RAKE	15454	3	---
SUB-ASSEMBLIES	Left Door	72" x 24" DOOR ASSEMBLY LFT	30149-L	1	---
	Right Door	72" x 24" DOOR ASSEMBLY RGT	30149-R	1	---
PACKAGING	Instructions		16903-C	1	---

LIMITED CONDITIONAL WARRANTY*

Backyard Storage Solutions, LLC warrants the following:

1. Every product is warranted from defects in workmanship and manufacturing for 1 year.
2. All accessories, hardware and metal components are warranted for 2 years.
3. All Oriented Strand Board (OSB) is warranted for 2 years
4. Siding and Trim is warranted for 10 years.
5. Solar Shed windows are warranted for 1 year.
6. Cedar lumber is warranted for 15 years.
7. Preserved Pine is warranted for 10 years.
8. Redwood is warranted for 10 years.

Backyard Storage Solutions, LLC will repair, replace or pay for the affected part. In no event shall Backyard Storage Solutions, LLC pay the cost of labor or installation or any other costs related thereto. All warranties are from date of purchase. If a cash refund is paid on an affected part, it will be prorated from the date of purchase.

CONDITIONS

The warranty is effective only when:

1. The unit has been erected in accordance with the assembly instructions.
2. The unit has been properly shingled and painted or stained and reasonably and regularly maintained thereafter.
3. The failure occurs when the unit is owned by the original purchaser.
4. Backyard Storage Solutions, LLC has received the warranty registration card within thirty (30) days of purchase and notification of the failure in writing within the warranty period specified above.
5. Backyard Storage Solutions, LLC has had reasonable opportunity during the sixty (60) days following receipt of notification to inspect and verify the failure prior to commencement of any repair work.

REQUIREMENTS

Storage Buildings

To validate your warranty, it is necessary to properly maintain your Backyard Storage Solutions, LLC unit; shingle the roof and paint or solid-colored stain the siding using quality, 100% acrylic latex exterior product with a minimum of two (2) coats within thirty (30) days of assembly; caulk above all doors and all horizontal and vertical trim boards; paint and seal all exposed edges, sides and faces of siding/trim and OSB siding to include all exterior walls and all sides and all edges of doors.

Gazebos & Pergolas

To validate your warranty, it is necessary to properly maintain your Backyard Storage Solutions, LLC unit. This includes treating all of the exposed cedar and pine surfaces on your gazebo or pergola structure with an exterior grade wood preservative, an exterior oil-based semi-transparent stain, an acrylic latex exterior paint or an acrylic latex solid color exterior stain within 30 days of assembly and as needed thereafter to maintain your warranty.

Keep vegetation trimmed away from building and make sure siding panels and trim do not come in contact with masonry or cement. The minimum ground clearance for siding must be one half inch (½ inch) from concrete slab or two and one half inches (2 ½") from the ground when building is erected or constructed on a treated wood floor kit. Water from sprinklers must be kept off unit. In no event will Backyard Storage Solutions, LLC be responsible for any indirect, incidental, consequential or special damages nor for failure(s) that are caused by events, acts or omissions beyond our control including, but not limited to, misuse or improper assembly, improper maintenance (which eventually leads to rot or decay) and acts of God. Backyard Storage Solutions, LLC will not be held responsible for any labor costs incurred to construct your unit.
This warranty gives you certain specific rights that vary from state to state.

CLAIM PROCEDURE

To make a claim under this warranty, you can either call 1-888-827-9056 or email: customerservice@backyardproducts.com.
Please have ready the information below when you call or include the information in your email:

1. The model and size of the product.
2. A list of the part(s) for which the claim is made.
3. Proof of purchase of the Backyard Storage Solutions, LLC item, as shown on the original invoice or receipt.
4. Run code: found on exterior product label or assembly instructions enclosed in the product package.

All other inquiries can be mailed to:

Backyard Storage Solutions, LLC
Attn: Customer Service
1000 Ternes
Monroe, MI 48162

***WARRANTY TERMS MAY VARY OUTSIDE THE U.S.A.**

IMPORTANT: This is your warranty certificate.