KOHLER

Components® | K-T78025-8

MasterShower® volume control valve trim with Oyl handle

Features

- Single handle provides on/off activation and volume control
- Coordinates with Components faucets, accessories, and showering components to complete your bathroom



Available Colors/Finishes

Color tiles intended for reference only.

	CP	Polished Chrome
	SN	Vibrant Polished Nickel
	AF	Vibrant French Gold
	BN	Vibrant Brushed Nickel
	BV	Vibrant Brushed Bronze
	BL	Matte Black
	2MB	Vibrant Brushed Moderne Brass
	TT	Vibrant Titanium
	BGP	Vibrant Brushed Graphite

1-800-4KOHLER (1-800-456-4537)
Kohler Co. reserves the right to make revisions without notice to product specifications.
For the most current specification sheet, go to www.kohler.com USA or www.kohler.ca Canada.
5-31-2026 0:14 - US-CA

THE BOLD LOOK OF KOHLER

Codes/Standards

ASME A112.18.1/CSA B125.1

Technical Information

All product dimensions are nominal.

Handle

Handle Style/ Type:	Lever

Valves

Required Valve:	Volume Control

Material

- Premium material construction with metal handle ensures reliability and durability
- KOHLER finishes resist corrosion and tarnishing

Recommended Products/Accessories

K-23723 Faucet cleaner

Required Products/Accessories

- K-2974-K 1/2" volume control valve

or

- K-2977-K 3/4" volume control valve

Warranty

See website for detailed warranty information.

KOHLER® Faucet Lifetime Limited Warranty

1-800-4KOHLER (1-800-456-4537)
Kohler Co. reserves the right to make revisions without notice to product specifications.
For the most current specification sheet, go to www.kohler.com USA or www.kohler.ca Canada.
5-31-2026 0:14 - US-CA

THE BOLD LOOK OF KOHLER®

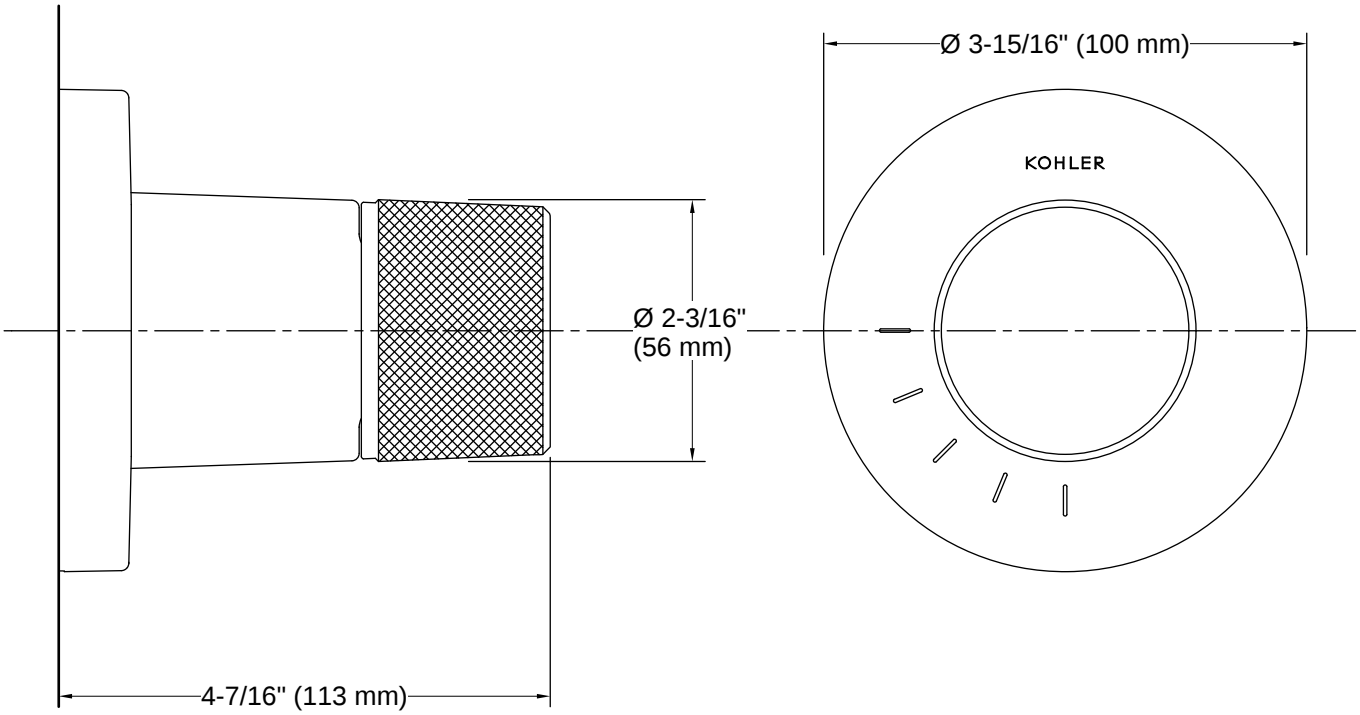

Installation

- Patented K-joint installation technology ensures consistent trim appearance, regardless of variability in valve rough-in

Installation Notes

Install this product according to the installation instructions.

1-800-4KOHLER (1-800-456-4537)
Kohler Co. reserves the right to make revisions without notice to product specifications.
For the most current specification sheet, go to www.kohler.com USA or www.kohler.ca Canada.
5-31-2026 0:14 - US-CA

THE BOLD LOOK OF KOHLER