CEILING FAN

Instruction Manual

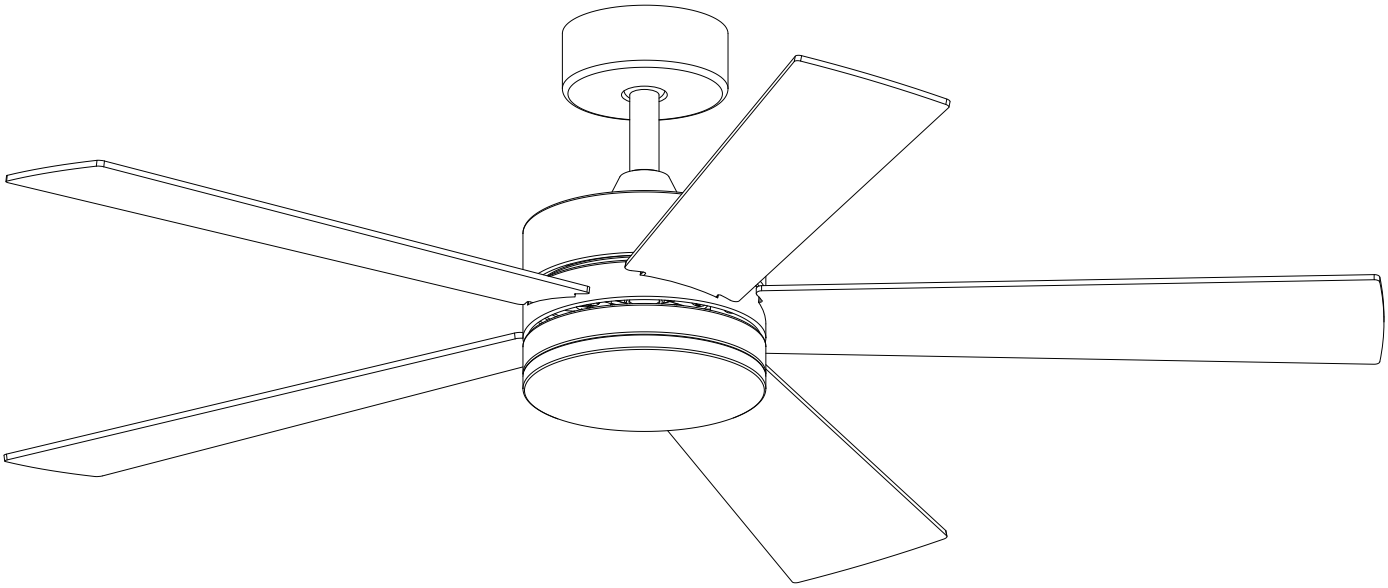

MODEL NO.: FL9220-BLACK

(120V/60Hz)

Read Carefully Before Installation
Keep for Future Reference

SAFETY INFORMATION

⚠ Warning

1) To Reduce The Risk Of Electric Shock, Disconnect The Electrical Supply Circuit To The Fan Before attempting installation.
2) After making the wire connections, the wires should be spread apart with the grounded conductor and the equipment-grounding conductor on one side of the junction box and the ungrounded conductor on the other side of the junction box.
3) The splices after being made should be turned upward and pushed carefully up into the junction box.
4) The grounded conductor of the fan to be connected to the grounded conductor of power supply, the ungrounded conductor of the fan to be connected to the ungrounded conductor of power supply, the equipment grounding conductor of the fan to be connected to the equipment-grounding conductor of power supply.
5) To Reduce The risk of fire, electric shock, or injury to persons, disconnect the appliance from the power supply before servicing for cleaning.
6) All wiring in accordance with the national Electric Code ANSI/NFPA 70 and local codes.
7) To Reduce The Risk Of Personal Injury, Do Not Bend The Blade Brackets When Installing The Brackets, Balancing The Blades, Or Cleaning The Fan. Do Not Insert Foreign Objects In Between Rotating Fan Blades.
8) WARNING: To Reduce The Risk Of Fire, Electric Shock, Or Personal Injury, Mount To Junction Box Marked Acceptable for Fan Support of 15.9 kg (35 lbs) or less And Use Mounting Screws Provided With The Junction Box.
9) Check that the junction box is securely installed in place such that it is able to support at least the fan weight. All set screws must be checked, and retightened where necessary, before installation.
10) To Reduce The Risk Of Electric Shock, Disconnect The Electrical Supply Circuit To The Fan Before Installing Light Kit.
11) This fan must be also secured directly to building structure with steel wire rope.
12) This appliance is not intended for use by persons (including children) with reduced physical, sensory or mental capabilities, or lack of experience and knowledge, unless they have been given supervision or instruction concerning use of the appliance by a person responsible for their safety.
13) Children should be supervised to ensure that they do not play with the appliance. **WARNING:** If unusual oscillating movement is observed, immediately stop using the ceiling fan and contact the manufacturer, its service agent or suitably qualified persons. That the replacement of parts of the safety suspension system device shall be performed by the manufacturer, its service agent or suitably qualified persons.
14) The fixing means for attachment to the ceiling such as hooks or other devices shall be fixed with a sufficient strength to withstand 4 times the weight of the ceiling fan. That the mounting of the suspension system shall be performed by the manufacturer, its service agent or suitably qualified persons.
15) **WARNING:** To Reduce The Risk Of Fire, Electric Shock Or Injury To Persons, Do Not Use Replacement Parts That Have Not Been Recommended By The Manufacturer (e.g. Parts Made At Home Using A 3D Printer)

READ AND SAVE THESE INSTRUCTIONS

INTRODUCTION

Before beginning installation of this product, refer to **Parts Diagram** on Page 3 and ensure all parts are present and display no defects. If any part is missing or damaged, contact customer service and do not attempt to install the product. Read all of the safety information on Page 1 before installation or use.

Estimated assembly time: 120 minutes

Product net weight: 6.4KG

Additional tools required for assembly: Electrical tape, flathead & Phillips screwdriver, power screwdriver, adjustable wrench, pliers, wire strippers, safety glasses, and ladder

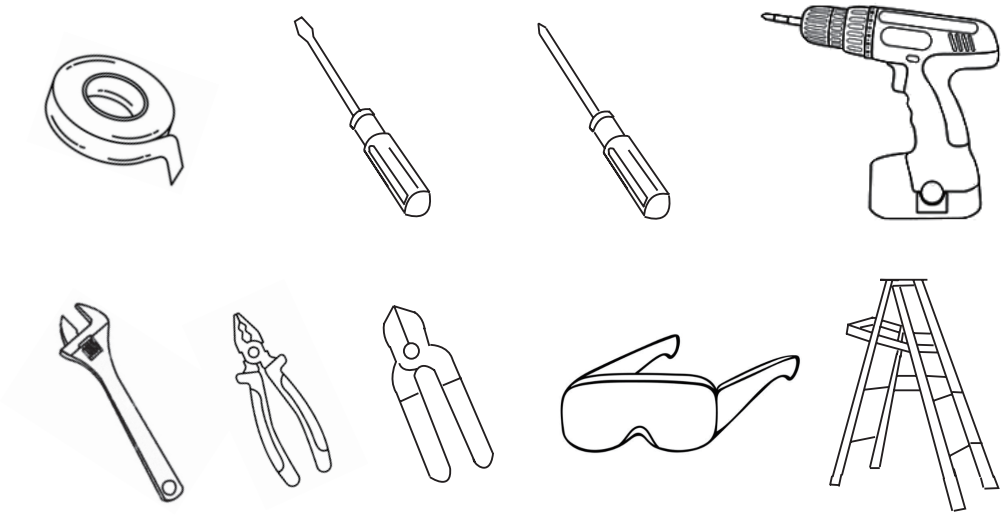

Additional helpful tools: AC tester light, tape measure, wiring handbook, and wire cutters

PARTS DIAGRAM

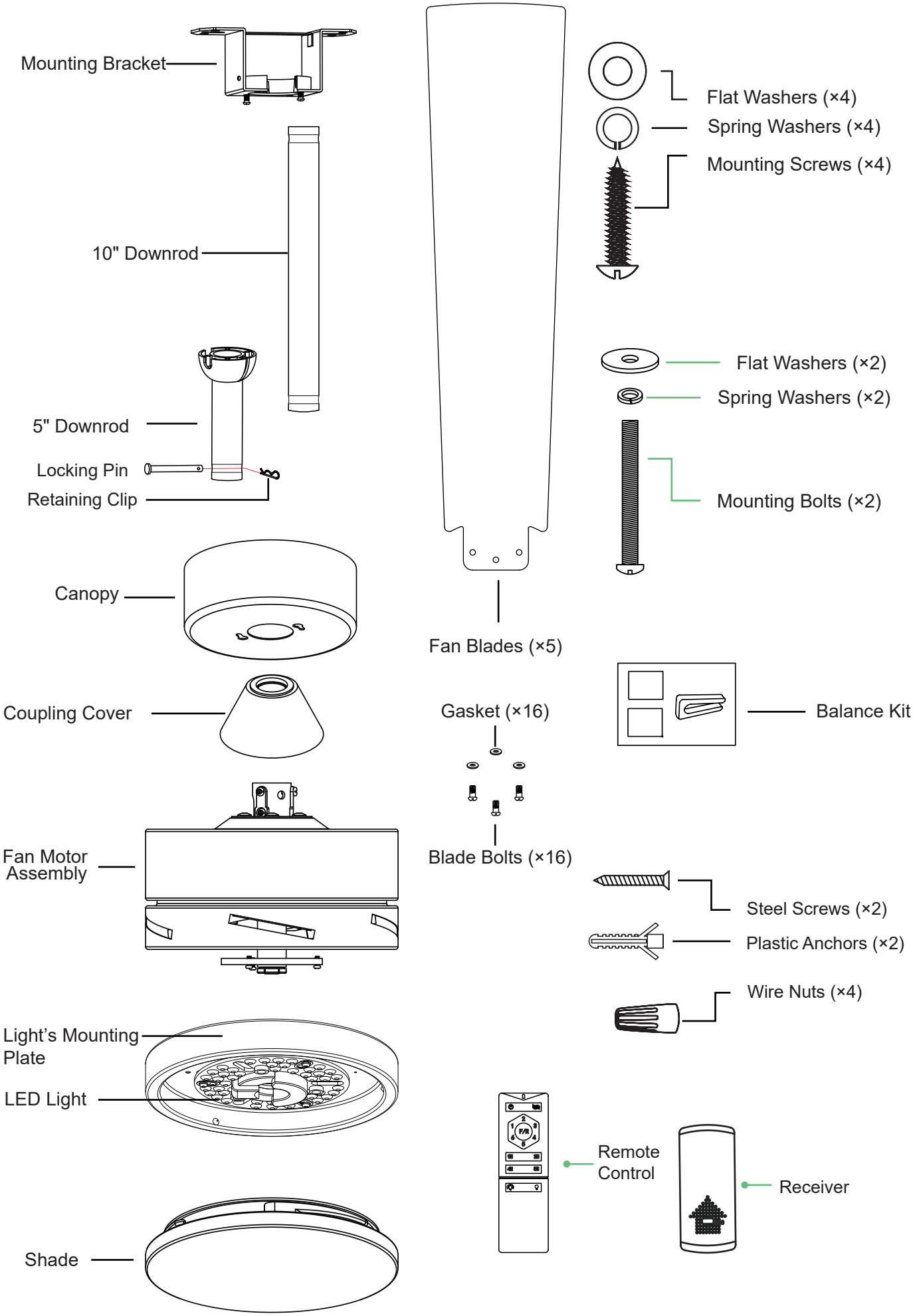

PREPARATION

1

Turn off Your Power

Begin installation by removing fuses or turning off circuit breakers to the wiring you will be using.

Use your compatible UL listed junction box if you already have one installed.

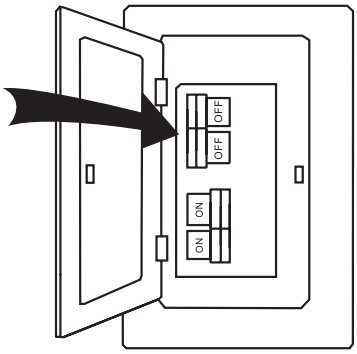

Warning

Failure to disconnect the power supply prior to installation may result in serious injury or death.

2

Choose Your Mounting Position

If you need to install a new UL listed junction box, secure it directly to your building's structure using appropriate fasteners and materials.

Caution

***DO NOT** use plastic boxes.*

The junction box and its supports **MUST** be able to support the **MOVING** weight of the fan (at least 50 lb. or 23 kg) and be rated for fan support.

The junction box should create a level surface for the fan that is **NOT** sloped greater than 10 degrees from horizontal in any direction.

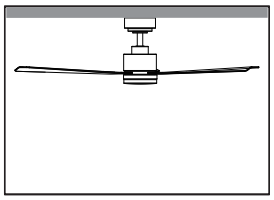

Use **ONLY** on Flat Ceilings (±10°)

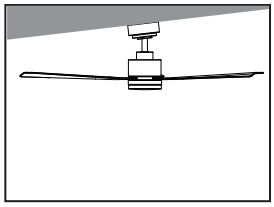

DO NOT Use on Steep Slopes

3

Choose a Suitable Location

Ensure the blades will be at least 30 inches (76 cm) from any obstruction and at least 7 feet (2.5 m) above the floor.

In locations without a ceiling joist, a hanger support bar may be required.

Caution

***DO NOT** install in damp locations.*

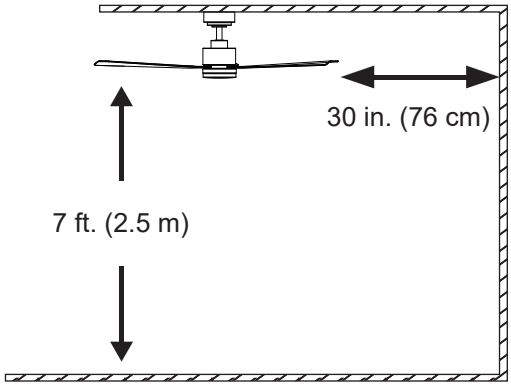

INSTALLATION

Mounting Bracket

The ceiling fan must be installed in the location where there is 12"(300mm) spacing from the tips of all blades to the nearest objects or walls. REMEMBER to turn off the power before hanging the fan. Follow the instruction below to hang your fan properly

1. Pass the supply wires through the central hole of the mounting bracket.
2. Fix the mounting bracket to the junction box with appropriate fasteners. For wooden or other thinner, weaker ceilings, use mounting bolts (x2), Spring Washersx2), Flat Washers(x2) to partially secure brackets.Then, use mounting screws and flat washers and spring washers to secure the bracket in place, adding matching plastic anchors if necessary (not included).
   For reinforced concrete or similar ceilings, use anchor bolts (not included).

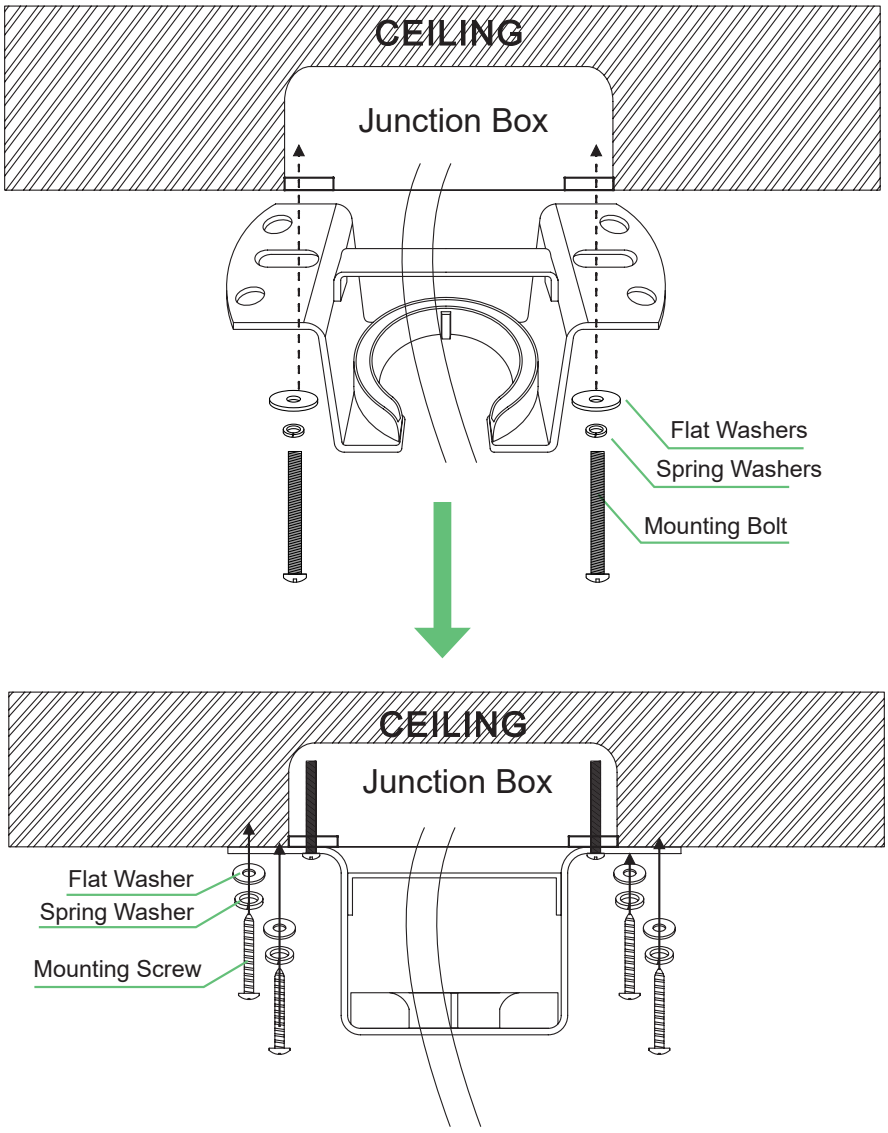

INSTALLATION

Fan Blades

1. Align the hole of the blade with the hole under the motor assembly.
2. Making sure the blade is straight, attach 3 blade bolts to secure it in place.
3. Repeat for the remaining blades.

*There is no need to distinguish the front and back when installing this fan blade

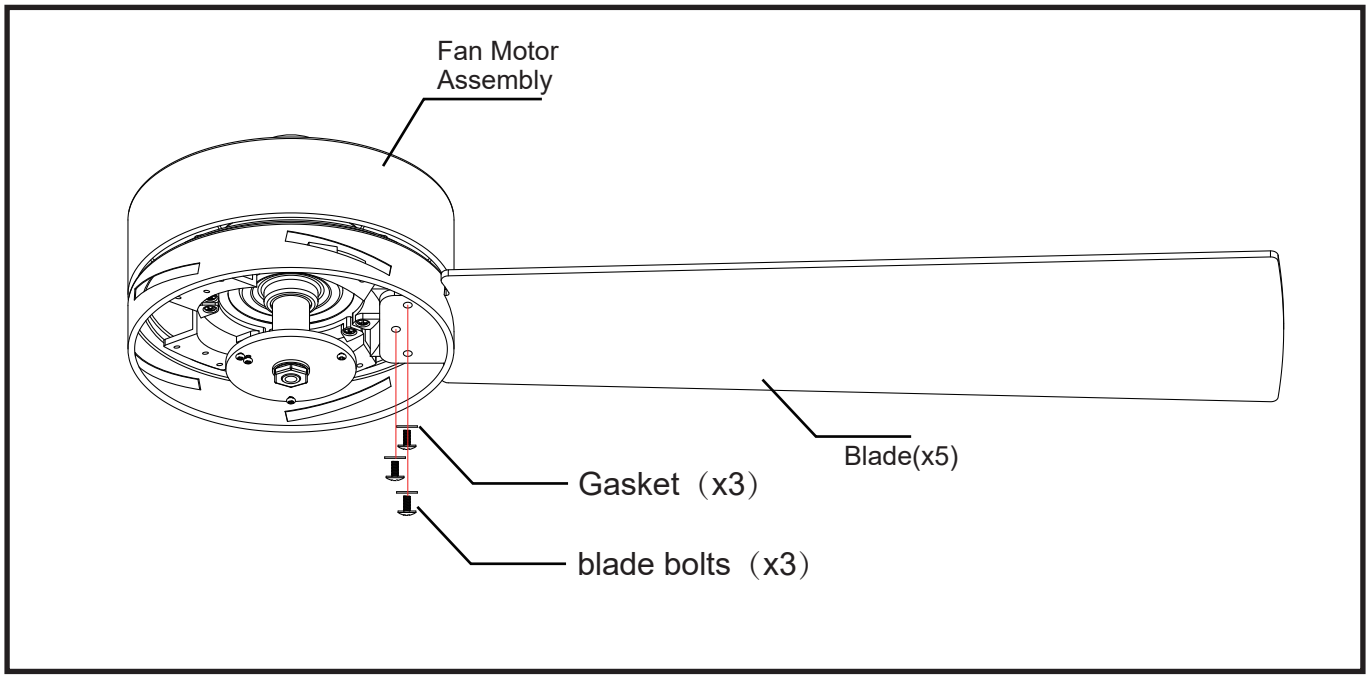

Installing The Light Kit

1. Align the three slots of LED light with the holes (two big holes and one small hole) of the light's mounting plate to form the LED light kit.
2. Remove the bolts from the bottom of the fan motor assembly.
3. Feed the wire plug of the fan motor assembly through the middle of the LED light kit.
4. Connect the wire plug to the socket on the LED light kit.

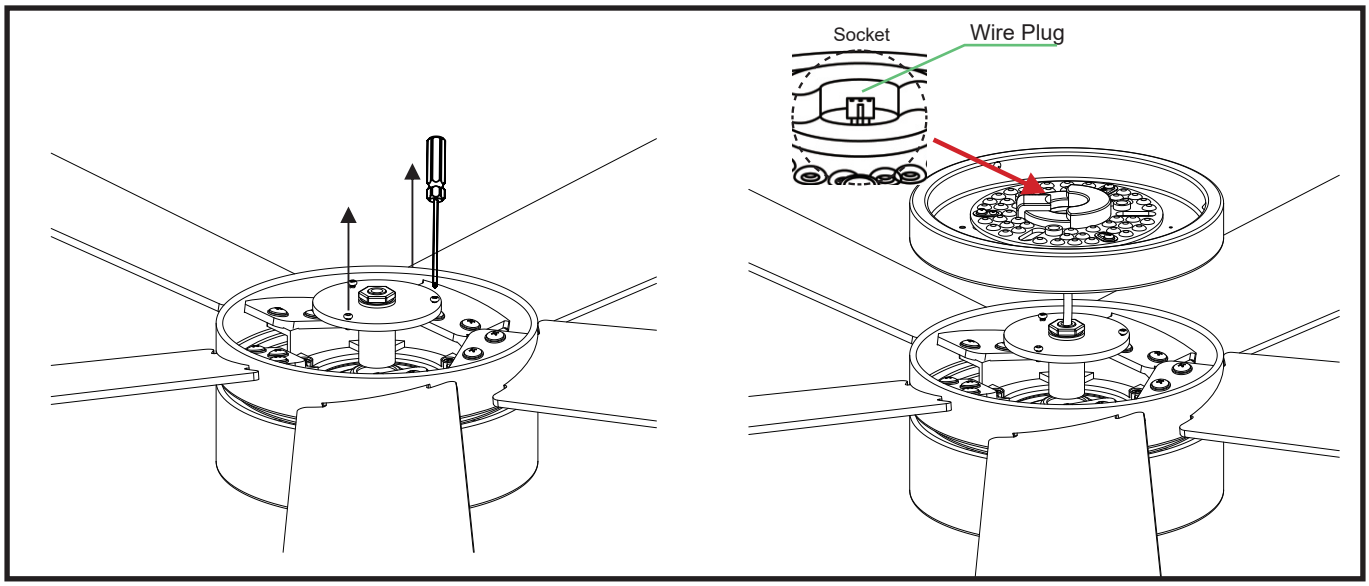

INSTALLATION

5. Position the light's mounting plate against the motor, aligning the holes (two big holes and one small hole).
6. Replace and tighten the removed bolts to secure the LED light kit into place.

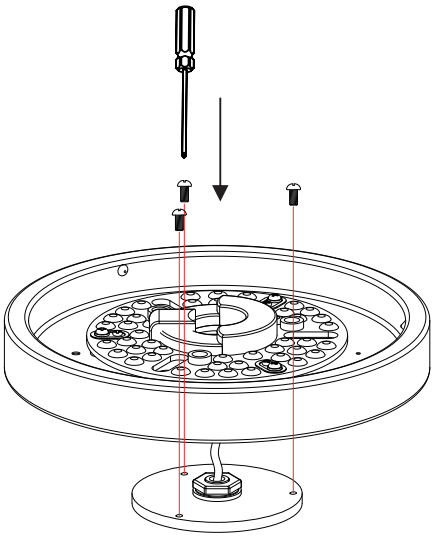

Downrod and Motor

Attaching the Downrod to the Motor

1. Remove the retaining clip and locking pin from the downrod. Do not discard them.
2. Pass the downrod through the canopy and coupling cover as shown.

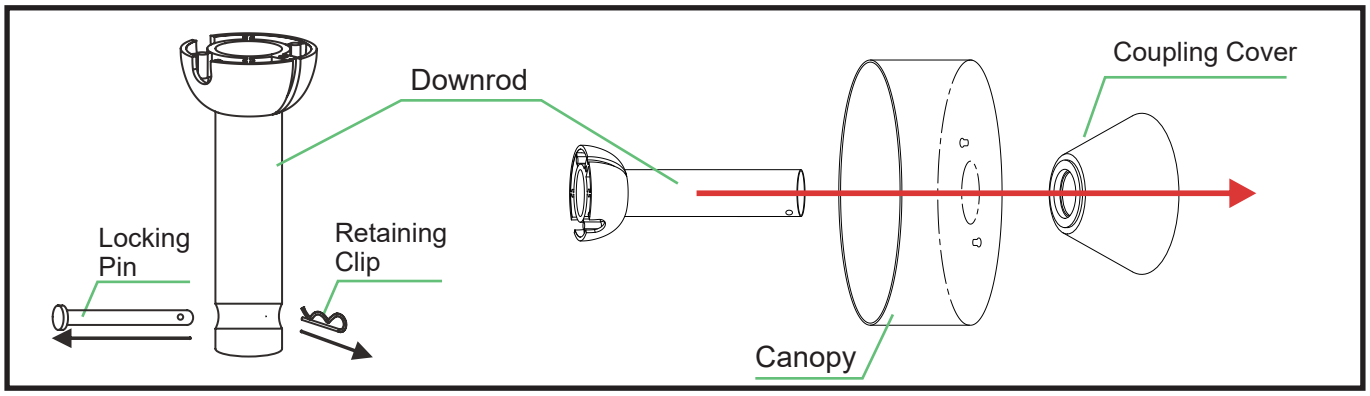

NOTE: If you choose the 10" downrod to match the height of the ceiling, detach all the other preinstalled accessories from the 5" downrod and install onto the 10" downrod as below.

a. Unscrew the two Phillips bolts from the mount.
b. Slide down the mount away from the downrod.
c. Pull the latch out of the upper slot of the downrod.
d. Install all these accessories (including the wire) onto the 10" downrod in reverse order.

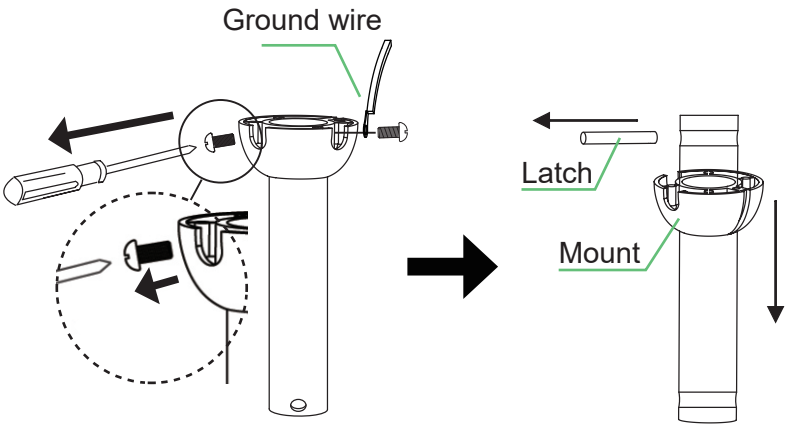

INSTALLATION

3. Remove the lock from the safety rope on the fan motor assembly.

4. Feed the rope and wires from the fan motor assembly through the downrod.

(*The safety rope can't get through the downrod until the lock is removed.)

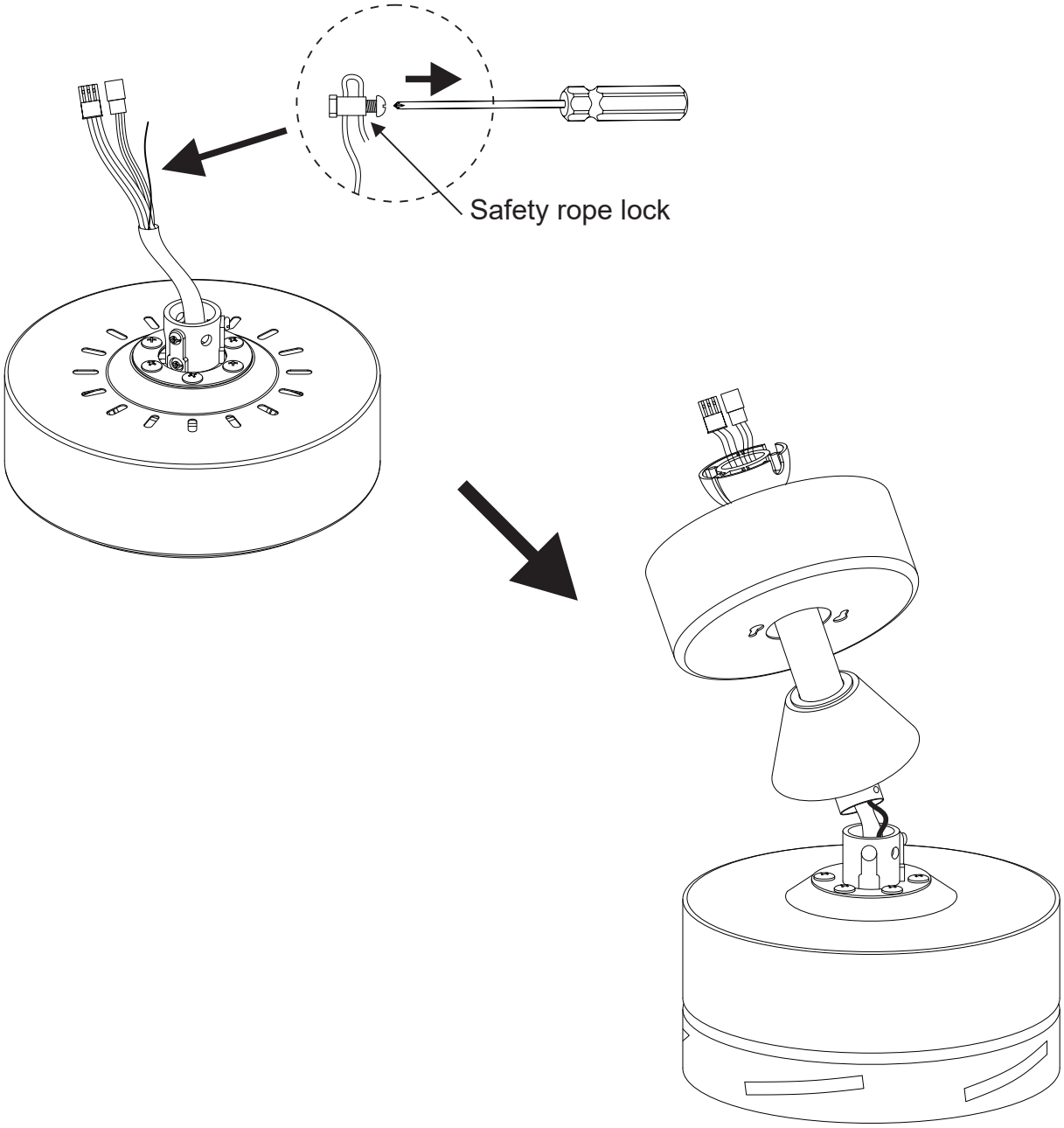

INSTALLATION

5. Loosen the two Phillips bolts at the top of the fan motor assembly.
6. Fit the downrod onto the motor's top, aligning their holes.
7. Reinsert the previously removed locking pin and retaining clip to partially fasten the downrod.
8. Retighten the two previously loosened Phillips bolts until the downrod is locked into place.

Warning

Failure to reattach the locking pin and retighten the Phillips bolts can cause the fan to fall from the ceiling during operation.

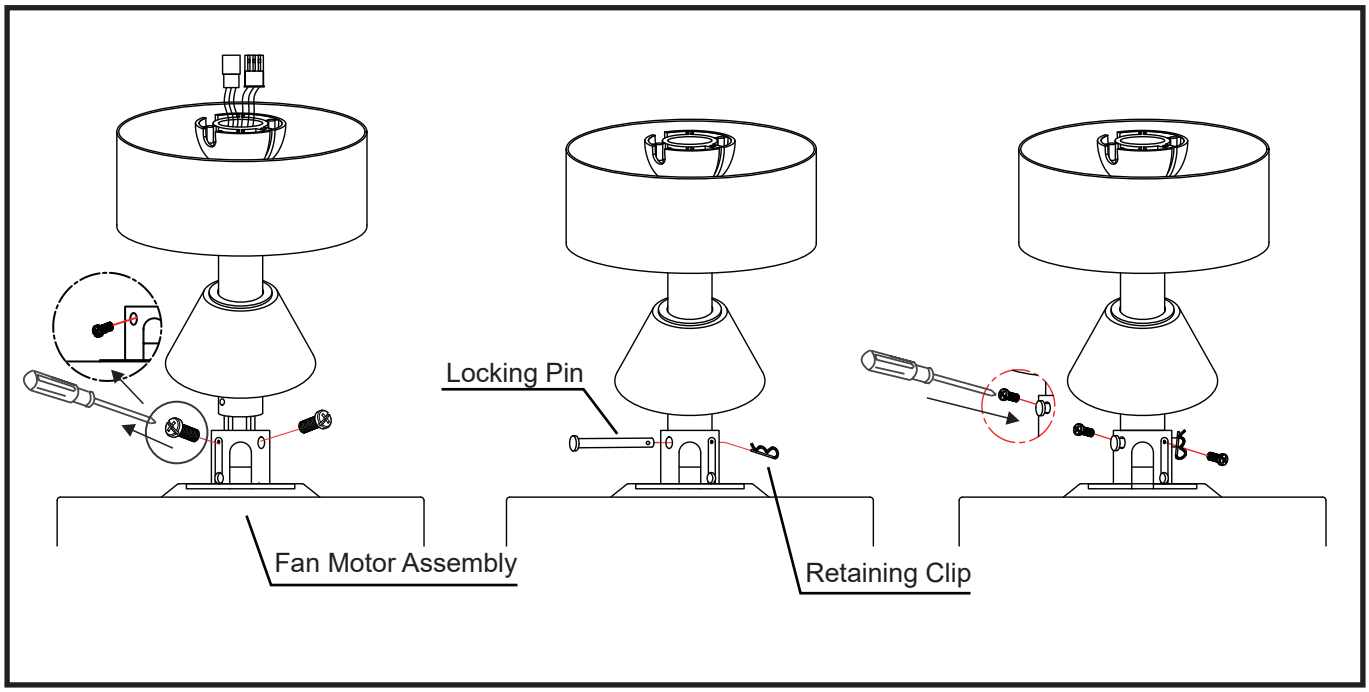

Hanging the Downrod and Motor

1. Place the downrod's mount onto the mounting bracket.
2. Rotate the entire assembly until the tab has dropped into the mount's slot and locked firmly into place. The motor assembly should no longer rotate if seated properly.
3. String the removed lock back onto the safety rope, wrap around the mounting bracket and retighten the safety rope lock to fasten the entire assembly.

INSTALLATION

Warning

Failure to properly seat the downrod can cause the fan to fall from the ceiling during operation.

***DO NOT** use the fan before ensuring it is properly secured and the motor assembly cannot rotate.*

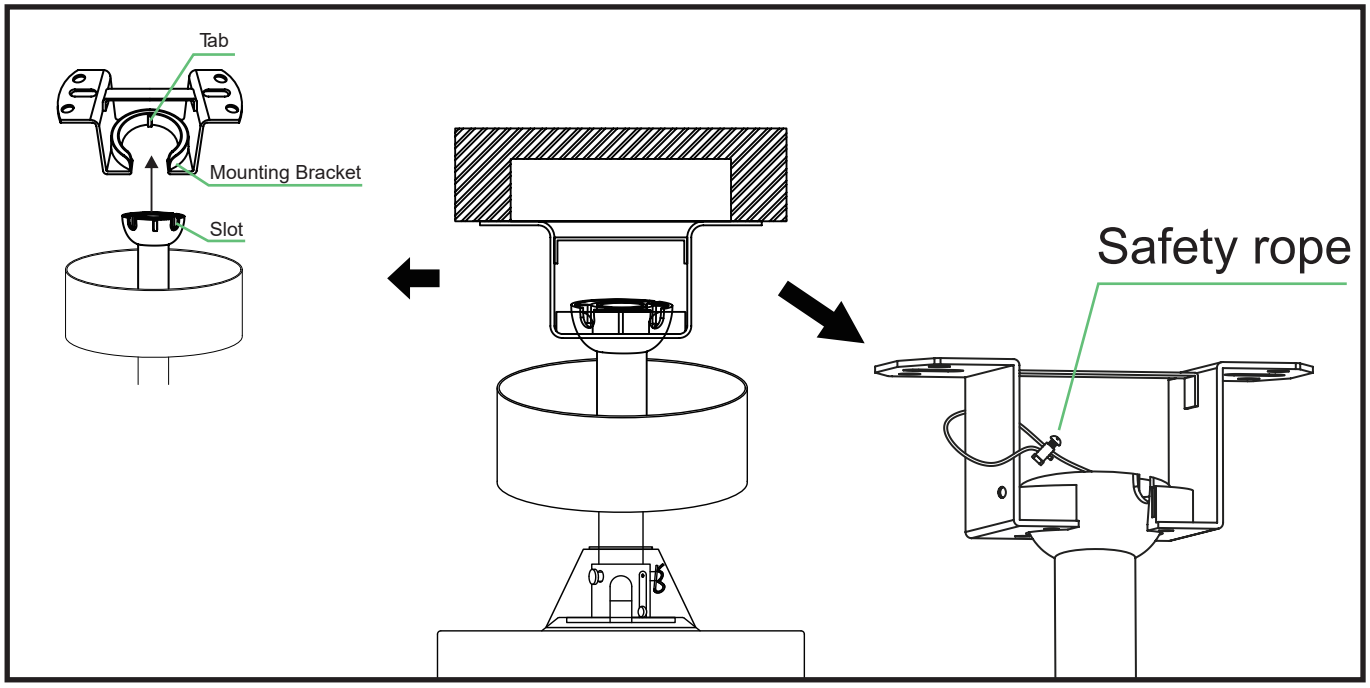

INSTALLATION

Installing The Light shade

Fit the shade onto the LED light kit, rotating until it sits well on the tabs of the light plate.

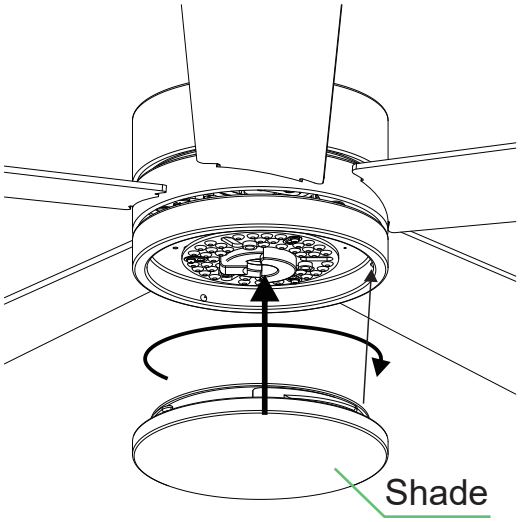

⚠ Caution

Ensure the shade is firmly connected to avoid loosening during use.

INSTALLATION

Wiring

⚠ Warning

Again, ensure that the power has been cut before working with the wiring. Use the wire nuts provided with your fan. Ensure there are no loose wires or connections and secure connectors with electrical tape.

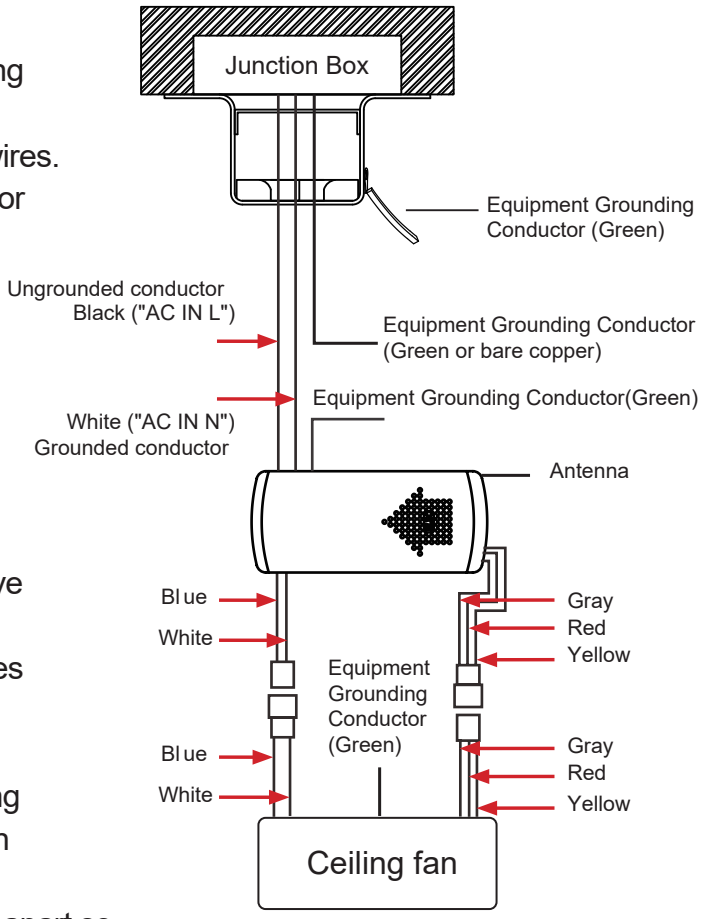

1. Insert the receiver into the mounting bracket, ensuring it faces the ceiling and its black antenna remains extended and not tangled with any of the electrical wires.
2. Connect the plugs of the receiver and of the fan motor assembly accordingly.
3. Connect the wires with the wire nuts as below.

a. Equipment Grounding Conductor: Connect the green grounding wires of the mounting bracket and of the downrod mount. Then connect the green or bare grounding copper wire of the junction box and the green grounding wire of the receiver.

b. Ungrounded Conductor: Connect the black live wires labeled “AC IN L” (Alternating Current Input Live Wire) of the junction box and of the receiver.

c. Grounded Conductor: Connect the white neutral wires labeled “AC IN N” (Alternating Current Input Neutral Wire) of the junction box and of the receiver.

d. Secure each set with the provided wire nuts, ensuring they are securely fastened by gently tugging on each connection.

e. After making the wire connections, spread the wires apart so that the white grounded conductor and the green equipment grounding conductors are on one side of the junction box, and the black ungrounded conductor is on the other side.

f. Once the splices are made, turn them upward and carefully push them up into the junction box.

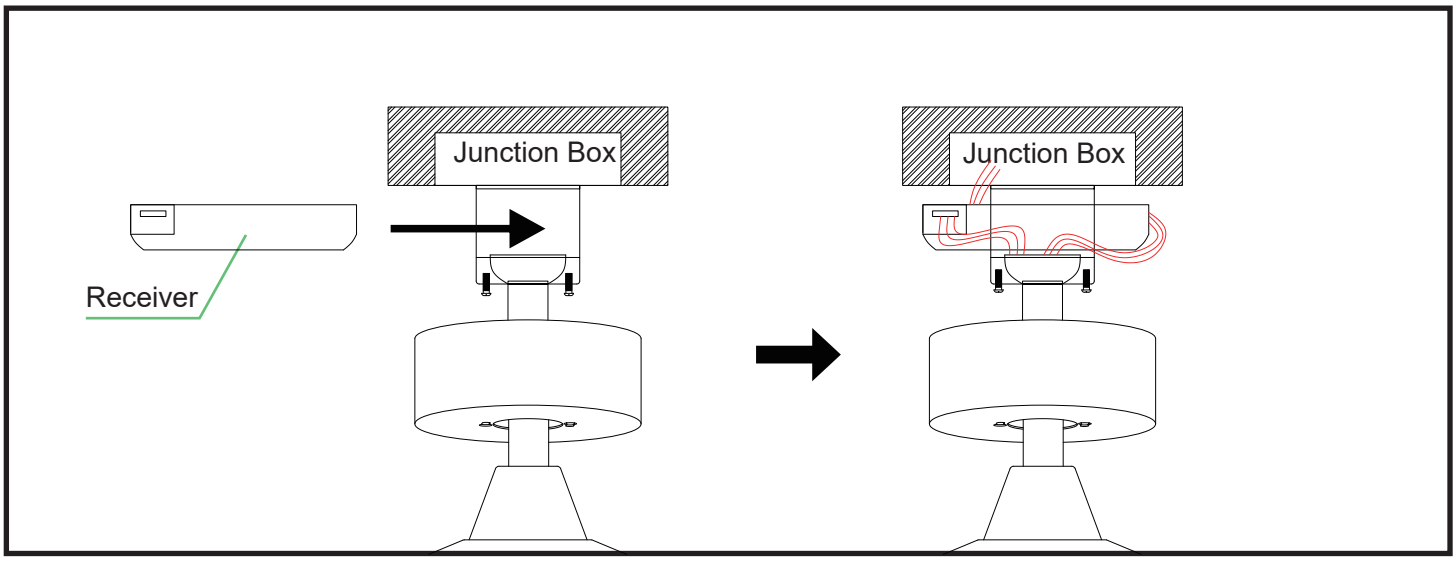

INSTALLATION

Canopy

1. Slide the canopy up to the mounting bracket.
2. Place the canopy over the bolts preinstalled on the bracket through the wide sections of the key holes.
3. Rotate the canopy until the bolts' heads lock in place at the narrow sections of the key holes.
4. Tighten the bolts as needed.

NOTE: When installing the fan, the canopy don't press the antenna (or other wire), it is easy to breakdown the wire and short-circuited.

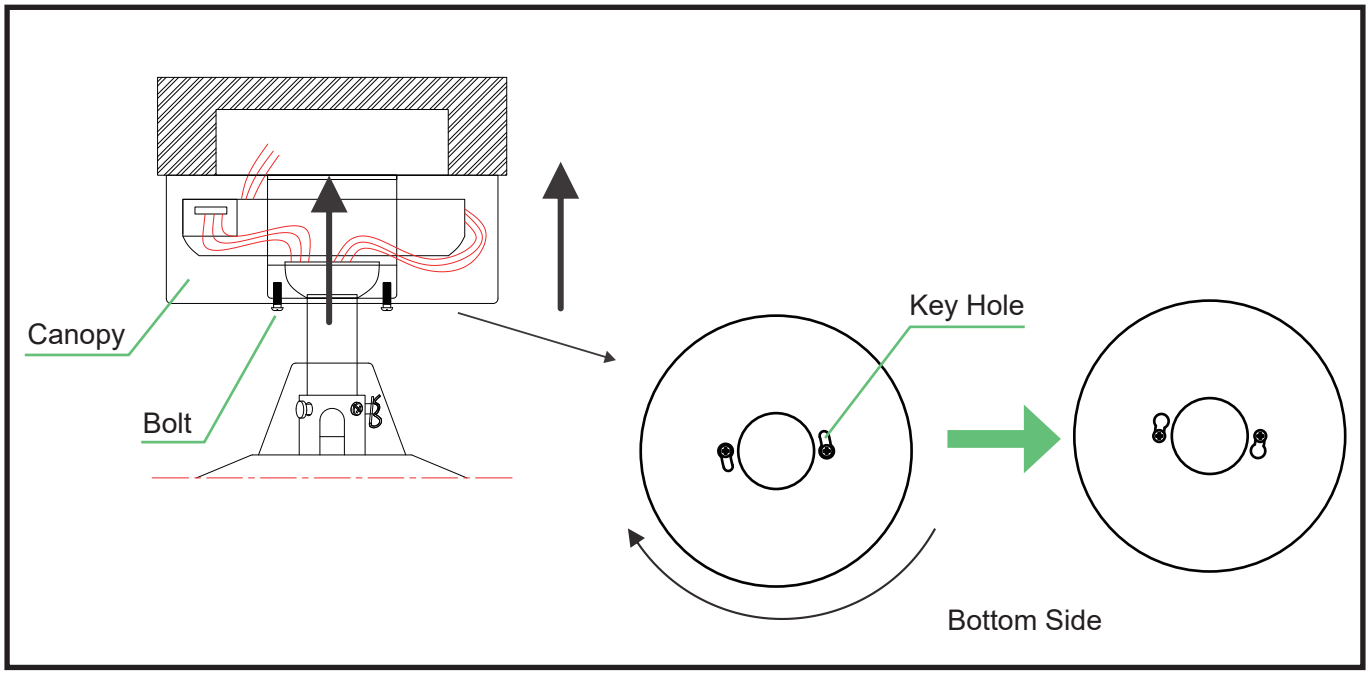

REMOTE CONTROL OPERATION

Remote Control Description

1. Restore electricity to the junction box by turning the electricity on at the main fuse box.
2. Remove the battery cover from the remote control transmitter, install the battery, and replace the cover.

Note: 1). Please use two 1.5v AAA sections to power the remote transmitter
2). If not used for a long period of time, remove the battery to prevent damage to the remote transmitter, and store the remote transmitter away from excess heat or humidity.
3).Batteries are not included in the package, please purchase separately

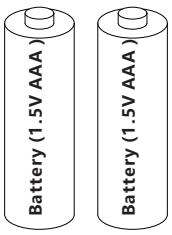

Key	Function
⏻	Turns the fan off
≋	Runs the fan in preset mode, alternately upshifting and downshifting the speed level (when pressed);
1-6	Starts the fan at the indicated speed level from low (1) to high (6)
F/R	Press the key when the fan is running, and the fan will automatically stop and rotate in the opposite direction.
1H	Runs the fan for 1 hour and then turns it off
2H	Runs the fan for 2 hours and then turns it off
4H	Runs the fan for 4 hours and then turns it off
8H	Runs the fan for 8 hours and then turns it off
☼	Turns the light on
♀	Turns the light off

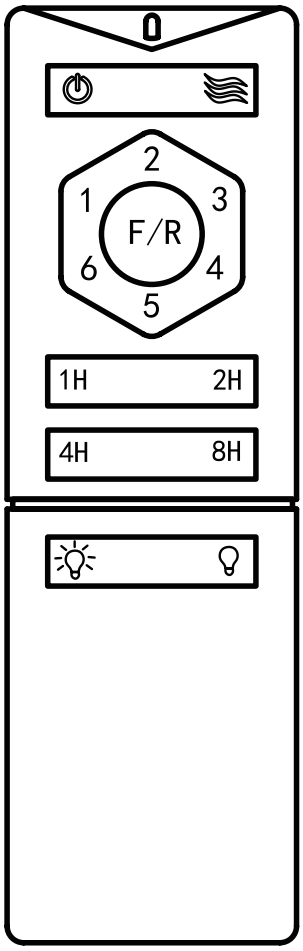

⚠ Caution

You can press "**F/R**" when the fan is running to control the rotation direction of the fan, it will **automatically stop** and **reverse rotation**

When this product does not have a lamp, when you press "☼" and"♀", it will not have the actual function.

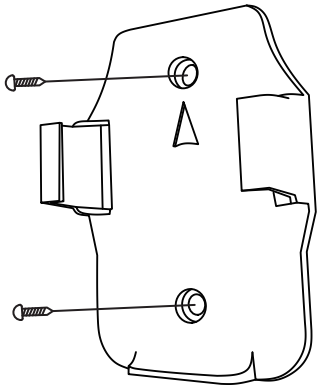

If needed, install the remote control holder onto a wall or any other suitable flat surface using appropriate fasteners. For wood or other thinner and weaker surfaces, use the provided steel screws and plastic anchors. For reinforced concrete or similar surfaces, use anchor bolts for best results.

TROUBLESHOOTING

Caution

DO NOT *bend the blade during* ***ANY*** *of the following procedures.*

Potential Problems	Common Solutions
Fan blades don't rotate.	Check fuses and/or circuit breakers and reset if needed.
	Cut off power to the fan and check its internal electrical connections.
	Replace the remote control's batteries.
	Check that the coupling cover is correctly placed and no fasteners interfere with the movement of the blades.
	Contact customer service to replace a faulty remote control.
Fan is too noisy.	Check that all fasteners are well tightened.
	Ensure the canopy housing has a short distance between itself and the ceiling.
	Upon initial installation, allow 24 hours of use for the machine to break itself in.
	Cut off power to the fan and check that the wire nut connections are not rubbing against one another or the inner housing.
	If you have installed a solid-state variable-speed control, cut off power to the fan and disconnect this control from the device. See if using the remote resolves the problem, which can be caused by erratic signals from such controls.
Fan wobbles during use.	Check that all fasteners are well tightened.
	Use the provided blade balancing kit to adjust the blades if their tips are found to be an unequal distance from the ceiling while well fastened.
	Exchange the position of the various blades.
If the emitter can not control the fan, learning code matching mode is used between emitter and receiver.	Turn on the supply power within 10 seconds and press the emitter's " ⏻ " button for 5 seconds, it can load normally after hearing a long sound "bee", which means learning successfully and it can works normally. (PS: No operation after 10 seconds of power on will stop learning mode)
	Contact customer service or a trained technician for inspection, repair, or replacement of any problematic part.

How To Use Balancing Kits

NOTE: ceiling fans tend to move during operation due to the fact that they are mounted on a Sponge cushion. if the fan was mounted rigidly to the ceiling, it would cause excess vibration, movement of a few centimeters is quite acceptable and does not suggest any problems

TO REDUCE FAN WOBBLE: PLEASE CHECK THAT ALL SCREWS WHICH SECURE THE MOUNTING BRACKET AND DOWNROD ARE SECURE

BALANCING A WOBBLING CEILING FAN

1.Check that all blades and blade arm screws are secure.
2.Most fan wobbling problems result from blade levels are unequal. Check this level by selecting a point on the ceiling above one fan blade's tip. Measure this distance. Rotate the fan until the next blade is positioned for measurement. Repeat for each blade. The distance deviation should be equal within 1/8" (0.32cm).
3.Use the enclosed blade balancing kit if the blade wobbling is still noticeable.
4.If the blade wobble is still noticeable, interchanging two adjacent (side by side) blades can redistribute the weight and possibly result in smooth operation.

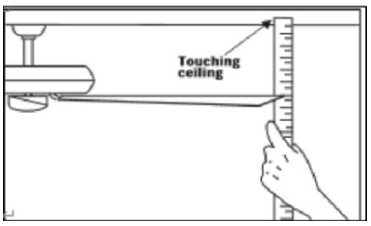

WARNING: TO REDUCE THE RISK OF PERSONAL INJURY, DO NOT BEND THE BLADE ARM WHILE INSTALLING, BALANCING THE BLADES, OR CLEANING THE FAN. DO NOT INSERT OBJECTS BETWEEN ROTATING FAN BLADES

Maintenance And Cleaning

1.Periodically cleaning your ceiling fan is the only required maintenance. Use a soft brush or lint free cloth to avoid scratching the paint. Please turn off the electricity power before you clean your fan.
2.Do not use water when cleaning your ceiling fan. It could damage the motor or the blades or even evoke an electrical shock.
3.The motor has permanently lubricated ball bearing. No need to oil

NOTE: MAKE SURE THE POWER IS OFF IN THE ELECTRICAL PANEL BOX BEFORE YOU DO ANY CLEANING OR REPAIRS

Electrical products should not be disposed of with household products. In the EU and UK, according to the European Directive 2012/19/EU for the disposal of electrical and electronic equipment and its implementation in national laws, used electrical products must be collected separately and disposed of at the collection points provided for this purpose. Locations in Australia, Canada, and the United States may have similar regulations. Contact your local authorities or dealer for disposal and recycling advice.

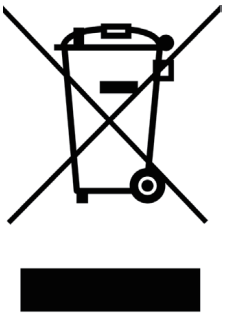

Made In China
Rev. 25 Feb. 2025