AUTOMATIC ICE MAKER

User Manual

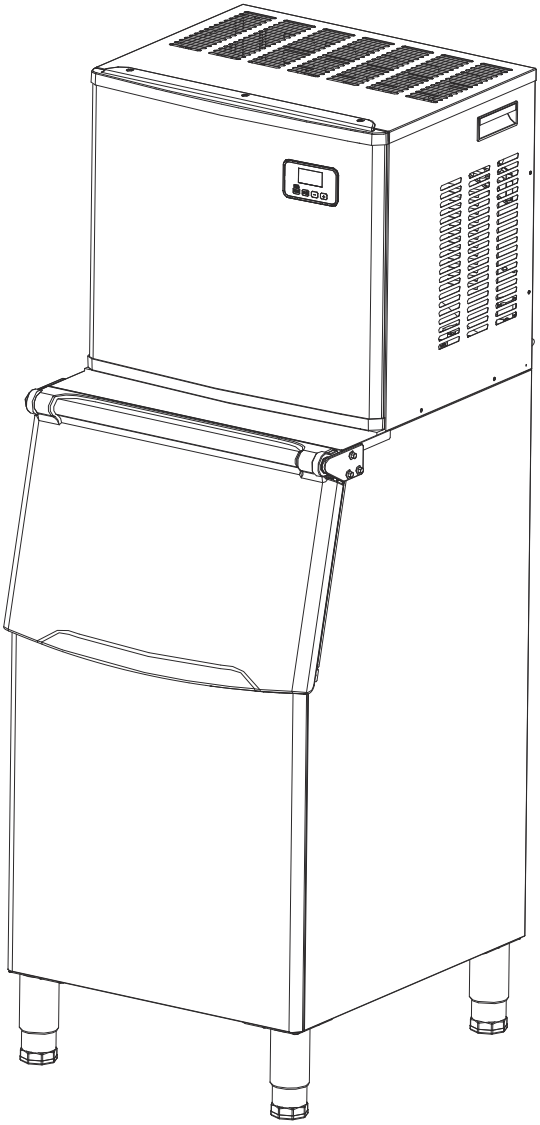

HZB-160F

Scan the QR code to watch the product videos

Tel: 888-698-2504

Web: www.electacticshop.com

Email: service@electacticshop.com

CONTENTS

IMPORTANT SAFETY----------*3*

SPECIFICATION----------*5*

DIMENSION/CONNECTION----------*5*

RATING----------*5*

GENERAL INFORMATION----------*6*

MAIN UNIT CONSTRUCTION----------6

ICE-MAKING AND ITS WATER TANK PARTS----------*6*

OPERATION PANEL----------*7*

OPERATING PROCEDURE AND MAINTENANCE----------8

UNPACKING YOUR ICE MAKER----------8

MAIN MACHINE ASSEMBLY----------8

INSTALLATION LOCATION REQUIREMENT----------9

ELECTRICAL REQUIREMENT & CONNECTIONS----------9

CLEANING YOUR ICE MAKER BEFROE FIRST USING----------10

WATER CONNECTIONS FOR YOUR ICE-MAKER----------10

OPERATION YOUR UNIT----------12

OPERATION THE ICE MAKING PROCESS----------*12*

AUTOMATIC SELF-CLEANING PROGRAM----------*13*

WIRING DIAGRAM----------*14*

NORMAL SOUNDS----------*14*

PREPARING ICE MAKER FOR LONG STORAGE----------*15*

CLEANING AND MAINENANCE----------*15*

EXTERIOR CLEANING----------*16*

INTERIOR CLEANING----------*16*

ICE MAKING PARTS CLEANING----------*16*

ICE MAKING ASSEMBLY SYSTEM CLEANING----------*18*

CLEANING SUGGESTION----------*19*

NORMAL TROUBLE SHOOTING----------*20*

CORRECT DISPOSAL OF THIS PRODUCT----------*21*

IMPORTANT SAFETY

When using electrical appliances, basic safety precautions should be followed to reduce the risk of fire, electric shock, and injury to persons or property. Read all instructions before using any appliance.

Use this appliance only for its intended purpose as described in this owner's manual.

This ice-maker must be properly installed in accordance with the installation instructions before it is used.

This unit must be positioned so that the plug is accessible. Do not run cord over carpeting or other heat insulators. Do not cover the cord. Keep cord away from traffic areas, and do not submerge in water. No other appliance should be plugged into the same outlet, and be sure that the plug is fully inserted into the receptacle.

We do not recommend the use of extension cord as it may overheat and cause a risk of fire. If you must use an extension cord, use 14AWG minimum size and rated no less than 1875 watts.

If the supply cord is damaged, it must be replaced by the manufacturer or its service agent or a similarly qualified person in order to avoid a hazard.

Disconnect the mains plug from the supply socket when not in use for a long term, where supply connection is via mains plug.

Remove power plug or disconnect from the mains before cleaning or servicing the appliance. **NOTE:** *If for any reason this product requires service, we strongly recommend that a certified technician perform the service.*

Never unplug your unit by pulling on the power cord. Always grasp the plug firmly and pull straight out from the outlet.

Do not use your unit outdoors. Keep the unit away from direct sunlight and make sure that there is enough space between the back of your unit and wall and keep the front free. Keep ventilation opening in the appliance enclosure or in the built-in structure, clear of obstruction.

Do not tip over the unit, which will cause abnormal noise and make the ice-cube size abnormal. And seriously, it may cause water leakage from the unit.

If the unit is brought in from outside in the winter season, give it a few hours to warm up to room temperature before plugging it in.

Do not use other liquid to make the ice-cube other than water.

Do not clean your ice maker with flammable fluids. The fumes can create a fire hazard or explosion.

– **WARNING:** Do not damage the refrigerant circuit.
– **WARNING:** This appliance is not intended for use by persons (including children) with reduced physical, sensory or mental capabilities, or lack of experience and knowledge, unless they have been given supervision or instruction concerning use of the appliance by a person responsible for their safety.
– **WARNING:** Children should be supervised to ensure that they do not play with the appliance.
– **WARNING**: This appliance must be earthed. And use the 110-120V/60Hz earthed power supply.
– **WARNING**:Do not store explosive substances such as aerosol cans with a flammable propellant in this appliance.
– **WARNING:** This appliance is intended to be used in household and similar applications such as
staff kitchen areas in shops, offices and other working environments;
farm houses and by clients in hotels, motels and other residential type environments;
bed and breakfast type environments;
catering and similar non-retail applications.

-  **DANGER** – Risk Of Fire or Explosion. Flammable Refrigerant Used. Do Not Use Mechanical Devices To Defrost Ice Maker. Do Not Puncture Refrigerant Tubing.

- **DANGER** – Risk Of Fire Or Explosion. Flammable Refrigerant Used. To Be Repaired Only By Trained Service Personnel. Do Not Puncture Refrigerant Tubing.

- **CAUTION** – Risk Of Fire Or Explosion. Flammable Refrigerant Used. Consult Repair Manual/Owner's Guide Before Attempting To Install or Service This Product. All Safety Precautions Must be Followed.

- **CAUTION** – Risk Of Fire Or Explosion. Dispose Of Property In Accordance With Federal Or Local Regulations. Flammable Refrigerant Used .

- **CAUTION** – Risk Of Fire Or Explosion Due To Puncture Of Refrigerant Tubing;Follow Handling Instructions Carefully. Flammable Refrigerant Used.

The ice maker should be installed in accordance with the safety standard for Refrigeration Systems, ASHRAE15. The ice maker shall not be installed in corridors or hallways of public buildings.

If the unit is with problem need to be maintained, that replacing with like components and that servicing shall be done by factory authorized service personnel, so as to minimize the risk of possible ignition due to incorrect parts or improper service.

IMPORTANT:
The wires in this mains lead are colored in accordance with the following code:

Green with or without yellow strip	Grounding
White	Neutral
Black	Live

To avoid a hazard due to instability of the appliance, it must be placed at an even or flat surface.

SPECIFICATIONS

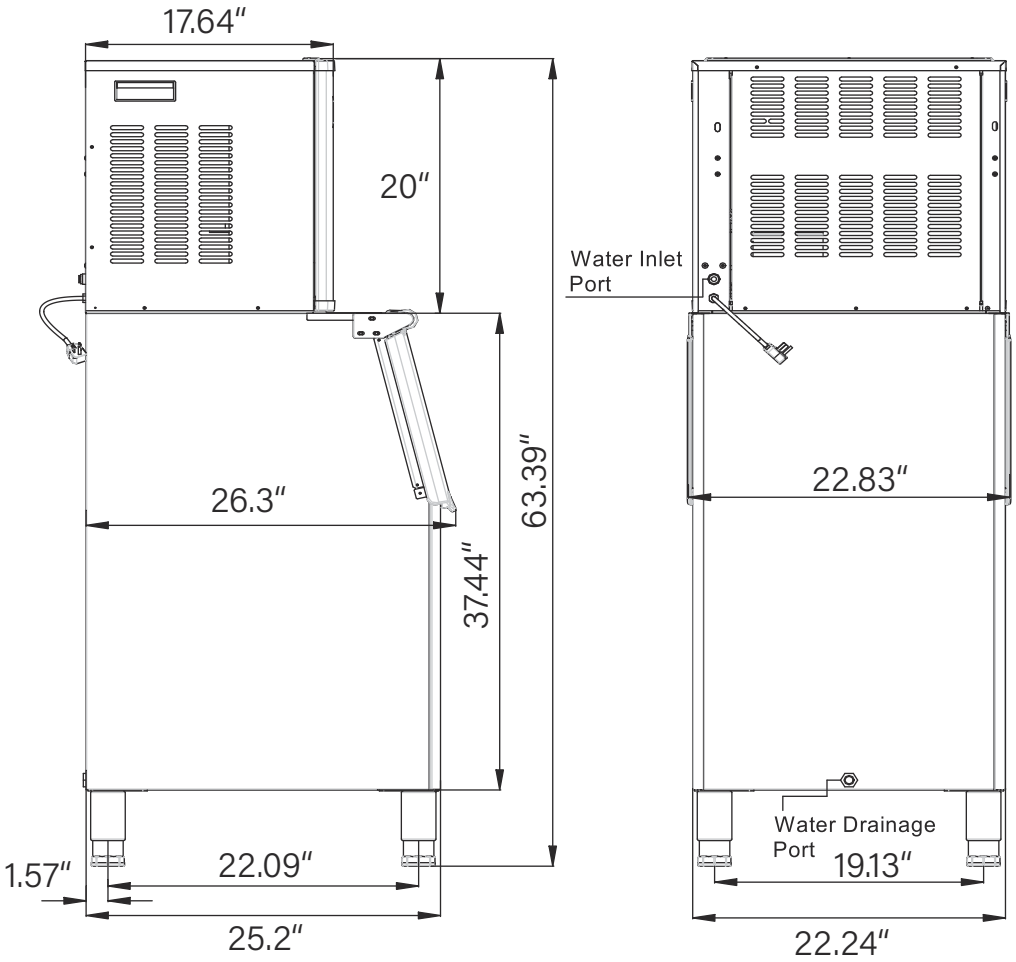

GENERAL INFORMATION

1) Main Unit Construction

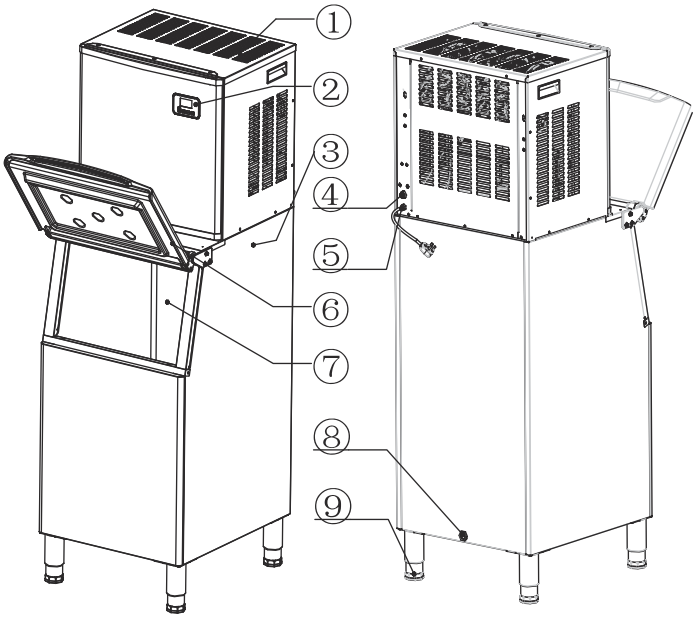

①	Vent	⑤	Power cord
②	Operation panel	⑥	Ice gate
③	Ice bin	⑦	Ice storing cabinet
④	Water inlet	⑧	Draining port

Accessory

①	White water drain pipe (3 meters long)
②	White water supply pipe (φ9.52mm diameter, 5 meters long)
③	Quick connector of the water faucet
④	Adjustable feet (4pcs)
⑤	Ice shovel

2) Ice-making and its water tank parts

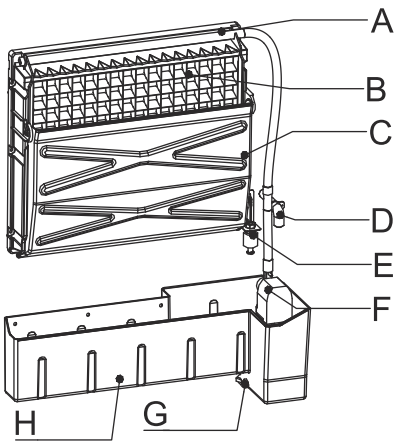

A. Water dividing pipe：with seventeen little holes, water will flow out from these little holes. And if there is no water flows out, it can be disassembled and cleaned.
B. Evaporator (ice-making module)
C. Ice full detecting board: Use to detect if the inner cabinet is full of ice or not, and to check if the ice-harvest process is over or not
D. Water supply part
E. Water level detecting switch
F. Water pump
G. Water drainage cap
H. Water tank

3) Operation panel

A. “TIMER/CLEAN” button:

Press the button once to enter the Timer setting program. Press the button for more than 5 seconds to enter the Self-cleaning program.

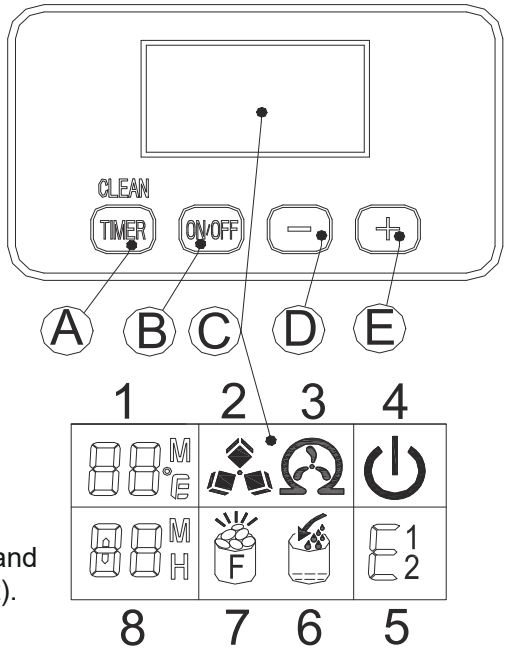

B. “ON/OFF” button:

When the unit is off, press the button to turn on the unit. During self-cleaning or normal ice-making state, press the button to turn off the unit. If the unit is set with a Timer, press the button to cancel the Timer. During ice-making, press the button for more than 5 seconds to switch to ice harvest program by force.
When the machine automatically enters the cleaning mode after it is turned on, press the “TIMER/CLEAN” button to stop the cleaning and start ice making.

C. LCD display window:

1. Ambient temperature & ice-making countdown time display: Display ice-making countdown time with M as the unit (Minute), and display environmental temperature with F as the unit (Fahrenheit).
2. Ice making & harvesting symbol: The rotating ice cube symbol means the unit is making ice. Flashing symbol means the unit is harvesting ice cubes.
3. Self-cleaning symbol
4. ON/OFF state symbol: When the unit is in the standby mode, this symbol flashes. When the unit is working, the symbol keeps lighting on.
5. Error code display: E1 means that the ambient temperature sensor is faulty. E2 means that ice-making process is abnormal or the refrigerant leaks.
6. Water flowing & water shortage symbol: The flashing arrow of this symbol means that the water is flowing in from main water supply. The whole symbol lighting up means that the machine is short of water.
7. Ice-full symbol: When the ice storing cabinet is full of the ice cubes, this symbol lights up and the unit will stop ice-making process. The machine will making ice again when you take out the ice cubes.
8. Ice-making time setting & Timer setting display: Display timer setting with H as unit (Hour). Display ice making time setting with M as unit (Minute).

D/E. “+/-" button:

Press “+” or “-” once to increase/decrease the ice-making time by 1 minute (the default setting is zero) or increase/decrease the timer time by 1 hour (the default setting is zero).
Press "+" for longer than 5s, the temperature unit will automatically switch between Fahrenheit (℉) and Celsius (℃).

UNPACKING YOUR ICE MAKER

1. Remove the exterior and interior packaging. Check if all the accessories, including the instruction manual, ice shovel, white water drain pipe, white water supply pipe, adjustable feet (4pcs), 4 ways to 3 ways quick connector, etc. are inside or not. If any parts are missing, please contact our customer service.

2. Remove the tapes for fixing the door and inner cabinet, ice shovel, etc. Roughly clean the inner cabinet & ice shovel with a wet cloth.

3. Put the ice maker on a level & flat floor, without direct sunlight and other sources of heat (i.e., stove, furnace, radiator).

4. Allow 4 hours for the refrigerant fluid to settle before plugging the ice maker in if the unit maybe fall upside down during shipping or transportation.

5. The appliance must be positioned so that the plug is accessible.

WARNING: connect to the potable water suppliers only. Only use drinking water.

MAIN MACHINE ASSEMBLY

1. Screw the four adjustable feet of the attachment into the ice bin. (Notes: The feet should not be loose.)

2. Put the ice bin on the floor and the ice-maker on the ice bin. (Notes: No shaking after finishing the installation)

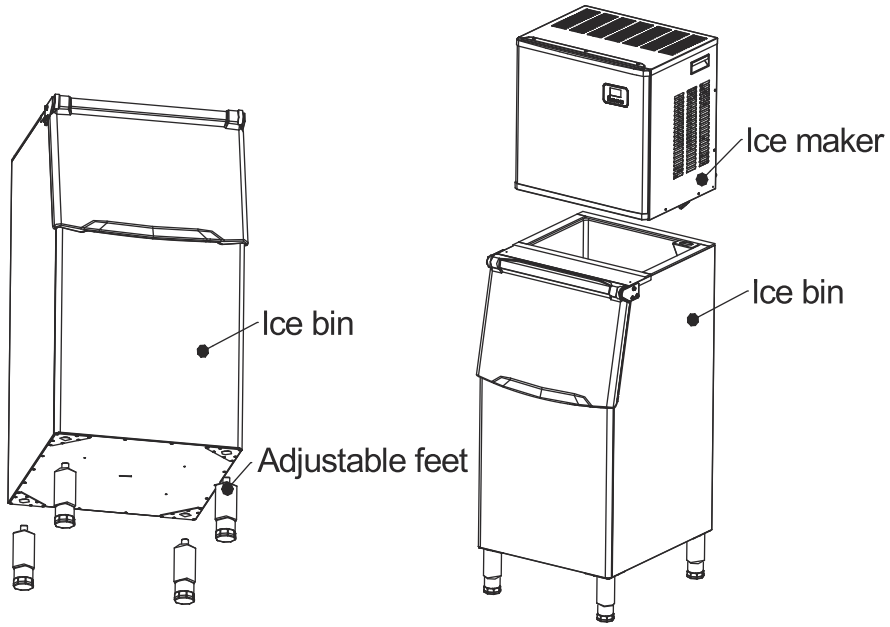

(1) (2)

INSTALLATION LOCATION REQUIREMENT

a) This unit is not for outdoor use. Keep the room temperature and inlet water temperature properly. Otherwise it will affect the ice making performance.

b) This unit should not be located near any heat resource.

c) The unit should be located on a firm & level foundation at normal counter top height.

d) There must be at least a 2-inch clearance at both sides and back for proper ventilation and for connection, and a 13-inch in front to open the door and keep good air circulation.

e) Do not put anything on the top of the ice maker.

Installation clearance
top view (1:10) (inch)

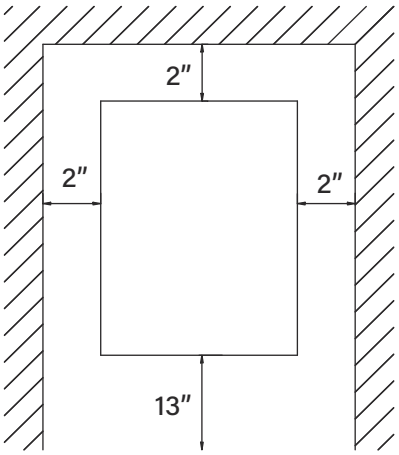

Side view (inch)

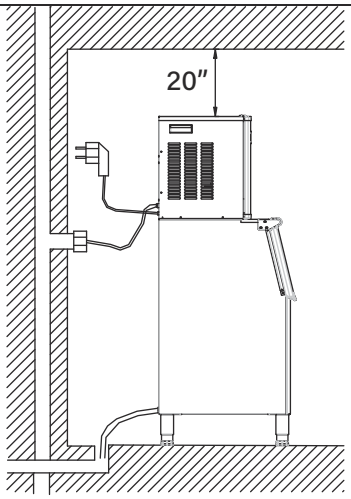

To ensure proper ventilation for your ice maker, the top of the unit must be completely unobstructed (at least 20 inches free space). The installation should allow the ice maker to be pulled forward for servicing if necessary.
When installing the ice maker, follow the recommended spacing dimensions shown above. Place electrical and water supplies and drain fixtures in the recommended locations as shown.
Choose a well-ventilated area with temperatures above 50 Fahrenheit and below 90 Fahrenheit. This unit MUST be installed in an area protected from the elements, such as wind, rain, water spray or drips.
The ice maker requires a continuous water supply with pressure 1-8 Bar. The temperature of the water feeding into the ice maker should be between 41 Fahrenheit and 77 Fahrenheit for proper operation.

ELECTRICAL REQUIREMENT & CONNECTIONS

WARNING: THIS UNIT MUST BE EARTHED.

Electrical Shock Hazard

Plug into a grounding wall outlet.

Never remove the ground prong.

Use separate power supply or receptacle.

Never use an adapter.

Never use an extension cord.

Failure to follow these instructions can result in death, fire, or electrical shock.

Before you move your ice maker into its final location, it is important to make sure you have the proper electrical connection.
It is recommended that a separate circuit, serving only your ice maker, be provided. Use receptacles that cannot be turned off by a switch or pull chain. If the supply cord or plug is to be replaced, it should be done by a qualified service engineer.
This appliance requires a standard 110-120Volt, 60Hz electrical outlet with good grounding means.

Recommended grounding method

For your personal safety, this appliance must be properly grounded. This appliance is equipped with a power supply cord having a grounding plug. To minimize possible shock hazard, the cord must be plugged into a mating grounding-type wall receptacle, grounded in accordance with the National Electrical Code and local codes and ordinances. If a mating wall receptacle is not available, it is the personal responsibility of the customer to have a proper grounding wall receptacle installed by a qualified electrician.

CLEANING YOUR ICE MAKER BEFROE FIRST USING

Before using your ice maker, it is strongly recommended to clean it thoroughly.

1. Open the ice getting door.
2. Clean with diluted detergent, warm water and a soft cloth.
3. Repeatedly cleaning the inner tank of the ice bin until the inner tank is clean. **And suggest that you should discard the ice-cube made by the first ice making cycle after cleaning.**
4. The outside of the ice maker should be cleaned regularly with a mild detergent solution and warm water.
5. Dry the interior and exterior with a clean soft cloth.

WATER CONNECTION FOR YOUR ICE MAKER

Important: Be sure to use the new hose-sets supplied with the appliance to connect to water mains and that old hose-sets should not be reused.

1、Connect the Water Supplying Hose to the Unit

Step 1: First remove the tape on the water inlet port for water supply (indicated in the following illustration “A”) located at unit back, then use your other hand’s finger to press the out circle.
Step 2: Insert the one end of the white water hose into the water inlet port, and push inward completely, and install back the clipper, then water hose connection is completed.

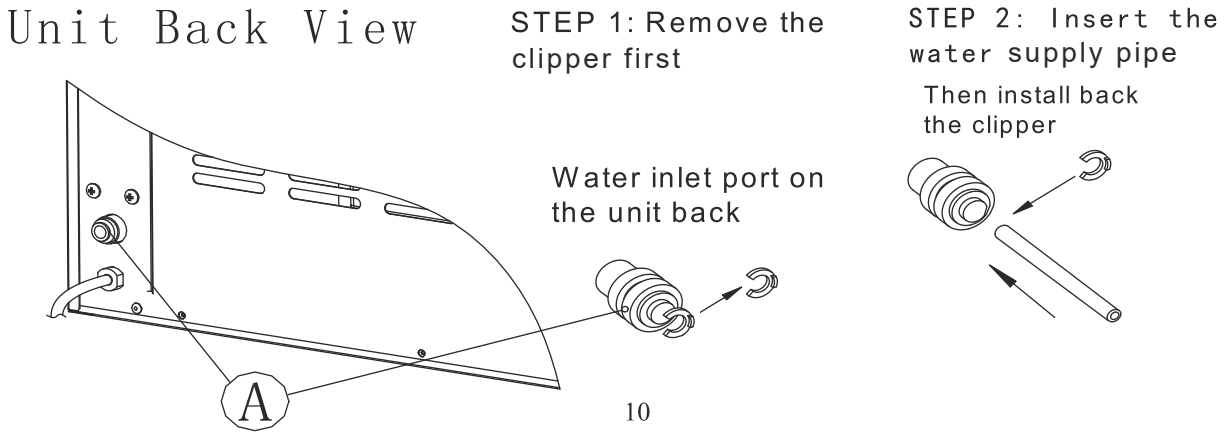

2、Connect the Water Drain Pipe

Screw the white drain pipe in the attachment into the drain of the ice bin, and connect the other end of the white drain pipe to the sewer pipe.

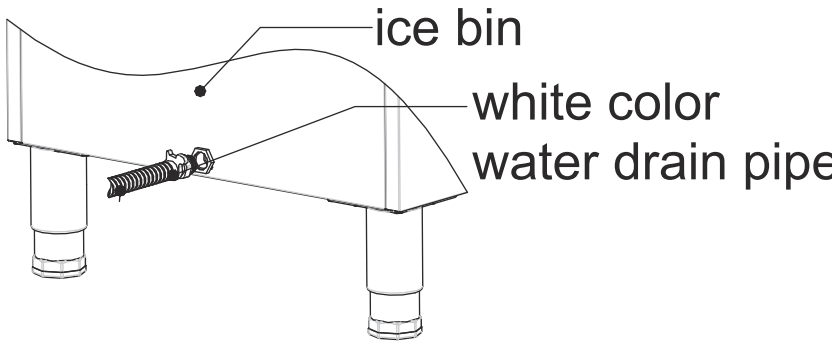

3. The ice maker is connected to the drain of the ice bin

When the host is placed on the cabinet, the drain (position A shown below) of the host needs to be connected with the hole of the drain baffle on the cabinet (lower Picture B position).

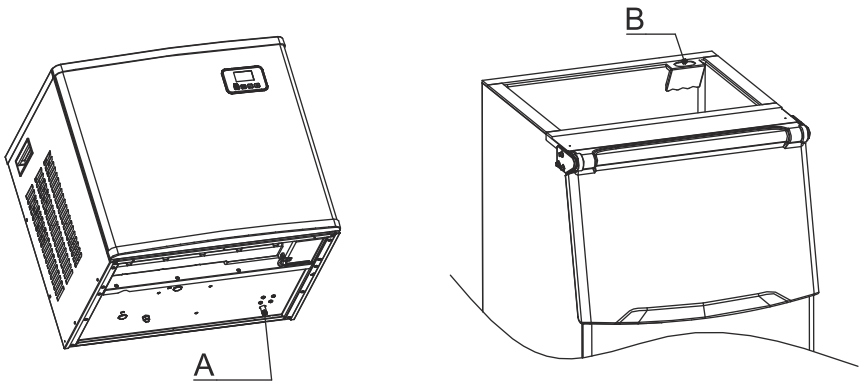

4. Connect the water hose to the water faucet of the main water supply system

First, install the supplied water quick-connector to the water faucet by screw thread; Second, remove the clipper from the water quick-connector, insert the another end of the water hose into this quick-connector port completely, then install back the clipper, also this step is completed. *Note: The water faucet should be supplied by the customer himself.*

Important: The water pressure of main water supply system must be 0.04-0.6 MPa at least.

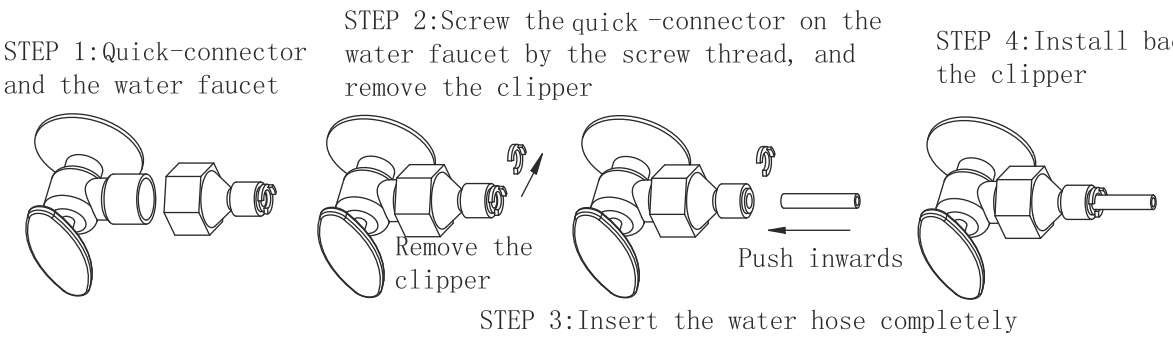

Operation Button and Display Area Diagram

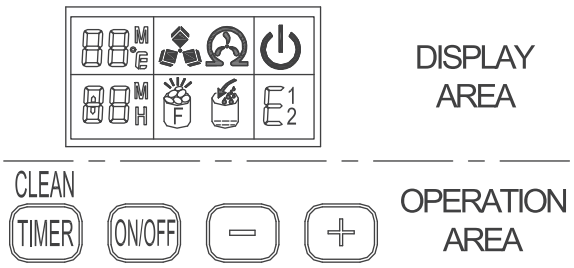

The Ice-making Process

1. Turn on the ice machine: plug the power the symbol of power will flash, press “ON”/ “OFF”, the outlet tube can input the water from water tank through magnetic valve. The machine will start self-clean after the water is enough. The symbol will revolve on the LCD. It will drain the water after 50s cleaning, add water after 50s draining, and clean again after enough water. Press “Timing/Cleaning”, it will be cancelled if during the cleaning.
   After cleaning and then starting to make ice, the symbol will be in the LCD and ice making symbol will rotate; The ambient temperature will be displayed in the upper left of the display window, “80F” means the ambient temperature is 80F, several minutes later, the flashing numbers will be displayed in the ambient temperature display area, the flashing number “10M” means it still needs 10minutes to finish this ice making cycle.
   When the machine works at the first time or the machine is shut down for more than 24 hours, it will enter the automatic cleaning program after starting up, or after making ice for more than 20 times, it will enter the automatic cleaning program.

2. Every ice making cycle finished, enter deicing process, the symbol will flash, the external pipe can add water to the water tank through the electromagnetic valve, and the arrow on the symbol will flash until the water reach the standard level, then the symbol will be extinguished, the unit enter the next ice making cycle; When the water can not reach the standard level, the symbol is always bright, the unit stop working. When water shortage, the unit needs to be restarted, otherwise it will start up automatically after 15 minutes.
   Note: Each ice making cycle is around 11-20minutes, the ice making time will be changed according to the ambient temperature and the water temperature. Especially at the first time, the ice making cycle will be longer because of the high water temperature in the water tank. But the ice-making cycle will not be over 35minutes.

3. Adjust the ice thickness; Press the “+”, “-” button on the control panel to adjust the ice thickness; The number in the left bottom of the display screen is the setting of the ice making time, default is “0”, press “+” button one time the ice making time will add one minute, the ice will be thicker; Press

the “-” button once the ice making time will reduce one minute, the ice will be thinner. Restart the machine it will go back to the default “0”.

Note: The time set currently only affects the next ice-making cycle.

4. When the  symbol lights up, the machine stops working, it will work again after you take out the ice.

5. **Shut down the unit：** While the unit is making ice, press the “ON/OFF” button on the control panel, the unit will shuts down and be into standby mode. If you press "ON/OFF" longer than 5S during ice-making, then the unit enters the deicing process directly, and this function can help remove the ice on the ice plate. evaporator "ON/OFF" to turn off the machine.

6. **Timing setting：Setting range：** 1-24 hours

   Time shutdown：When the unit is running, it can set up the timing shutdown.

   Time on：When the unit is on standby, you can set the unit with ON-TIMER.

   How to set up the timing

   Press the TIMER button, the default timing time is “1H” shown in display panel, then press “+” or “-” button to adjust the timing time you need. Every time you press the “+” button, the time add 1 hour; Press“-”button can reduce the timing time. During the process of time adjustment, the “H” in the lower corner of the number will flash, then after 5 seconds’ flashing without pressing, the “H” letter will change from flashing to always displaying, which means the timer program has been set.

   In standby condition, it displays 5H, which means the unit will start automatically after 5 hours; In ice-making condition, 5H means the machine will shut down automatically after 5 hours, the "H" in the display screen indicates that the machine currently has timing function, and the number in front of it will be smaller and smaller till zero, then the timing ends, and the machine enters the mode you need.

   How to cancel timing

   When the unit has a timing（the display screen will display XX H), press the “TIMER” button, the timing is canceled after the number on the screen and "H" are extinguished.

   When the unit has a timing, the display area in the lower left corner will display the timing time and the ice making setting time, and the display content will be switched every 5S.

7. Automatic self-cleaning program.

Turn on the ice machine: plug the power and the symbol of power ⏻ will flash. Press“ON”/”OFF”, the out tube can input the water from water tank through magnetic valve.The machine will start self-cleaning after the water is full enough. The symbol will revolve on the LCD and the time count down area displays “90M”.

Cancel the self-cleaning program: It takes about 90 minutes to complete one self-cleaning program. When the program is over, the system will be in off-state automatically. And you can also press the “ON/OFF” button on control panel to cancel the self-cleaning program by force.

Normal Sounds

Your new ice maker may make some sounds that are not familiar to you. Most of the new sounds are normal. Hard surfaces like the floor, walls and cabinets can make the sounds seem louder than usual. The following describes some kinds of sounds that might be strange to you and the reasons causing them.

- You will hear a swooshing sound when the water valve opens to fill the water tank for each cycle.
- Rattling noises may come from the flow of the refrigerant or the water in the water line. Items stored on top of the ice maker can also make noises.
- The high-efficiency compressor may make a pulsating or high-pitched sound.
- Water running from the water tank to the evaporator plate may make a splashing sound.
- Water running from the evaporator to the water tank may make a splashing sound.
- As each cycle ends, you may hear a gurgling sound due to the refrigerant flowing in your ice maker.
- You may hear air being forced over the condenser by the condenser fan. During the harvest cycle, you may hear the sound of ice cubes falling into the ice storage bin.
- When you first start the ice maker, you may hear water running continuously. The ice maker is programmed to run a rinse cycle before it begins to make ice.

Preparing the Ice Maker for Long Storage

If the ice maker will not be used for a long time or is to be moved to another place, it might be necessary to drain out all of the water in the system.

1. Allow all of the ice cubes have been ejected from the evaporator of ice maker.
2. Turn off the unit, and unplug the power cord.
3. Shut off the water supply at the main water supply.
4. Disconnect the water supply hose from the water inlet valve.
5. Pull out the water drainage cap of the water tank indicating “G” in the illustration above to drain out the water in the water tank. After all of the water has been drained out, reinstall back the water drainage cap of the water tank.
6. Then drain out all of the water from the water drain port located at the back of the unit indicating “⑧” in the illustration above.
7. Disconnect the water drain pipe to the main drain pipeline or floor drain.
8. Drop the door open to allow for circulation and prevent from mold and mildew.
9. Leave all pipes and power cord disconnected until reuse.
10. Dry the interior & wipe the outside of the unit.
11. Put a plastic bag on the unit to resist dust & dirt.

CLEANING & MAINTENANCE

WARNING: Before carrying out any cleaning or maintenance operations, unplug the ice maker from the main power supply electricity. (EXCEPTION: Ice maker self-cleaning program).
Do not use any alcohol or fume for cleaning/sanitization of the ice maker. It may cause cracks in the plastic parts.
Ask a trained service person to check and clean the condenser at least once a year, in order to let the unit work properly.
This appliance must be cleaned by the use of a water jet.

CAUTION

If the ice maker has been left unused for a long time, before the next use it must be thoroughly cleaned. Follow carefully any instructions provided for cleaning or use of sanitizing solution. Do not leave any solution inside the ice maker after cleaning.

Periodic cleaning and proper maintenance will ensure efficiency, top performance, hygiene, and long life. You may want to shorten the intervals if you have pets, or the unit is used outdoors, or there are other special considerations.

What shouldn't be done

Never keep anything instead of the ice in the ice storage bin: objects like wine and beer bottles are not only unsanitary, but also it's labels may slip off and obstruct the drain pipe.

Exterior Cleaning

The door and cabinet may be cleaned with a mild neutral detergent and warm water solution.
Do not use solvent-based or abrasive cleaners. Use a soft sponge and rinse with clean water and wipe with a soft clean towel to prevent water spots.

Stainless steel models can be discolored when exposed to chlorine gas and should be cleaned. Clean stainless steel models with a mild detergent and warm water solution and a damp cloth. Never use abrasive cleaning agents.

NOTICE: *Stainless steel models exposed to chlorine gas and moisture, such as in areas with spas or swimming pools, may have some discoloration of stainless steel. Discoloration from chlorine gas is normal.*

Interior Cleaning

For Ice Storage Bin

The ice storage bin should be sanitized occasionally. Clean the bin before the ice maker is used for the first time and reused after an extended period of time. It is usually convenient to sanitize the bin after the ice making system has been cleaned, and the storage bin is empty.

1. Disconnect power to the unit.
2. Open the door and with a clean cloth, wipe down the interior with a sanitizing solution made of mild neutral detergent and hot water(95℉ to 115℉) .
3. Rinse thoroughly with clear water. The waste water will be drained out through the drain pipe.
4. Reconnect power to the unit.

NOTICE: The ice shovel should be washed regularly. Wash it just like any other food container.

⚠ WARNING

DO NOT use solent cleaning agents or abrasives on the interior, These cleaners may transmit taste to the ice cubes, or damage or discolor the interior.

Ice Making Parts Cleaning

During the using, clean these main systems of your ice-maker periodically.

1、 Repeat above steps to clean the water tank and other inner parts of the unit.

2、 Especially for the water dividing pipe on the evaporator, when the compressor and the water pump run normally, if there is no water flowing out from the water dividing pipe or the water flowing is very small, please discharge this water dividing pipe and clean it carefully. Clean each little hole on the water dividing pipe displayed in the following illustration, make sure each hole is not clogged by anything, then install it back to the original location(Power off before cleaning, and then remove the front panel).

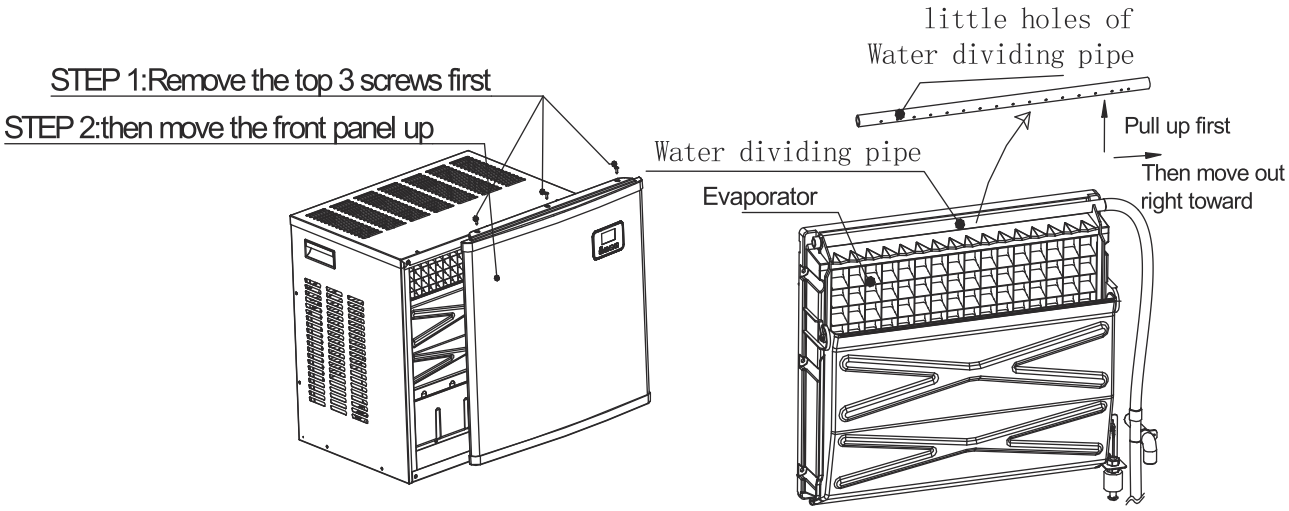

3、When ice cubes on the surface of the evaporator can't fall down easily, do not use any mechanical substance to remove it by force; Only press the "ON/OFF" button for more than 5 seconds, the unit will enter the ice melting process. After a while, big ice-cubes will fall down, then turn off the unit and unplug the power cord to clean the surface of the evaporator.

4、For the water tank and ice-full detecting plate

Also the water tank and the ice-full detecting plate is very important to keep your ice cube hygienic. Put mixture of neutral cleaner & water into a clean water jet, then spray all the inner surface of tank & the ice detecting plate. Wipe these surfaces as far as possible with a clean cloth. And then, spray the surfaces with clean water, wiping with a dry clean cloth. Then drain out the water in the water tank by pulling out the water drainage cap of the water tank indicating "G" in the illustration above. When all of the water has been drained out, reinstall the water drainage cap of the water tank back .

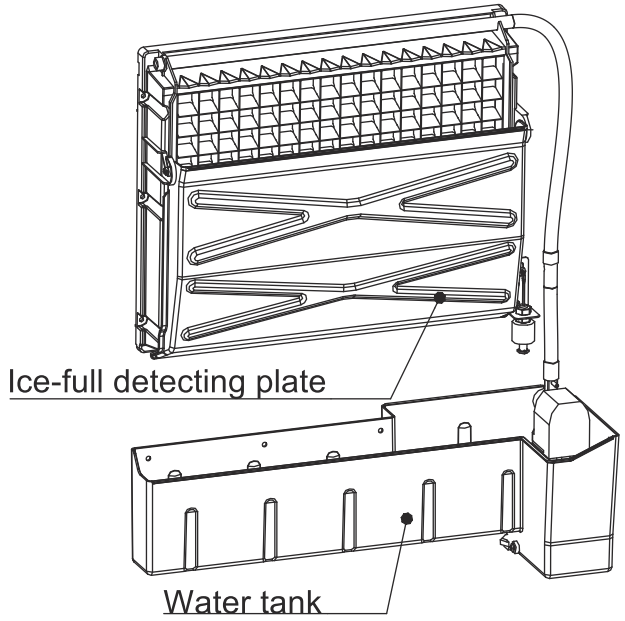

Suggestion: After cleaning the interior parts and install back to their respective positions, and return machine to work, discard first batch of ice.

Ice Making Assembly System Cleaning

Minerals that are removed from water during the freezing cycle will eventually form a hard scaly deposit in the water system. Cleaning the item regularly helps remove the mineral scale buildup. How often you need to clean the system depends upon how hard your water is. With hard water of 4 to 5 grains/liter, you may need to clean the system as often as once a week.

1. Turn off the ice maker. Keep the ice maker connect to the water supply and drainpipe.
2. Open the door and scoop out all of the ice cubes. Either discard them or save them in an ice chest or cooler.
3. Remove the front panel of the ice maker.
4. Making the cleaning solution. Please mix the Nu-Calgon Nickle Safe Ice Machine Cleaner with water to make the cleaning solution.

> **WARNING**
>
> Wear rubber gloves and safety goggles（and/or face shield）when handing Ice Machine Cleaner or sanitizer.

5. Use a plastic or stainless container with more than 5 liters capacity, mix 400 ml Nu-Calgon Nickle Safe Ice-machine Cleaner with 3.8 liters of warm water about 120℉-140℉, then divide them for 2 shares equally in 2 cups. It is better to keep the temperature of each cup of the cleaning solution.
6. Check to make sure that the Water drainage cap of the water tank has been installed properly in the slot of the tank wall. Then pour one cup of Nickel-Safe Ice Maker Cleaning Solution into the water tank.

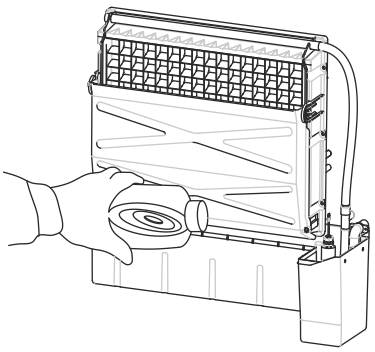

7. Turn on the power of the ice maker, then press "TIMER CLEAN" button on control panel for more than 5 seconds to enter the Self-Cleaning program. The machine will start self-cleaning after the water is enough, The symbol will revolve on The LCD, display the "90" countdown time. Stop working after 90 minutes. Press“TIMER CLEAN”, it will be cancelled if during the cleaning.
8. After a self-cleaning procedure is completed, pull out the water drainage cap of the water tank, drain the cleaning solution down to the lower ice storage bin. And drain out all of the cleaning solution completely. Then install back the water drainage cap to the slot of the water tank.
9. Repeat the step 6--8 again to clean the ice-making assembly system.

⚠ WARNING

The ice machine cleaner contains acids.
DO NOT use or mix with any other solvent-based cleaner products.
Use rubber gloves to protect hands. Carefully read the material safety instructions on the container of the ice machine cleaner.
DISCARD the first batch of ice produced after cleaning.

10. Then open the water faucet of the main water supply, let the water flow in the unit. Again press the“TIMER CLEAN”button on control panel for more than 5 seconds to enter the Self-Cleaning program. The machine will start self-cleaning after the water is filled enough, The symbol will revolve on the LCD , display The "90" countdown time.Stop working after 90 minutes. Press“TIMER CLEAN”, it will be cancelled if during the cleaning.
    During this process, it will rinse the water dividing pipe, evaporator, water pump, silicone pipe, and water tank, etc.
11. After the self-cleaning program is completed, pull out the water drainage cap of the water tank, drain the cleaning solution down to the lower ice storage bin, and slightly drain out all of the water completely. Then install back the Water drainage cap to the water tank slot tightly.
12. Repeat the step 10-11 again for 2 times.
13. Following the program above to clean the ice storage bin .
14. After this special cleaning program is finished, you can return to the regular ice-making mode. And suggest discarding the first batch of ice cubes.

Cleaning Suggestion

1) DAILY CLEANING

The ice shovel, and the door should be cleaned by yourself each day. At the end of every day, rinse the ice shovel and wipe both sides of the door with a clean cloth.

2) SEMI-MONTHLY CLEANING

The ice shovel, ice bin, water tank, the ice-full detecting plate and the surface of the evaporator are to be cleaned by yourself semi-monthly according to interior cleaning program.

3) ONCE-A-WEEK CLEANING

All the components & surfaces exposed to water or ice cubes, like ice storage bin, water tank, door, evaporator, water pump, silicone tube, water dividing pipe, etc. should be cleaned by using professional ice maker cleaner once a week.

NORMAL TROUBLE SHOOTING

Problem	Possible Cause	Solution
The whole " " symbol is always on.	No water supply	Check the main water supply pressure or check whether the water supply hose is blocked or not, adding the water pressure or cleaning the hose if necessary.
	The floating ball of the water level detecting switch is blocked, and can't be raised.	Clean the water tank and the water level detecting switch.
	Water flows out from the water tank.	Place the unit on the level position, not on the slope.
	Water flows out from the water drainage cap of the water tank.	Pull out the water drainage cap and install it back to the slot of the water tank properly.
The unit enters the ice-making process, but no water flowing in the unit, and the whole " " symbol is on.	Water supplying hose breaks down, or water flows in very slowly.	Check the main water supply pressure or check whether the water supply hose is blocked or not, adding the water pressure or cleaning the hose if necessary.
The water pump is working, but no water flows out from the water dividing pipe.	The little holes on the water dividing pipe are blocked.	Clean these little holes.
The transparency of the ice cube is not very good.	Water quality is bad.	Change the water supply, or use the water filter to soften or filter the water.
Ice cube shape is irregular.	Water quality is not good or the water tank is very dirty.	Clean the water tank, and change with new water.
	Some of the little holes on the water dividing pipe are blocked.	Clean the water dividing pipe, and make sure all nine holes are unclogged.
Ice cube is very thin.	The ambient temperature is too high.	Move the unit to low temperature space, or lengthen the time of each ice making cycle.
	Air circulation around the unit is not good.	Make sure there is more than 20CM space between the unit back & front and the obstacle.
Ice cube is too thick.	The ambient temperature is too low.	Reduce the time of each ice-making cycle.
" F " indicator is on	The ice storage bin is full of the ice cubes.	Take out some ice cubes.
Ice making cycle is normal, but there is no ice cube produced.	The temperature of ambient or the water in the water tank is too high.	Move to a place with a temperature lower than 90 Fahrenheit, and change to the lower temperature's water.
	Refrigerant leakage	Need a technical serviceman to maintain.
	The cooling system tube is clogged.	Need a technical service person to maintain.

ERROR INDICATOR

a) Temp sensor breakdown----- Display E1 in digital panel.

b) The machine not making ice or the gas leakage ----Display E2 in digital panel

c) Magnetic control switch is cut off---- “ F ” light will be on when plugging on or just turn on the unit. And it will delete the breakdown display if this switch is electrically shorted.

d) During the ice-making process, press the “ON/OFF” button for more than 5 seconds, and the unit start to enter the ice-harvest program. And after the ice-harvest program, it continues to enter the ice-making process.

Correct Disposal of this product



This symbol on the product or in its packing indicates that this product may not be treated as household waste.Instead, it should be taken to the appropriate waste collection point for the recycling of electrical and electronic equipment. By ensuring this product is disposed of correctly, you will help prevent potential negative consequences for the environment and human health which could otherwise be caused by the inappropriate waste handling of this product. For more detailed information about the recycling of this product, please contact your local council, your household waste disposal service, or the shop where you purchased the product.

ROWAN ELECTRIC APPLIANCE LLC

8:30am-5:30pm P.S.T.
Monday to Friday

Thank you for purchasing this product! If you have any questions about the product such as missing parts, damaged products, product assembling and operation, please contact us via customer service team:

Tel: 888-698-2504

Web: www.electacticshop.com

Email: service@electacticshop.com