LOS FLEXI

LFC18-10-BN One-Piece Toilet

FEATURES

LFC18-10-BN



- One-Piece Toilet
- Elongated Toilet Bowl
- 18-Inch Height Seat
- Quick-Release Toilet Seat
- Powerful Siphon Flush
- Chrome, Dual-Flush Push Button
- Fully Skirted Design
- Easy-to-Clean Gloss Bone Finish
- Installation Kit Included

SPECIFICATIONS

Brand	Los Flexi	**Dimensions**	24 7/8" L * 15 1/8" W * 28 1/2" H
Model	LFC18-10-BN	**Installation Type**	Floor Mounted
Color	Bone	**Seat Material**	Polypropylene
Bowl Material	Ceramic	**Flush Type**	Siphon Flush
Bowl Shape	Elongated	**Water Usage**	1.0 / 1.28 GPF
Net Weight	97 LB	**Water line**	Accept 1/2" & 7/8"
Bowl Height	17 5/16"	**Flush Valve Size**	2"
Seat Height	18 1/4"	**Trayway Diameter**	2"
MaP Score	800g	**Country of Origin**	China
Rough-In	10"	**Warranty**	Limited 2-Year Warranty

cs@losflexi.com

The above product images and drawings are not to scale and are for demonstration purposes only. Los Flexi reserves the right to make revisions without notice to product specifications. For the most current specifications, please go to www.losflexi.com or click on the product image on the first page.

LOS FLEXI

PRODUCT VIEWS



Top View



Front View



Side View



Back View

STANDARDS

ADA Compliant

Watersense Certified

MAP Premium Certified

Uniform Plumbing Code Certified

High Efficieny Toilet

DIMENSIONS



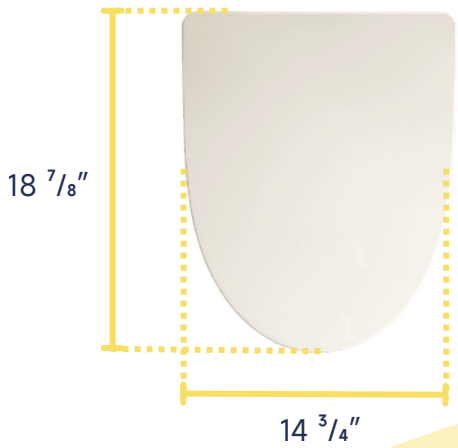

cs@losflexi.com

The above product images and drawings are not to scale and are for demonstration purposes only. Los Flexi reserves the right to make revisions without notice to product specifications. For the most current specifications, please go to www.losflexi.com or click on the product image on the first page.

LOS FLEXI

DIMENSIONS

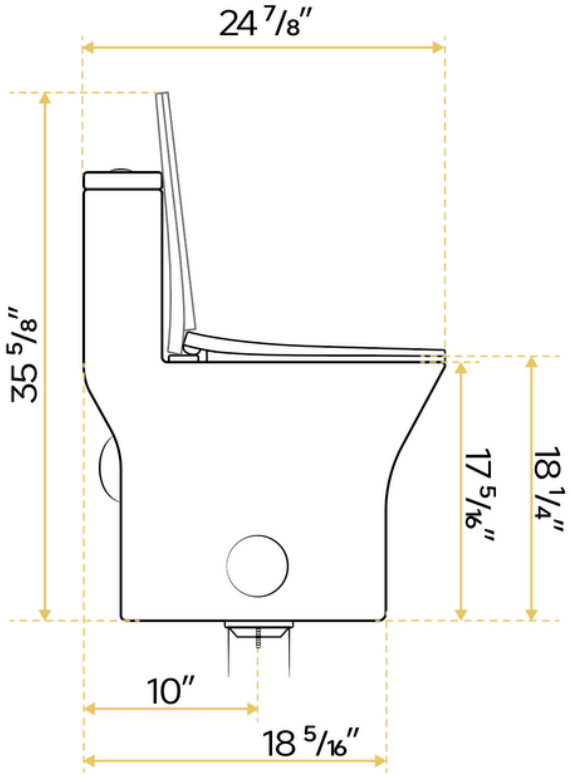

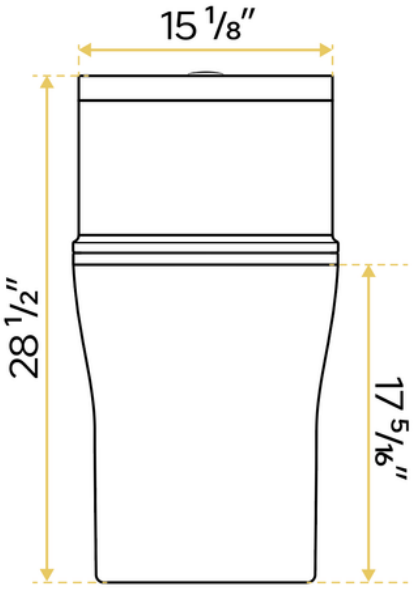

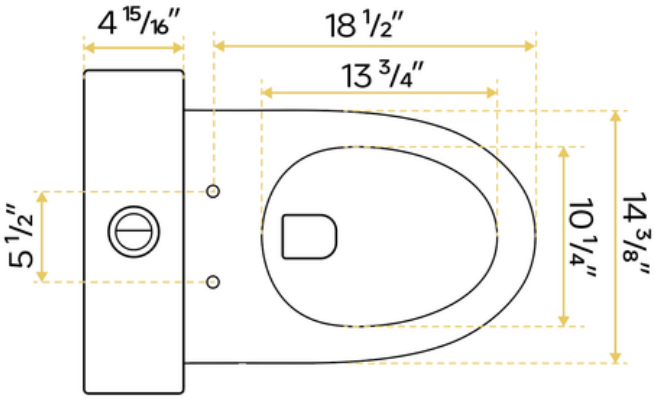

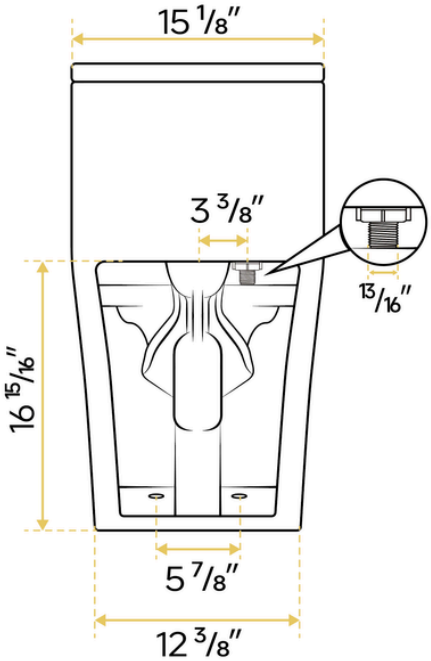

cs@losflexi.com

The above product images and drawings are not to scale and are for demonstration purposes only. Los Flexi reserves the right to make revisions without notice to product specifications. For the most current specifications, please go to www.losflexi.com or click on the product image on the first page.

LOS FLEXI

PACKAGE INCLUDES



One-Piece Toilet
(Pre-installed Toilet Tank Components)



Toilet Seat & Lid



Push Button



Seat Bolt Kit



Wax Ring & Bolts



Adapter



Side Hole Cover



User Manual

cs@losflexi.com
The above product images and drawings are not to scale and are for demonstration purposes only. Los Flexi reserves the right to make revisions without notice to product specifications. For the most current specifications, please go to www.losflexi.com or click on the product image on the first page.