INSTALLATION INSTRUCTIONS

Bathroom Vanity

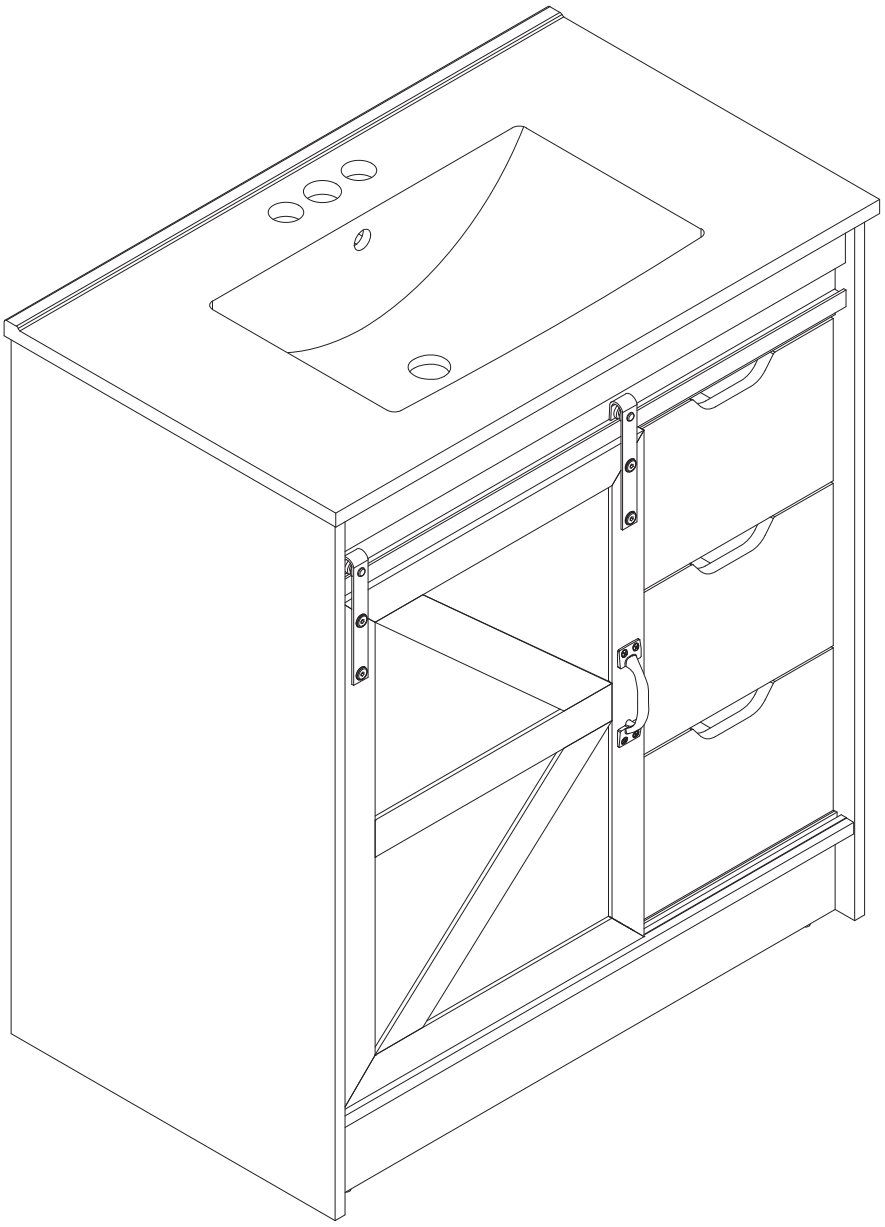

Drawings may not accurately depict product contours.



Prior to Installation:

- **Upon receipt, carefully inspect the product to ensure it is not damaged and that all parts are included. If any items are damaged or missing, please contact us immediately.**
- **Due to the large size and heavy weight of the bathroom vanity, installation is recommended to be performed by two adults. Install the product on a protected surface, such as a carpet or padded area, to prevent damage.**
- **This product is intended for residential indoor bathroom use only.**
- **Do not modify the product structure. Any modification may result in damage, personal injury, or void the warranty.**

General Recommendations:

Read all installation instructions carefully before beginning installation, and follow the instructions provided.
Wear appropriate safety equipment, such as gloves and safety glasses, and use proper tools during installation.

INSTALLATION INSTRUCTIONS

Exploded View

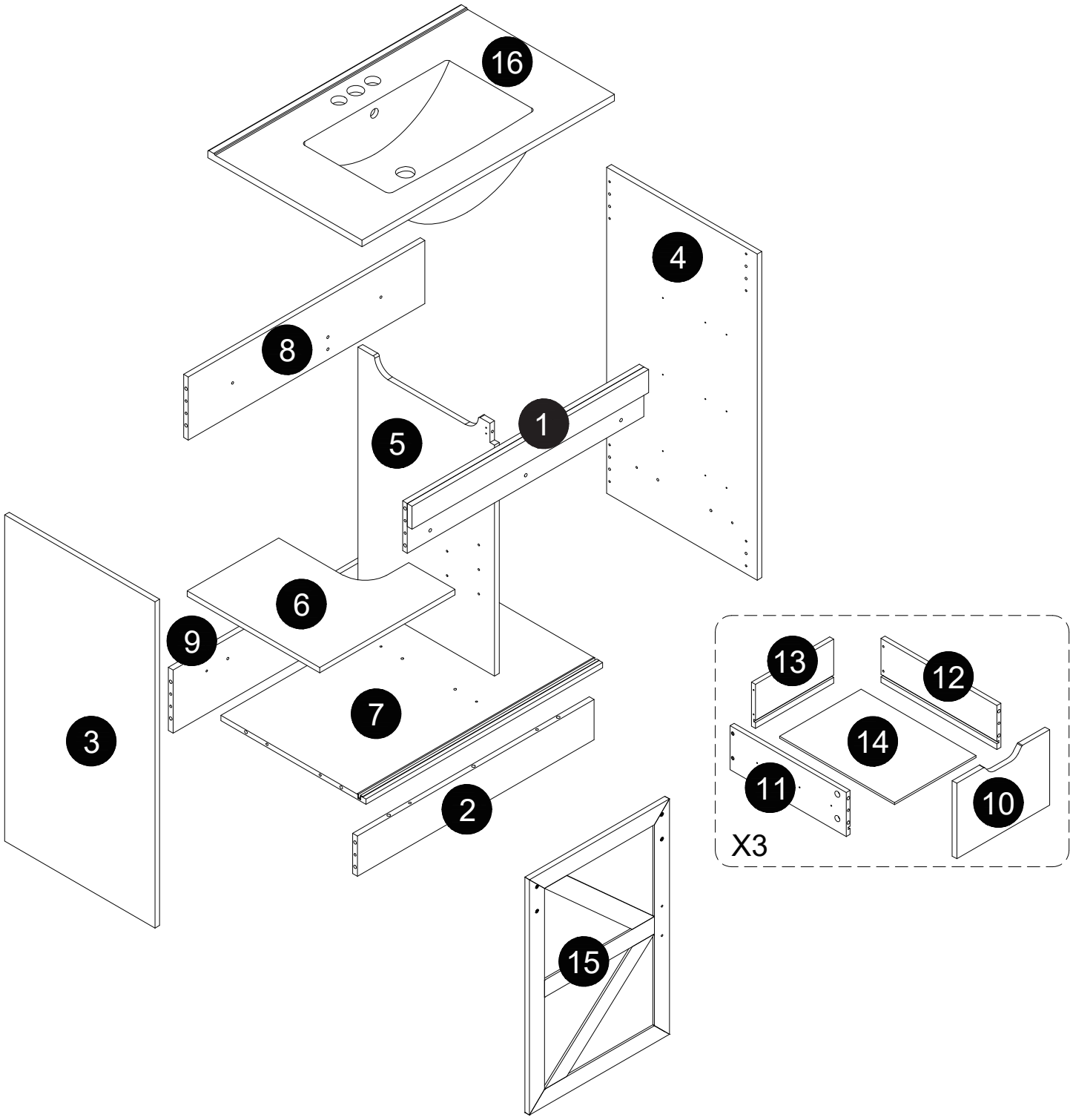

Drawings may not accurately depict product contours.

INSTALLATION INSTRUCTIONS

Vanity Components

1 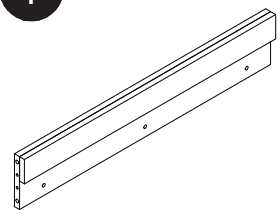 1PC	2 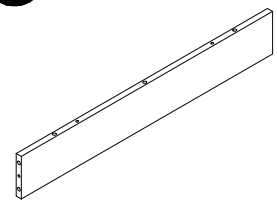 1PC	3 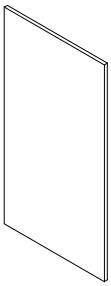 1PC	4 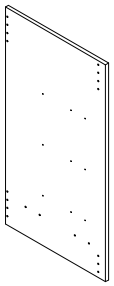 1PC
5 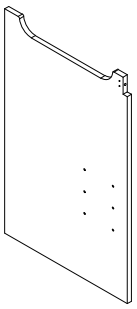 1PC	6 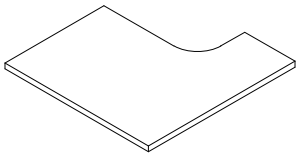 1PC	7 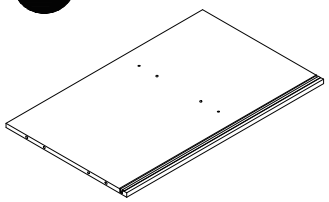 1PC	8 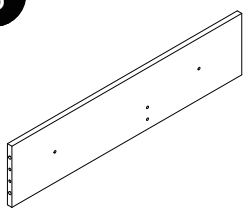 1PC
9 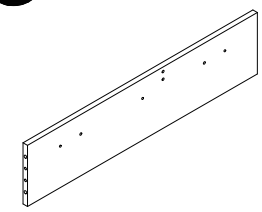 1PC	10 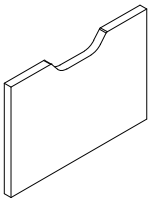 3PCS	11 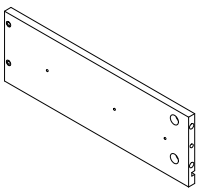 3PCS	12 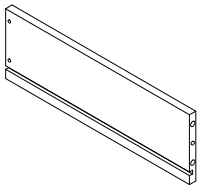 3PCS
13 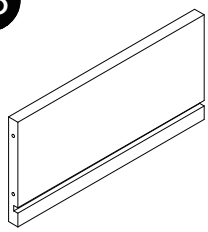 3PCS	14 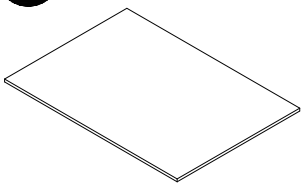 3PCS	15 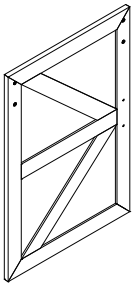 1PC	16 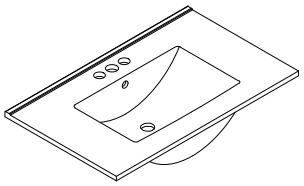 1PC

Drawings may not accurately depict product contours.

INSTALLATION INSTRUCTIONS

Hardware List

A	X40+1
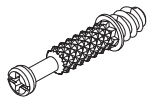	
Ø0.24" x 1.34"	

B	X40+1
	
Ø0.59" x 0.37"	

C	X31+1
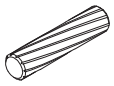	
Ø0.24" x 1.18"	

D	X4
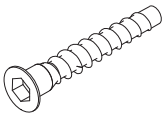	
Ø0.24" x 1.57"	

E	X2
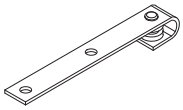	

F	X2
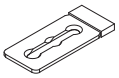	

G	X4
	
Ø0.25" x 0.59"	

H	X3
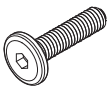	
Ø0.25" x 0.98"	

I	X4
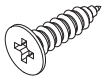	
Ø0.31" x 0.59"	

J	X4
	

K	X1
	

L	X1
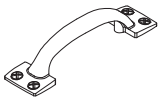	

M	X2
	
Ø0.16" x 0.71"	

N	X18
	
Ø0.16" x 0.39"	

O	X26+1
	
Ø0.16" x 0.47"	

P	X12
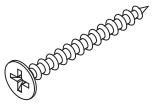	
Ø0.31" x 1.38"	

Q	X4
	

R	X2
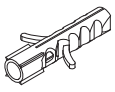	
Ø0.31" x 1.57"	

S	X2
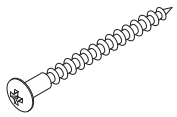	
Ø0.20" x 2.17"	

T	X1
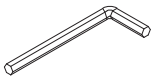	
0.16"	

U	X1
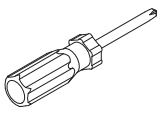	

V	X3SET
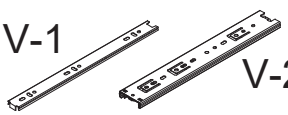 V-1 V-2	
0.47" x 1.77" (Accessories)	

W	X1
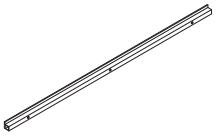	
(Accessories)	

Drawings may not accurately depict product contours.

INSTALLATION INSTRUCTIONS

Installation Instructions

1

Installation Instructions

Press the plastic part in the indicated direction to separate drawer runner V-1 and V-2 before assembly.

Remark:
While sliding the V-2 part, hold the V-1 part firmly.

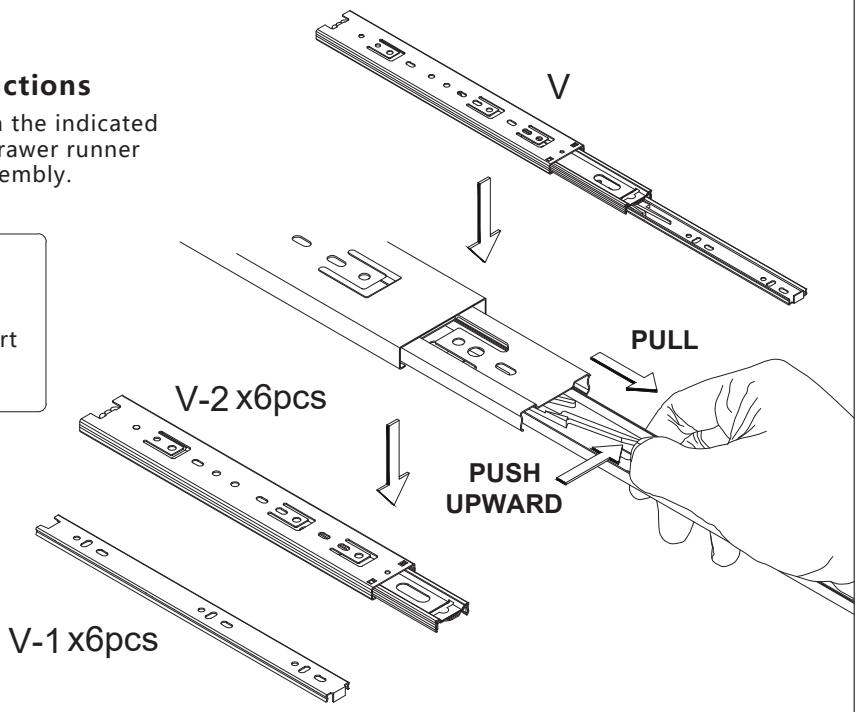

2

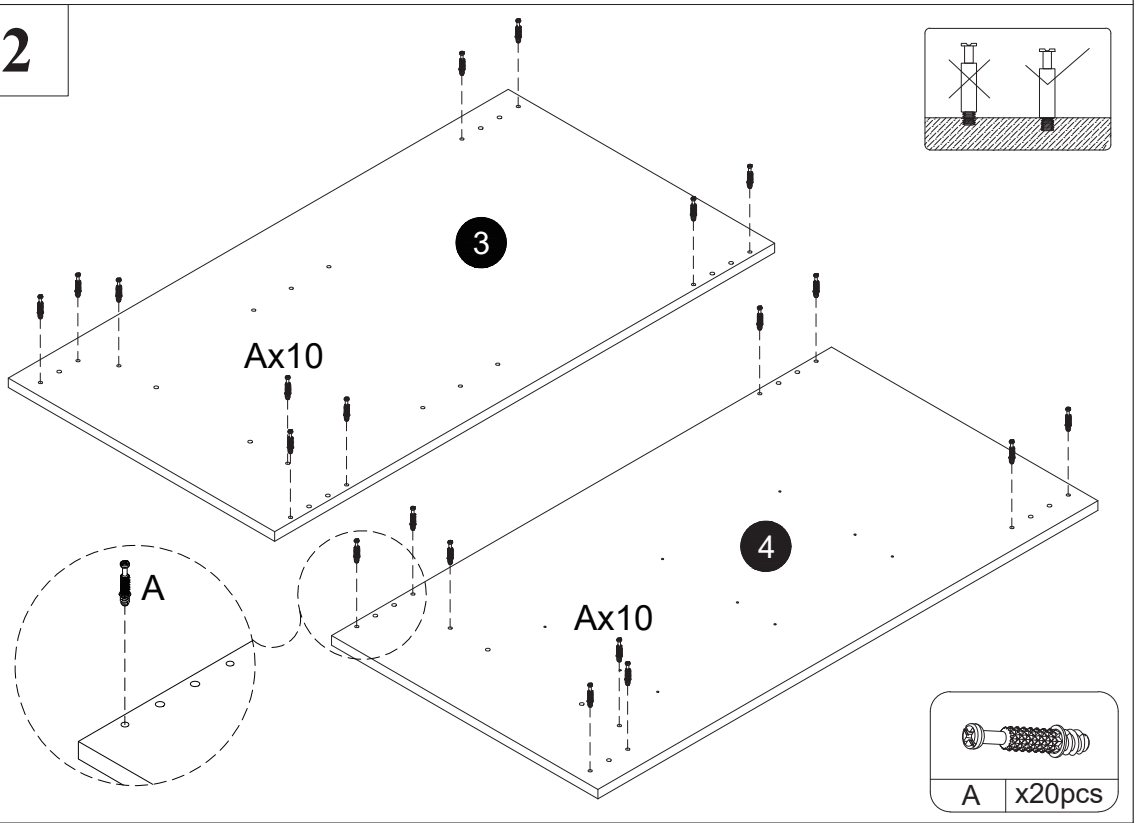

Drawings may not accurately depict product contours.

INSTALLATION INSTRUCTIONS

3

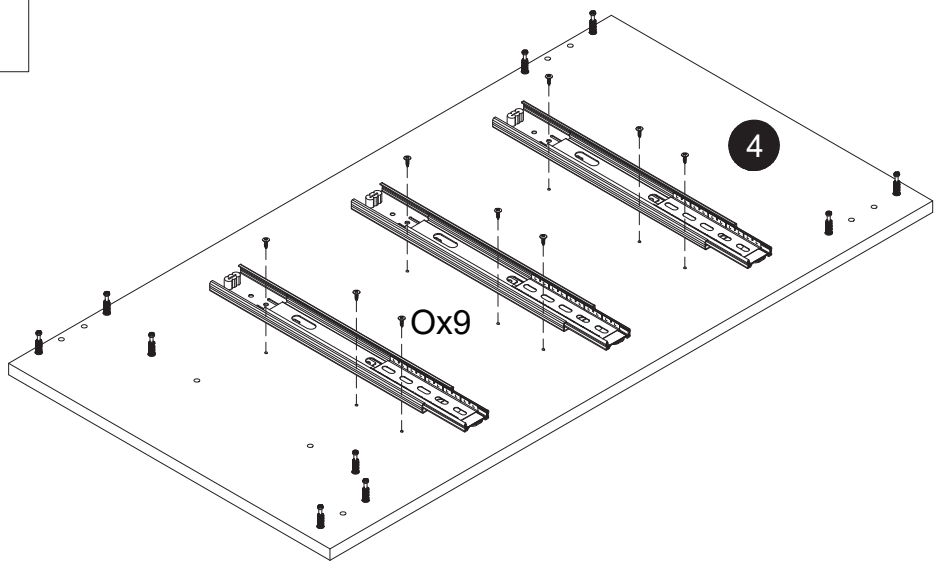

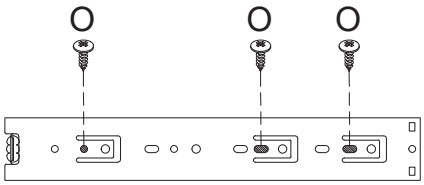

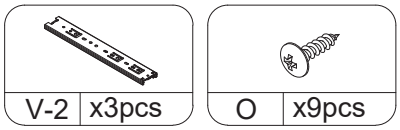

4

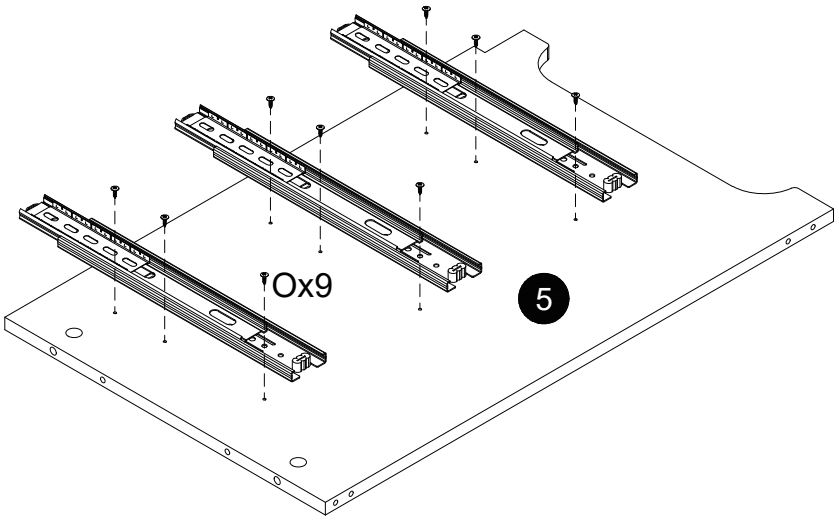

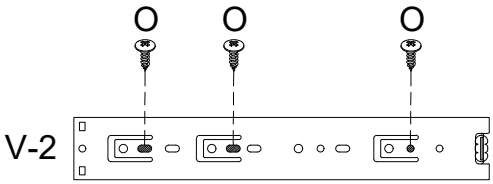

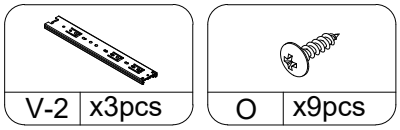

Drawings may not accurately depict product contours.

INSTALLATION INSTRUCTIONS

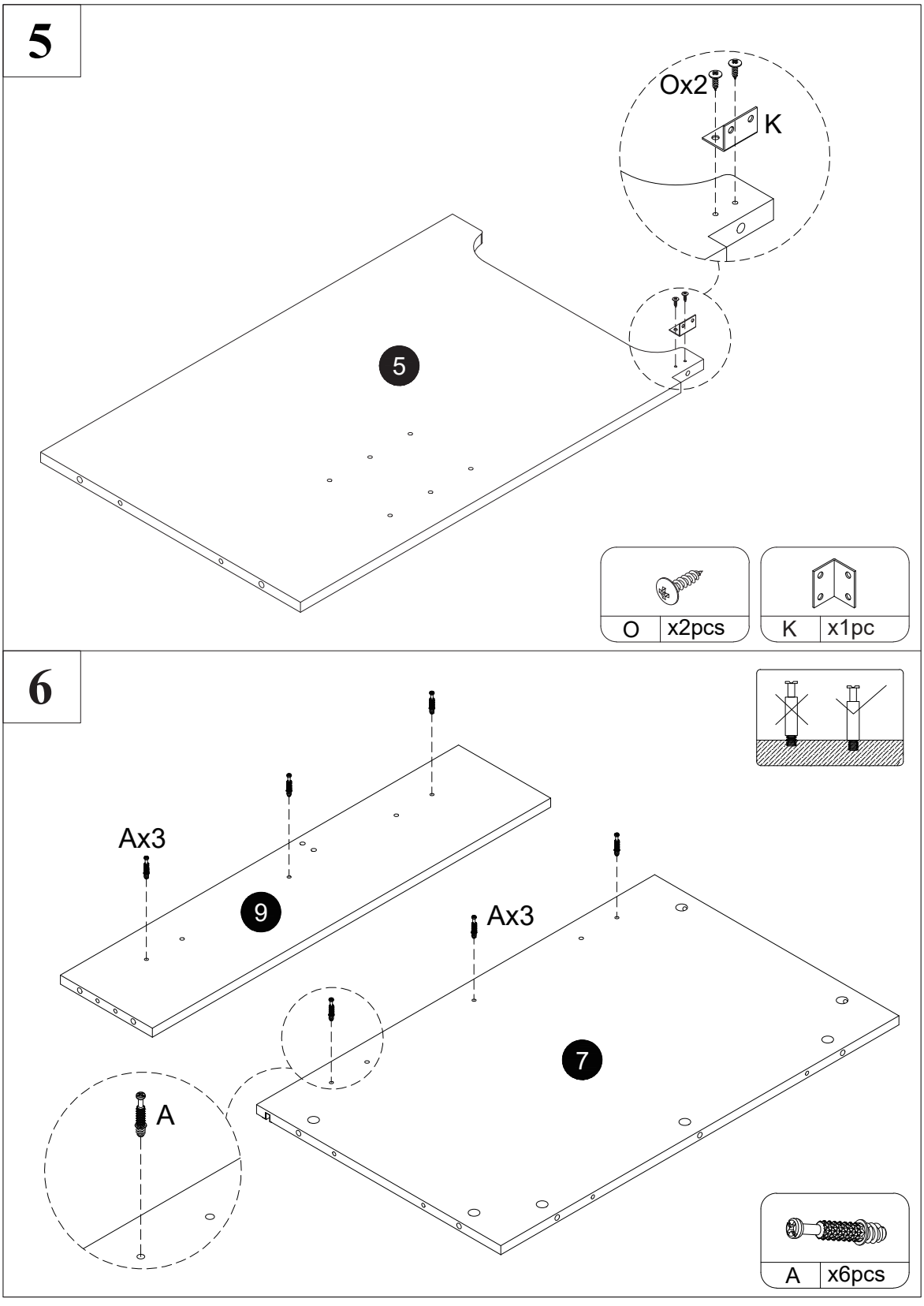

Drawings may not accurately depict product contours.

INSTALLATION INSTRUCTIONS

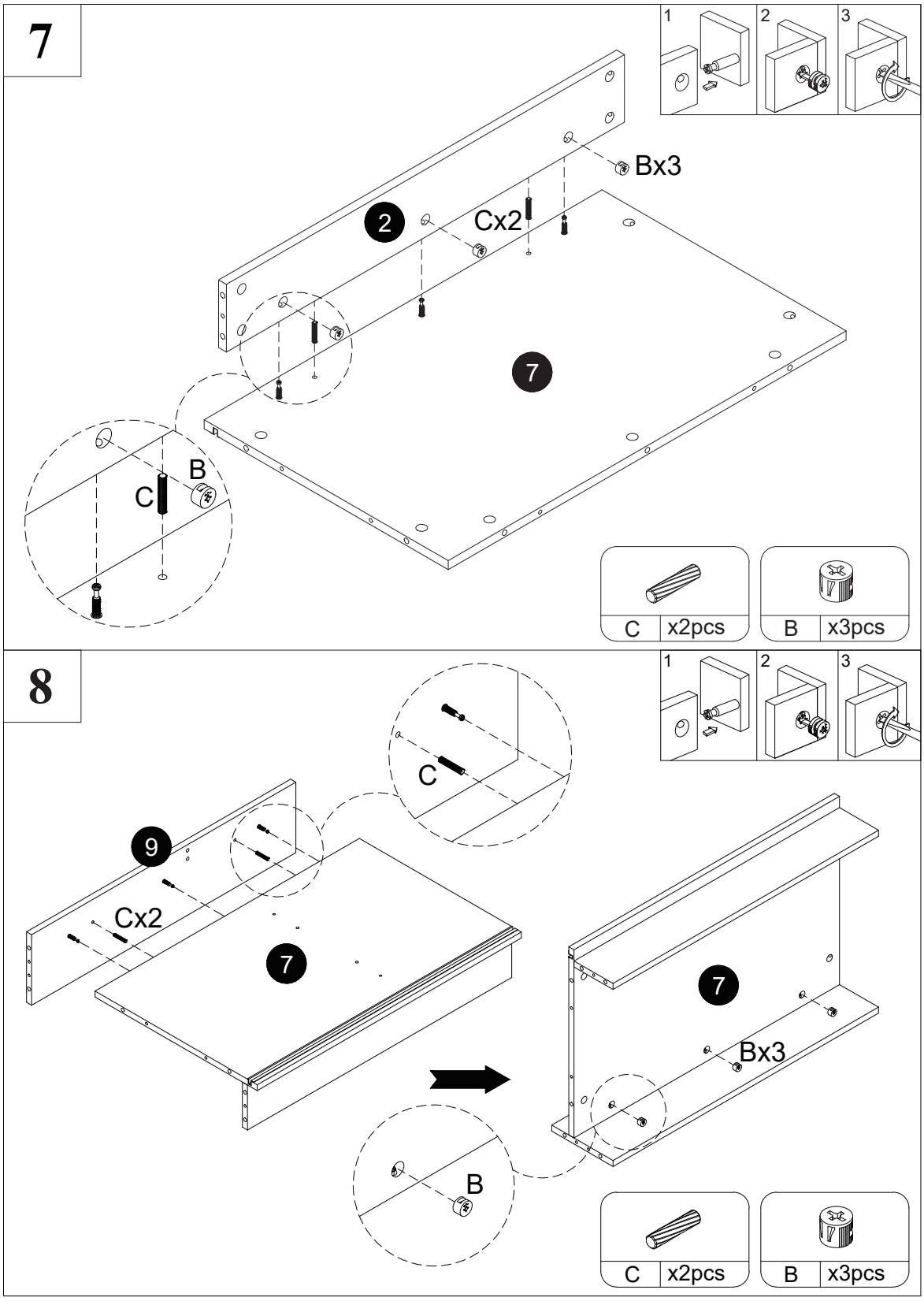

Drawings may not accurately depict product contours.

INSTALLATION INSTRUCTIONS

9

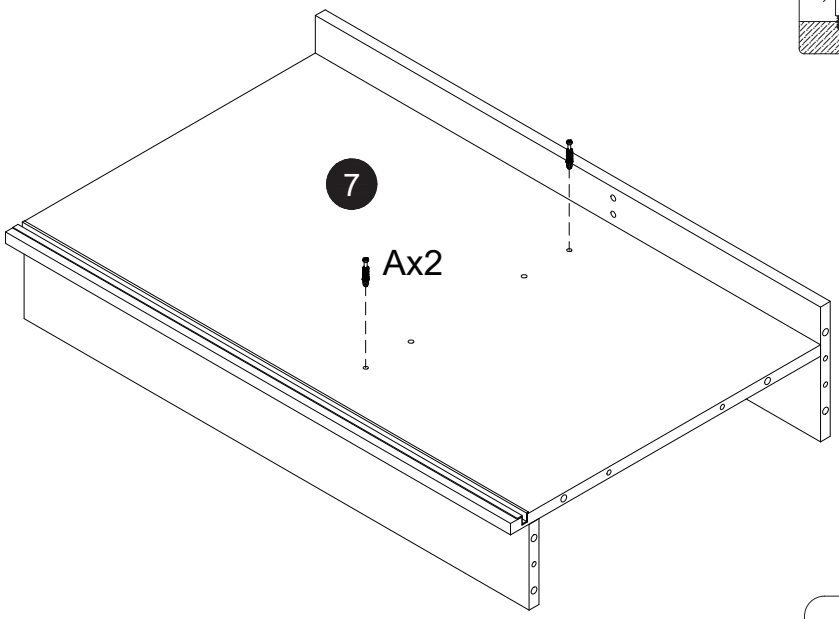

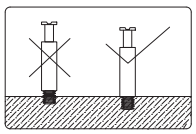

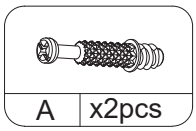

10

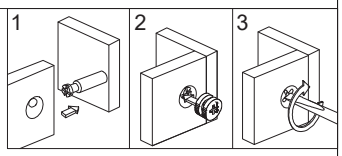

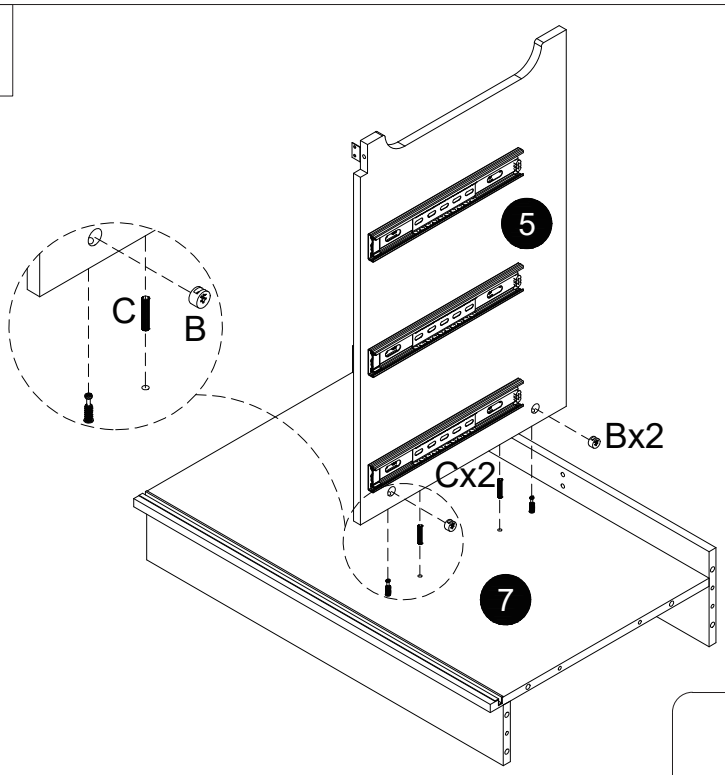

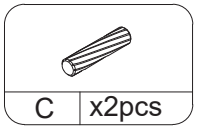

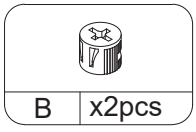

Drawings may not accurately depict product contours.

INSTALLATION INSTRUCTIONS

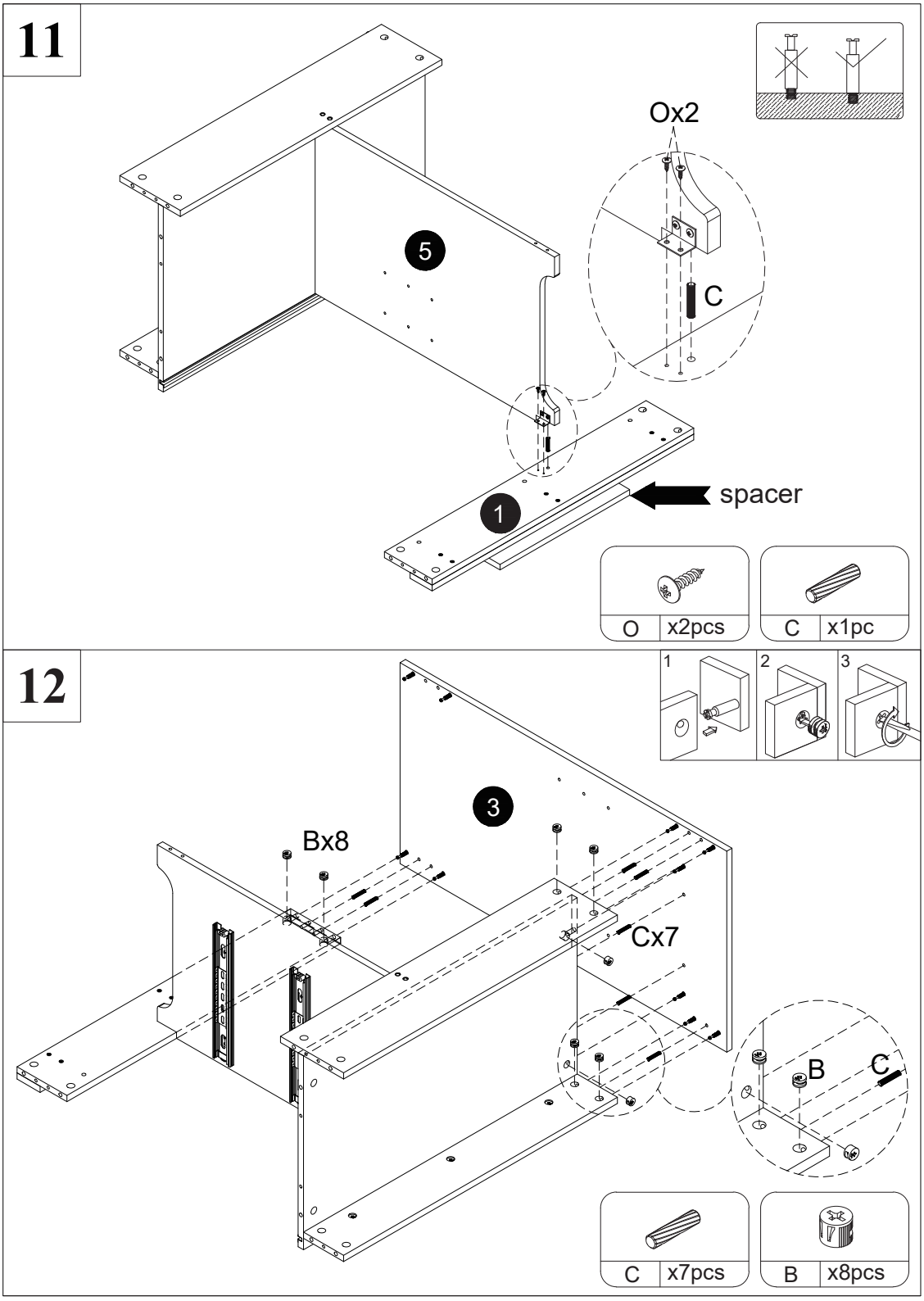

Drawings may not accurately depict product contours.

INSTALLATION INSTRUCTIONS

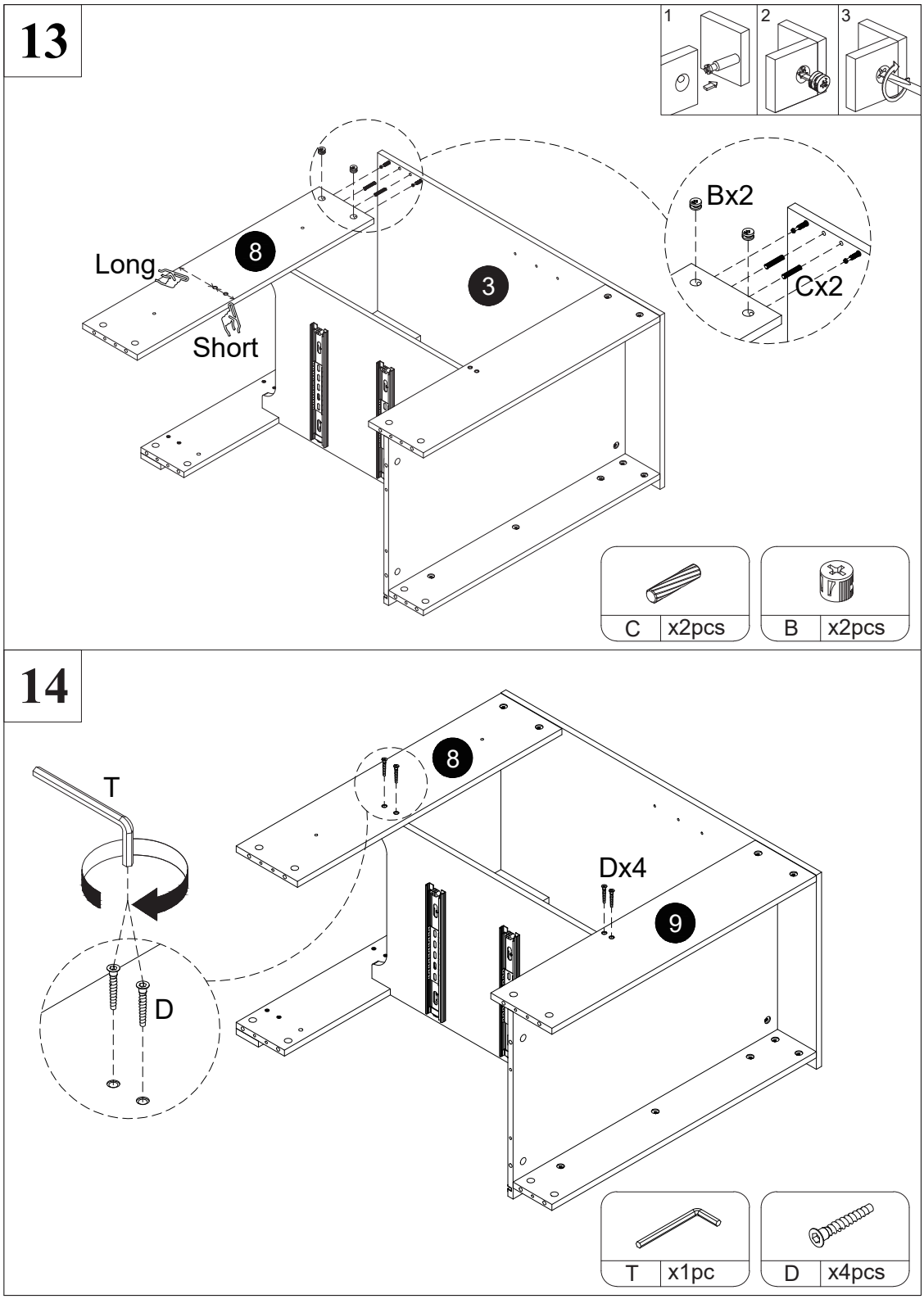

Drawings may not accurately depict product contours.

INSTALLATION INSTRUCTIONS

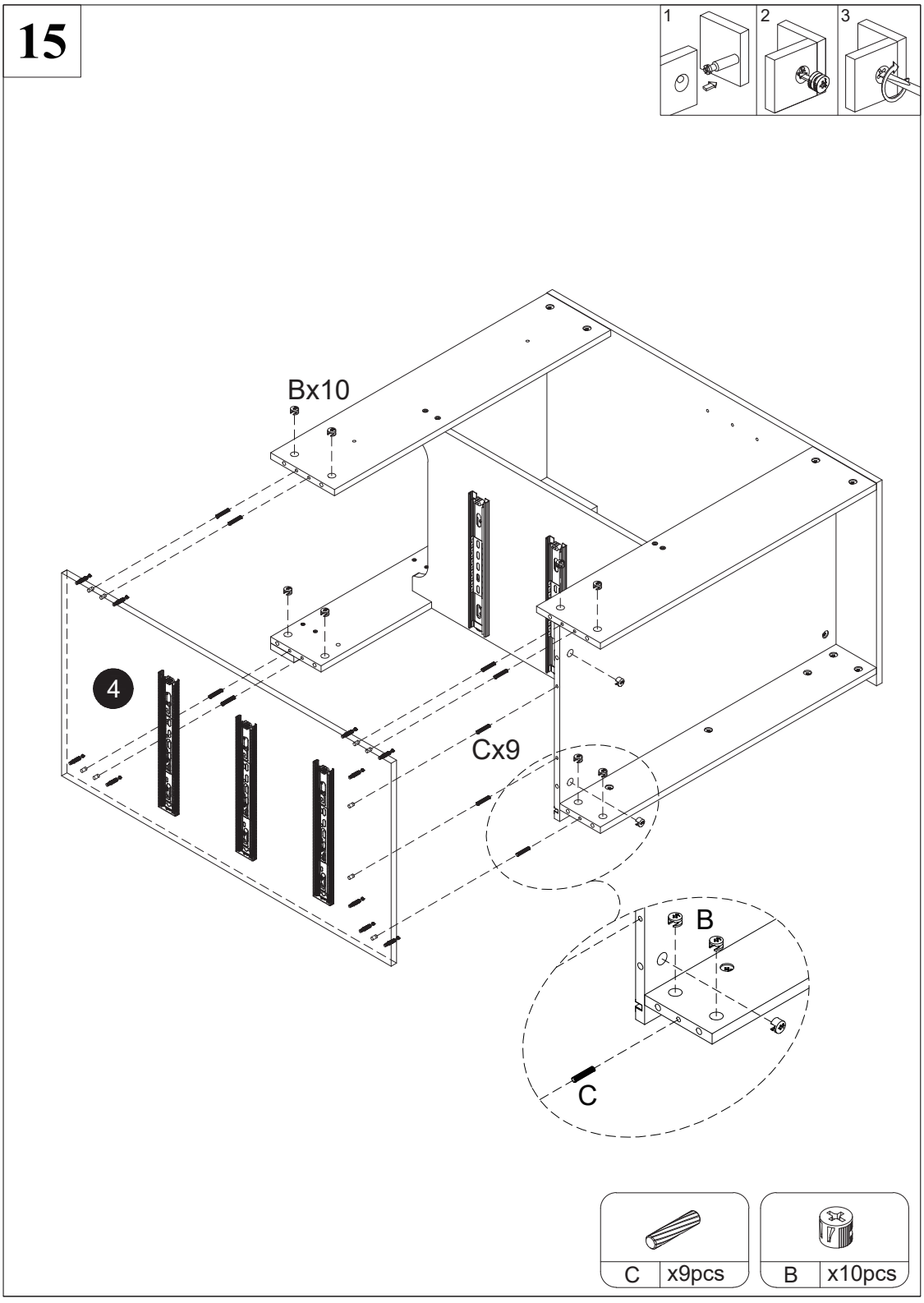

Drawings may not accurately depict product contours.

INSTALLATION INSTRUCTIONS

16

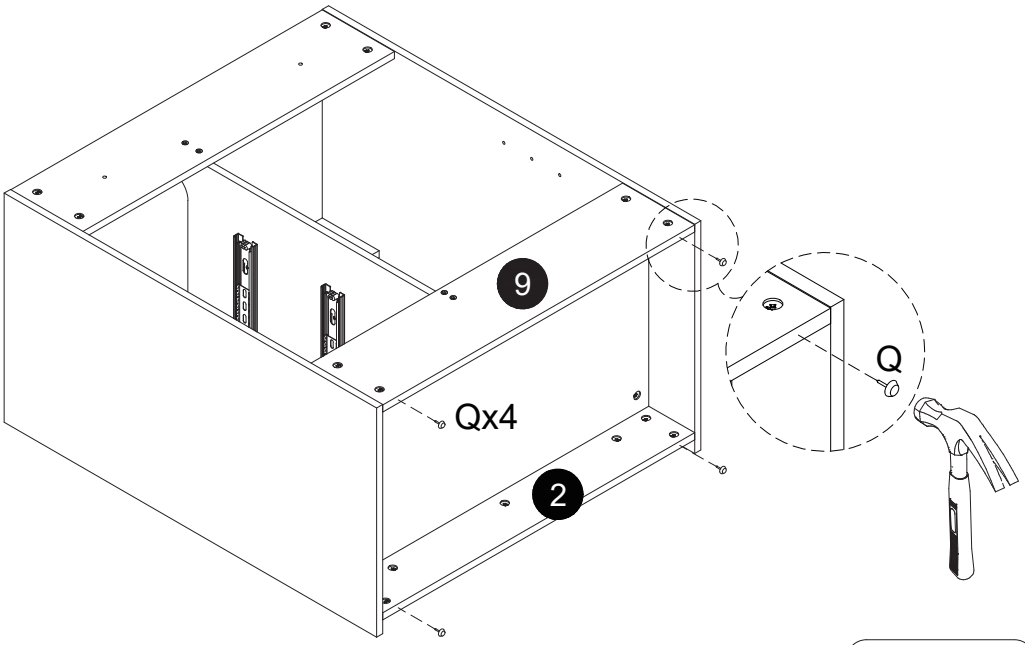

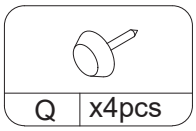

17

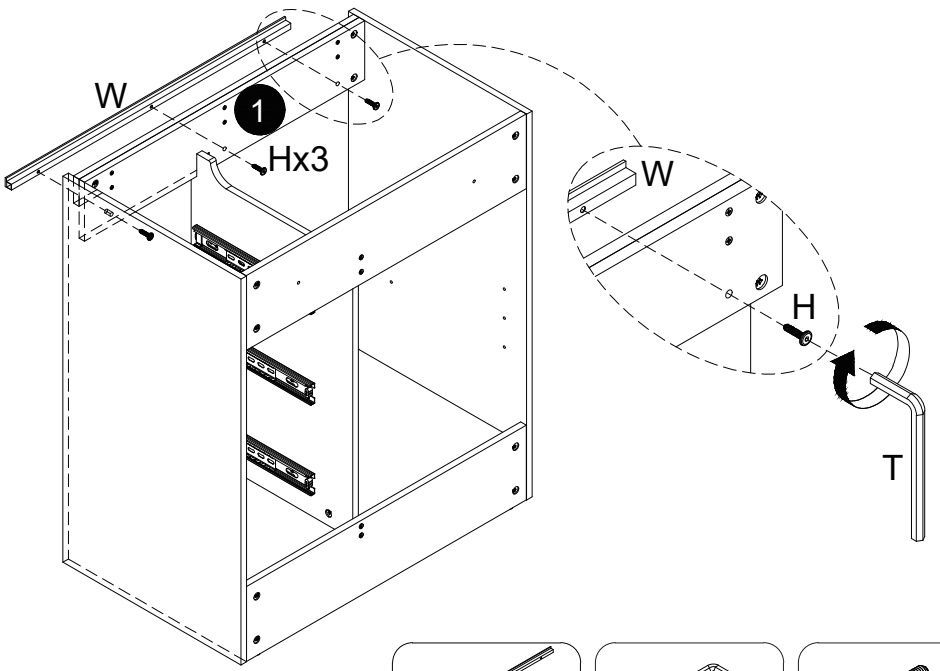

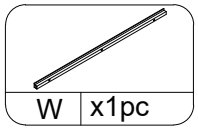

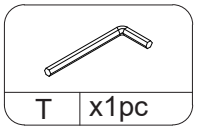

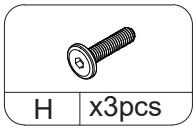

Drawings may not accurately depict product contours.

INSTALLATION INSTRUCTIONS

18

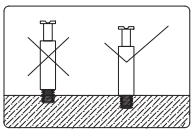

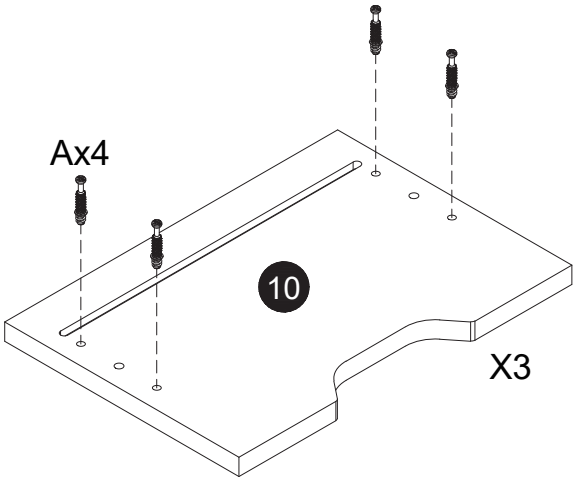

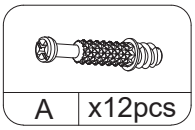

19

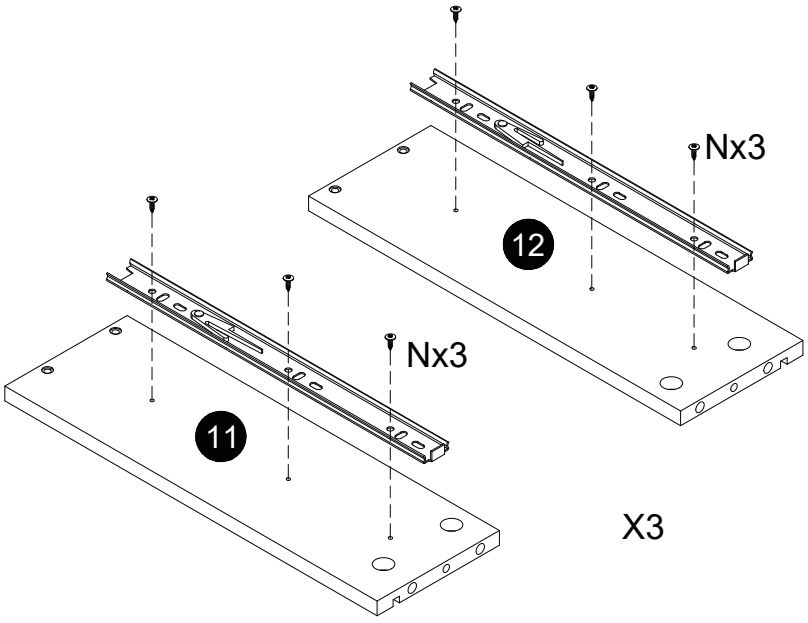

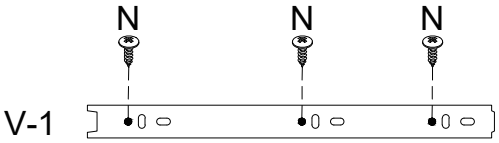

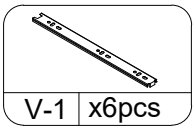

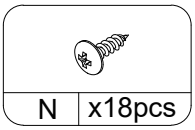

Drawings may not accurately depict product contours.

INSTALLATION INSTRUCTIONS

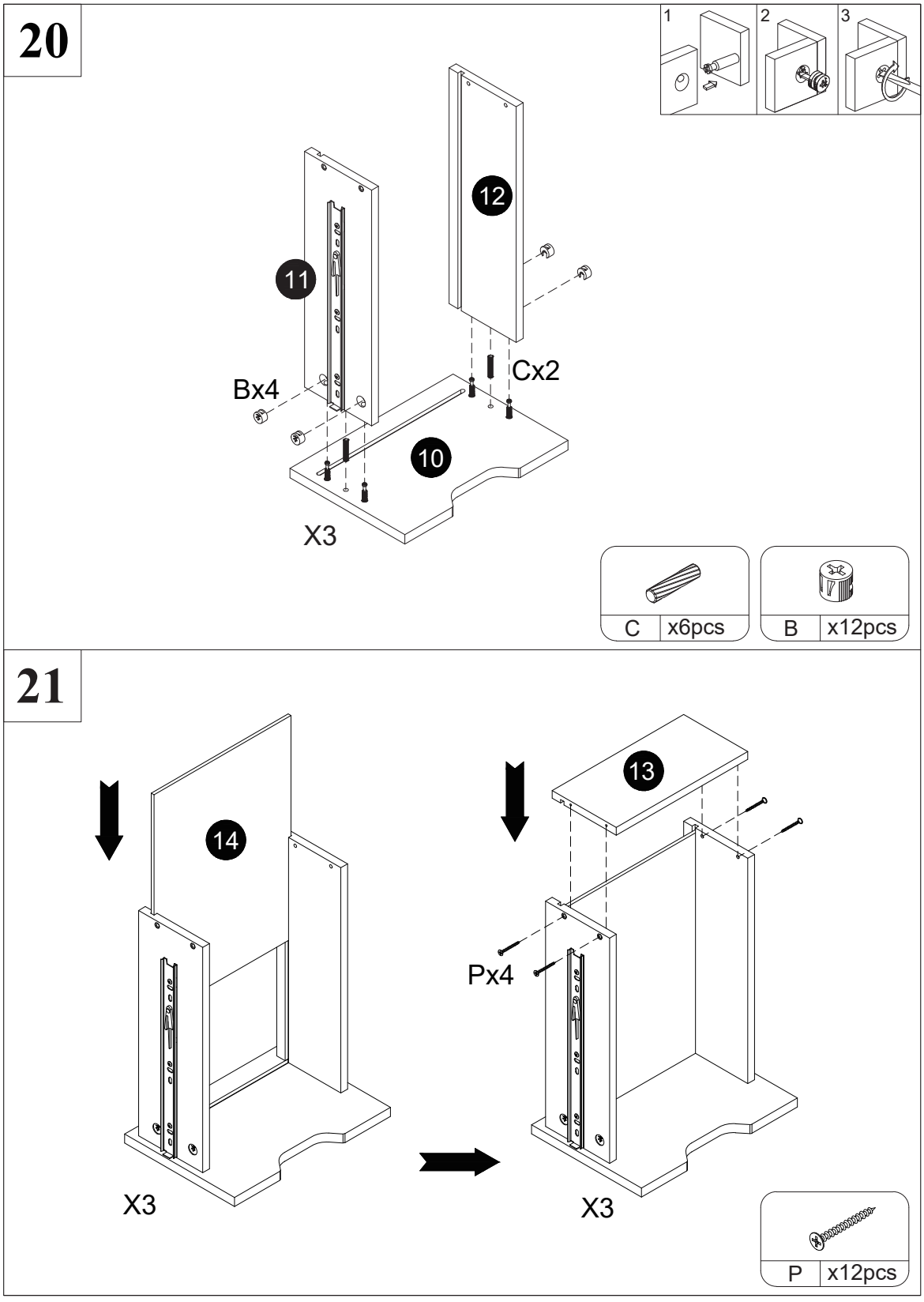

Drawings may not accurately depict product contours.

INSTALLATION INSTRUCTIONS

22

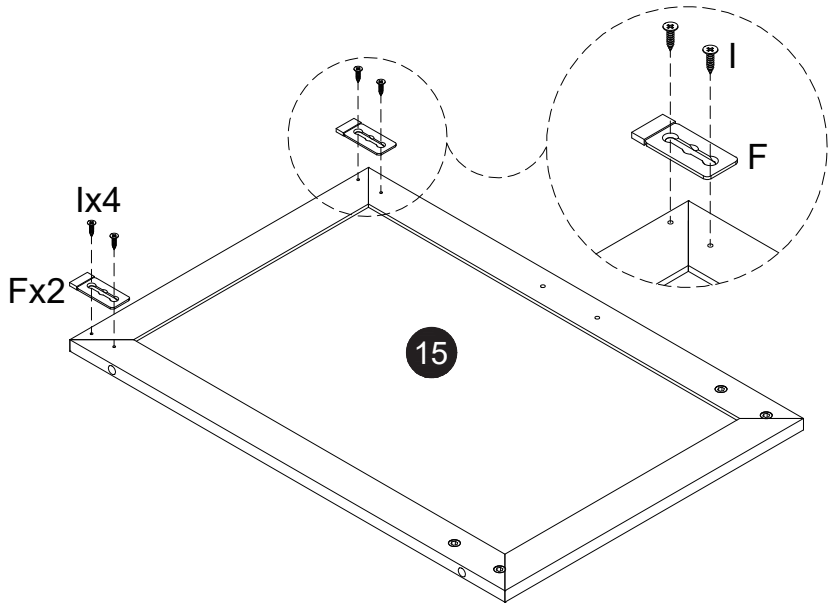

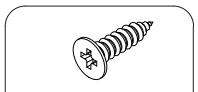

I x4pcs

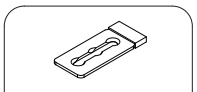

F x2pcs

23

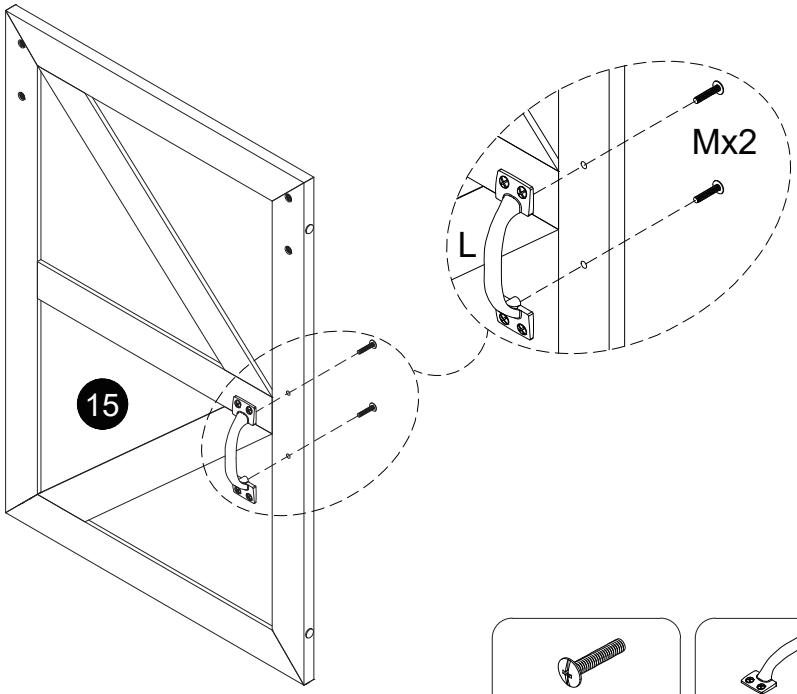

M x2pcs

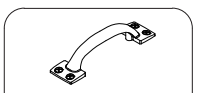

L x1pc

Drawings may not accurately depict product contours.

INSTALLATION INSTRUCTIONS

24

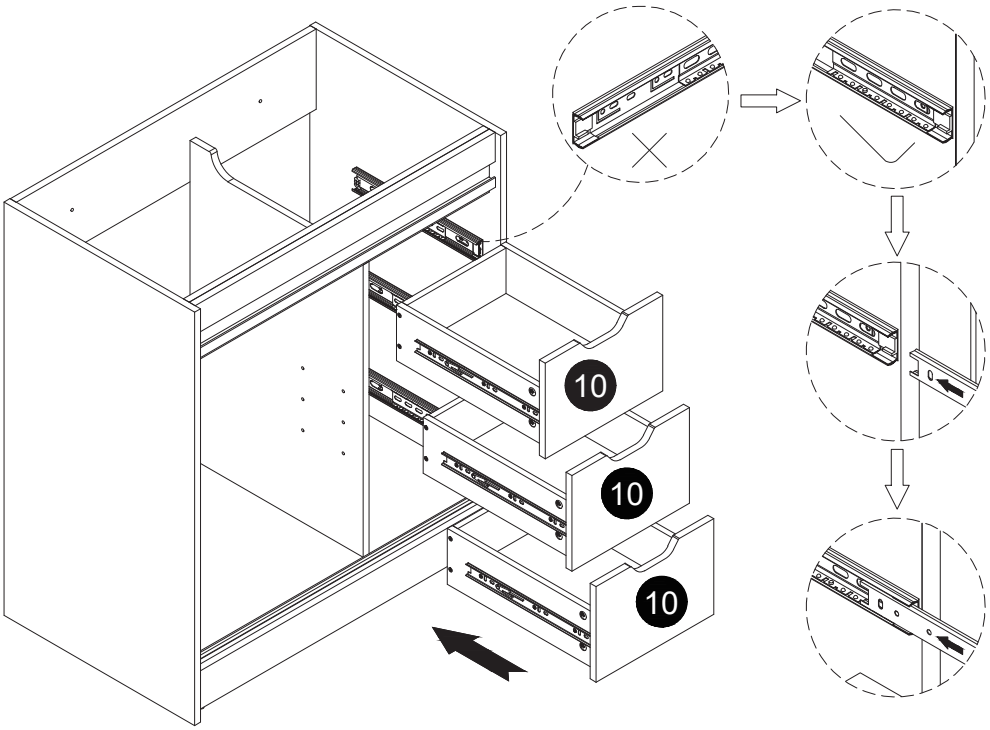

25

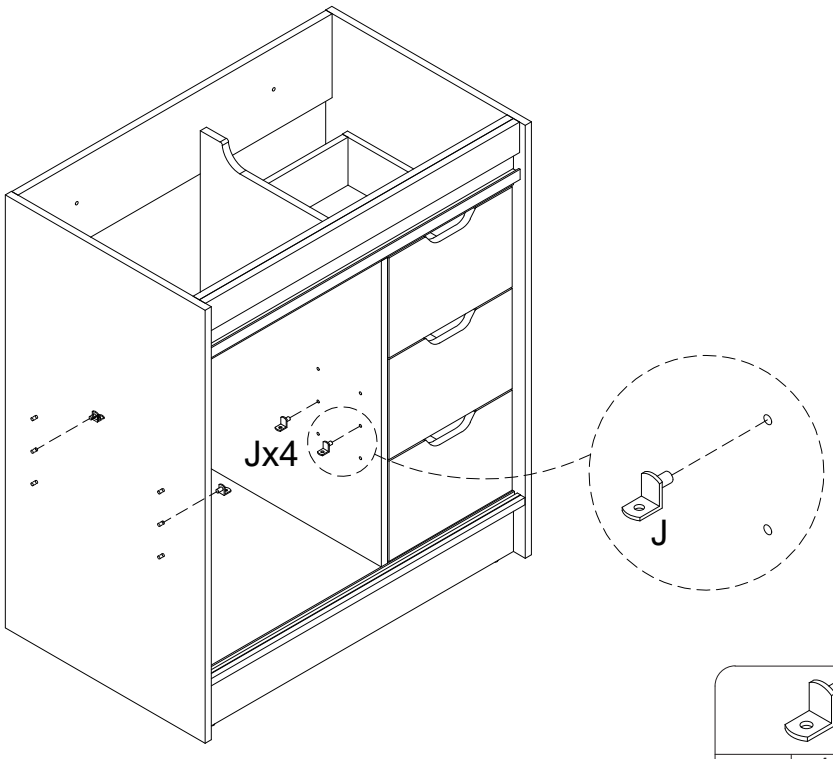

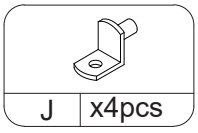

Drawings may not accurately depict product contours.

INSTALLATION INSTRUCTIONS

26

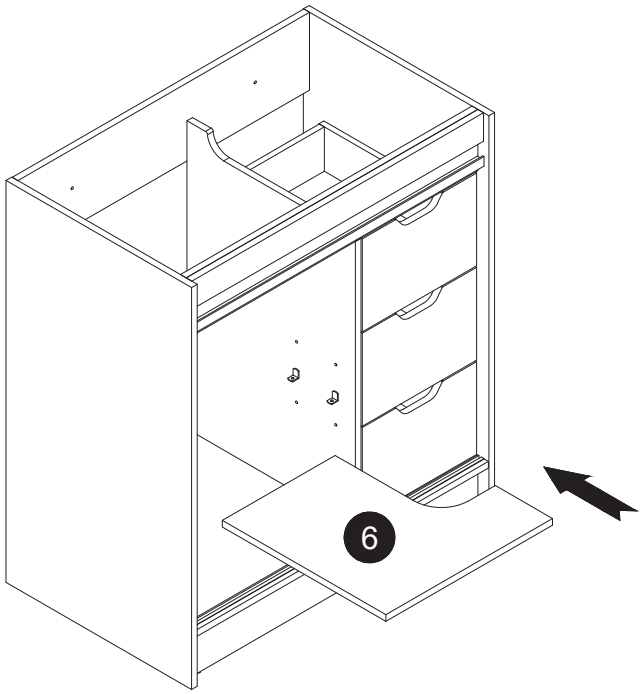

27

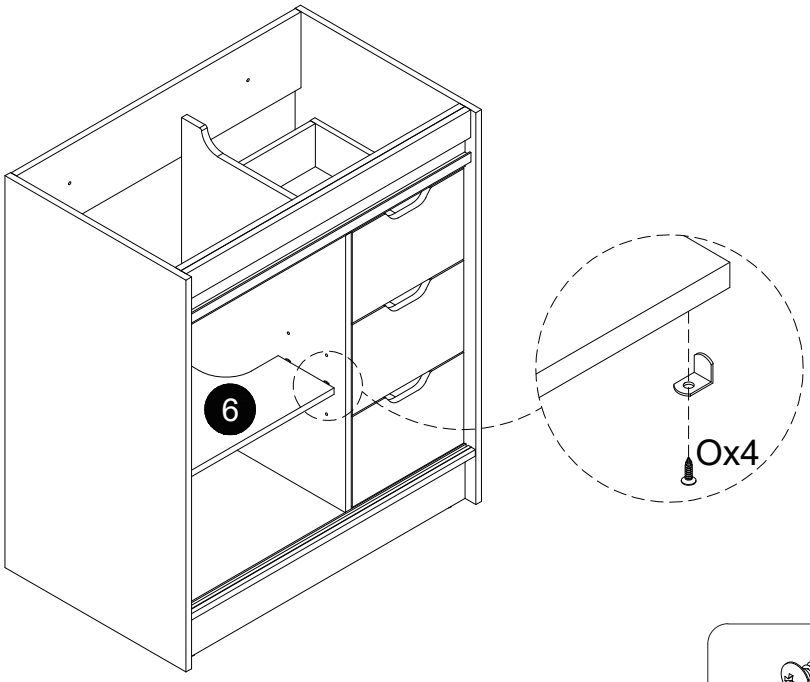

O	x4pcs

Drawings may not accurately depict product contours.

INSTALLATION INSTRUCTIONS

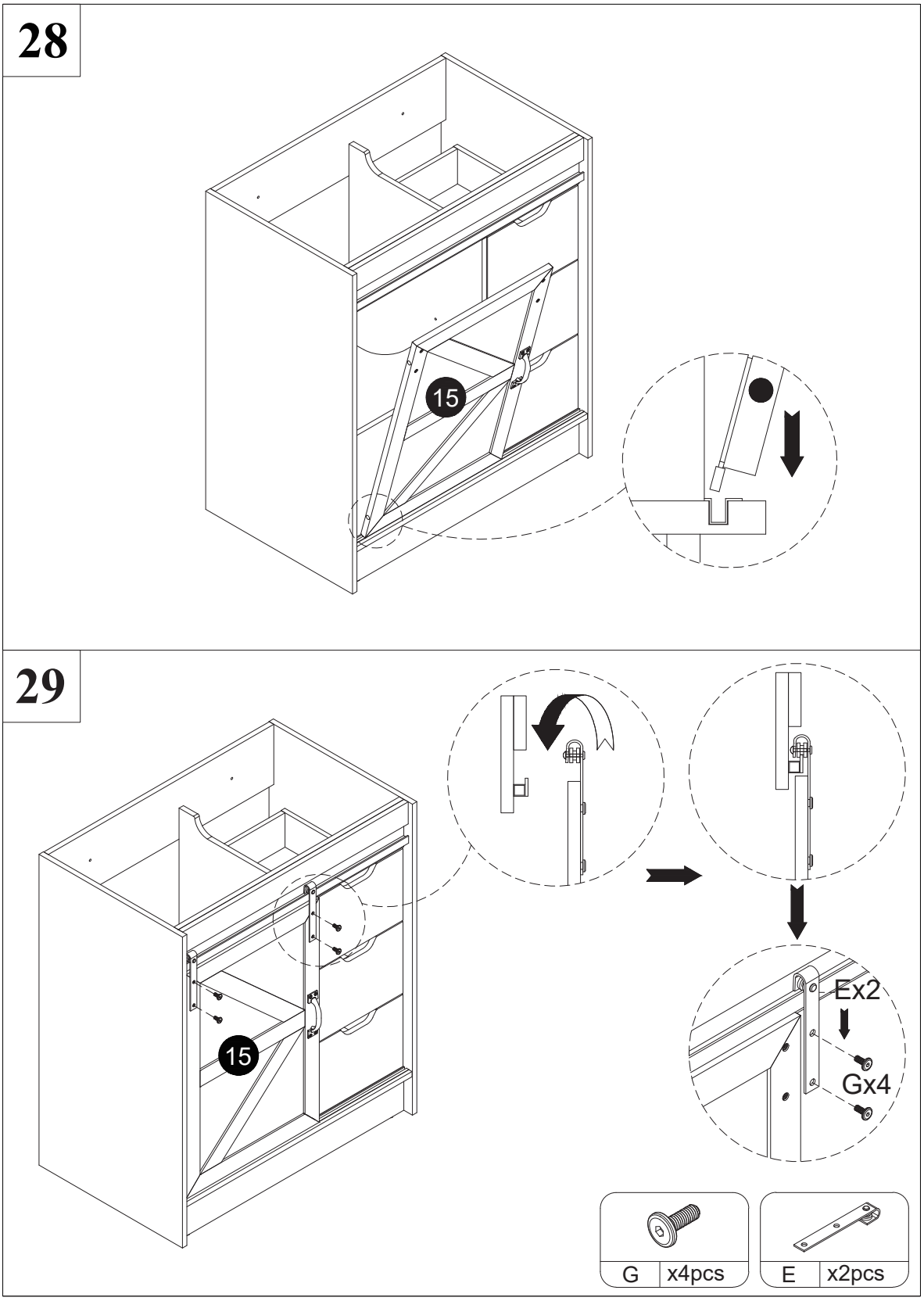

Drawings may not accurately depict product contours.

INSTALLATION INSTRUCTIONS

30

* Note: Before beginning installation, clean the area where the vanity will be permanently placed. Ensure the vanity will not interfere with any water supply or drain lines once mounted.
* With the assistance of another adult, carefully position the vanity against the wall in its final location. From inside the vanity, drill holes through the vanity mounting area and into the wall studs.

  Using the provided mounting hardware (R) suitable for your installation site, secure the vanity to the wall studs.
* WARNING: The vanity MUST be securely fastened to the wall.

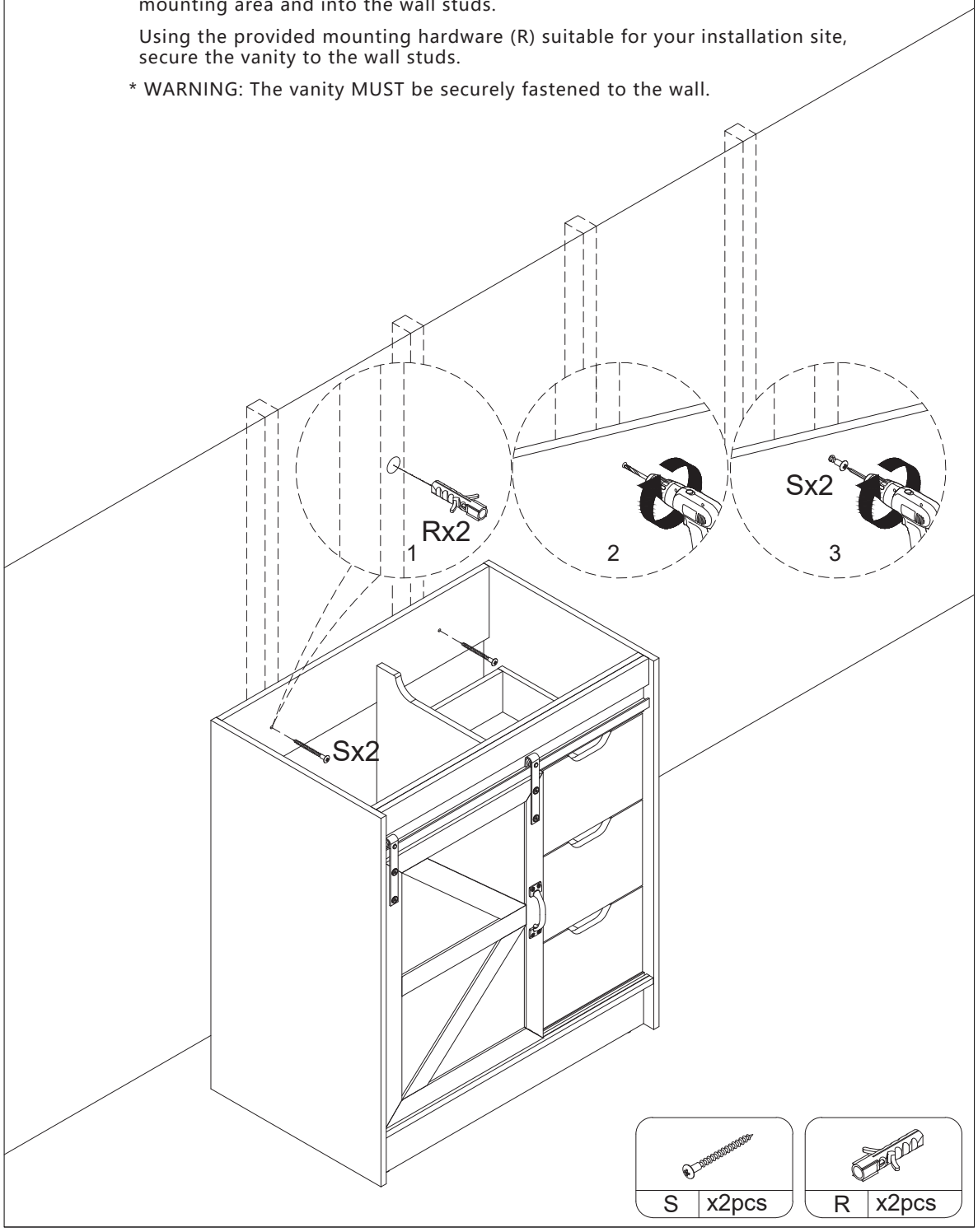

Drawings may not accurately depict product contours.

INSTALLATION INSTRUCTIONS

31

Note: At this stage, it may be easier to install the faucet and drain kit (not included) onto the vanity top (16) following the manufacturer's instructions.

Apply stain-free silicone or latex silicone caulk (not included) to the top edge of the vanity.

With the assistance of another adult, carefully lower the vanity top (16) onto the cabinet.

Wipe away any excess caulk with a soft cloth, and allow approximately 24 hours for the caulk to fully cure before use.

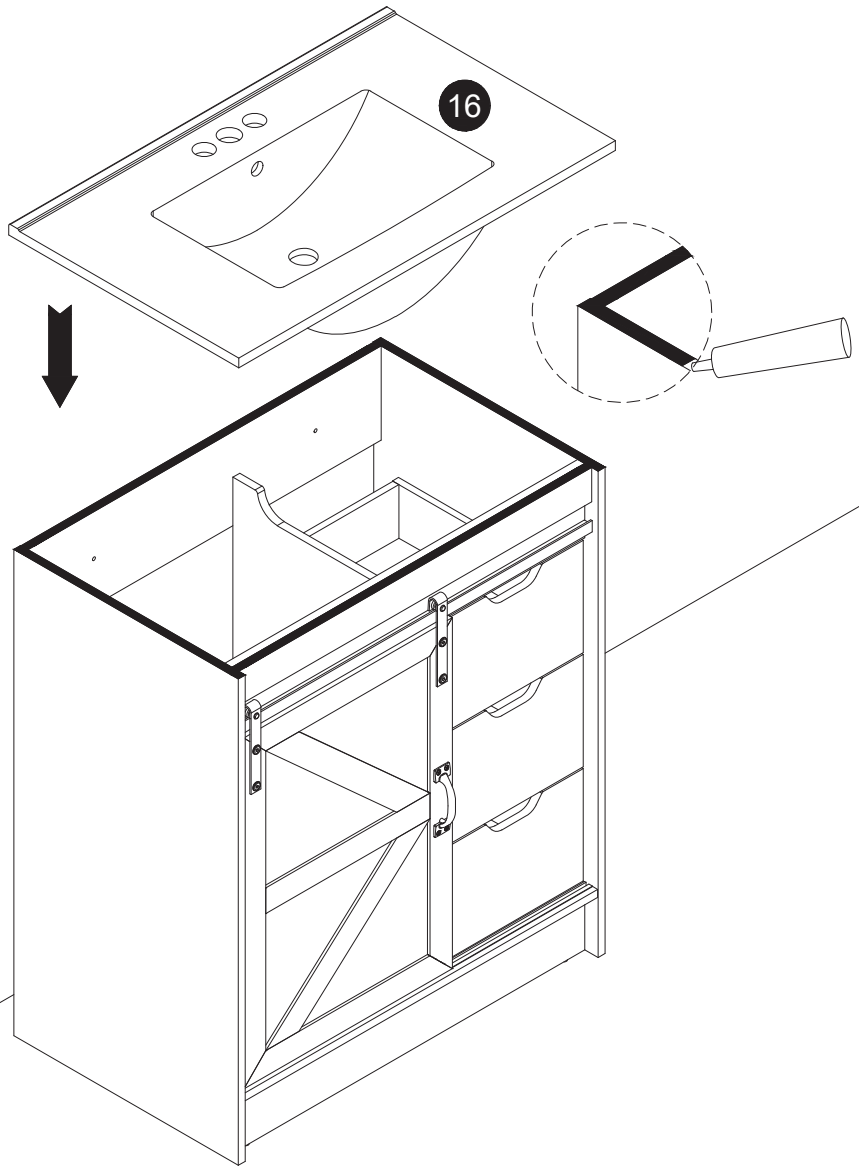

Drawings may not accurately depict product contours.

Vanity Care Guide

Vanity Care

- Avoid contact with sharp or abrasive objects to prevent surface damage.
- Protect the vanity from prolonged direct sunlight to minimize aging and discoloration.
- Do not place hot objects directly on the vanity surface.

Countertop Care

- Do not place hot items directly on the countertop surface.
- Wipe up spills immediately to prevent water rings or stains.
- Use protective mats or pads under objects that may scratch the surface.
- Dust regularly using a clean, soft cloth.
- Clean periodically with a cloth dampened with warm water. If necessary, use a mild dishwashing liquid or stone-safe soap, then dry thoroughly with a soft cloth.
- Do not use abrasive cleaners or products containing lemon, vinegar, or other acidic substances.

Cleaning & Maintenance

- Avoid cleaning products that contain bleach or ammonia.
- For wooden vanity bases, use wood-safe or wood-friendly cleaning products only.
- Use mild soap or natural cleaning solutions for routine exterior cleaning.