English Heritage Leg Tub Filler

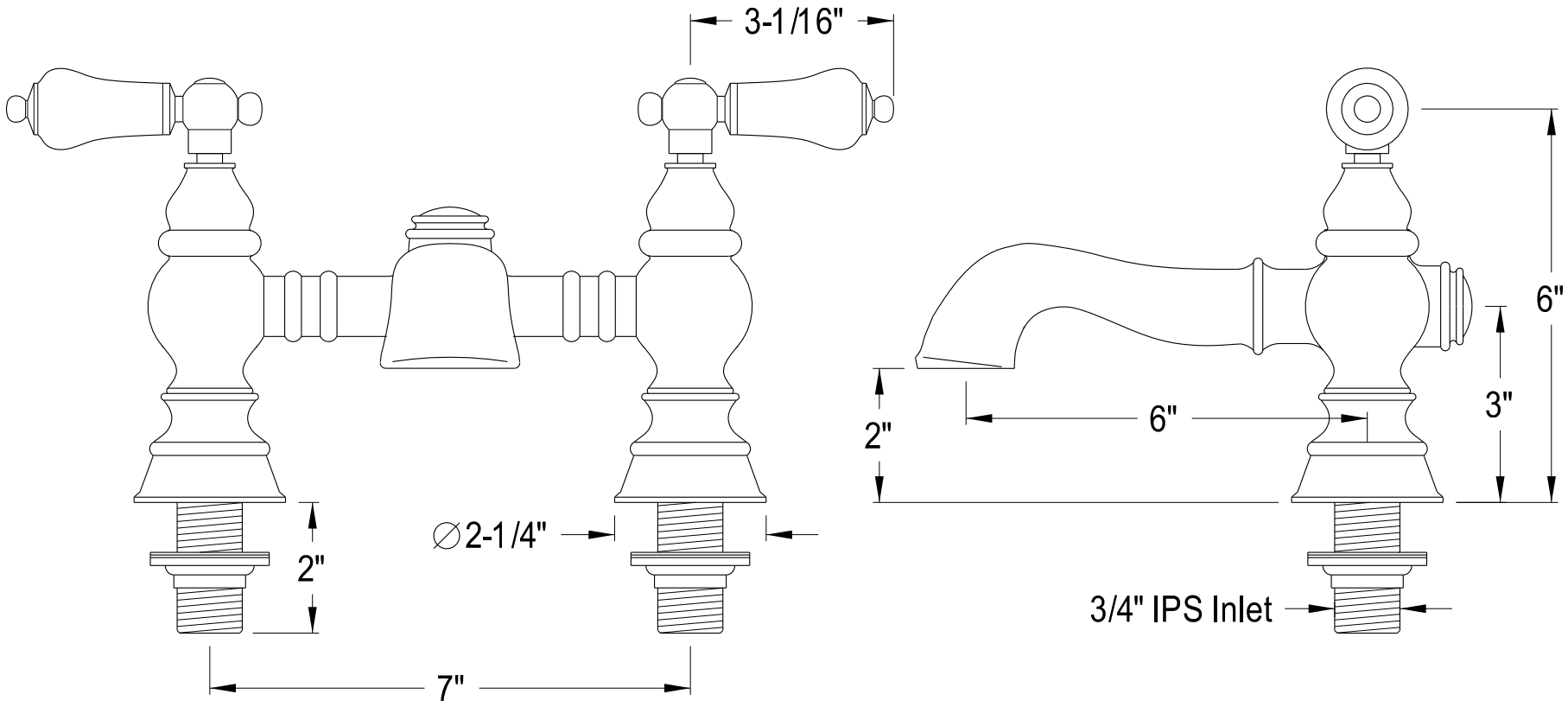

2010-12-A