BED FRAME

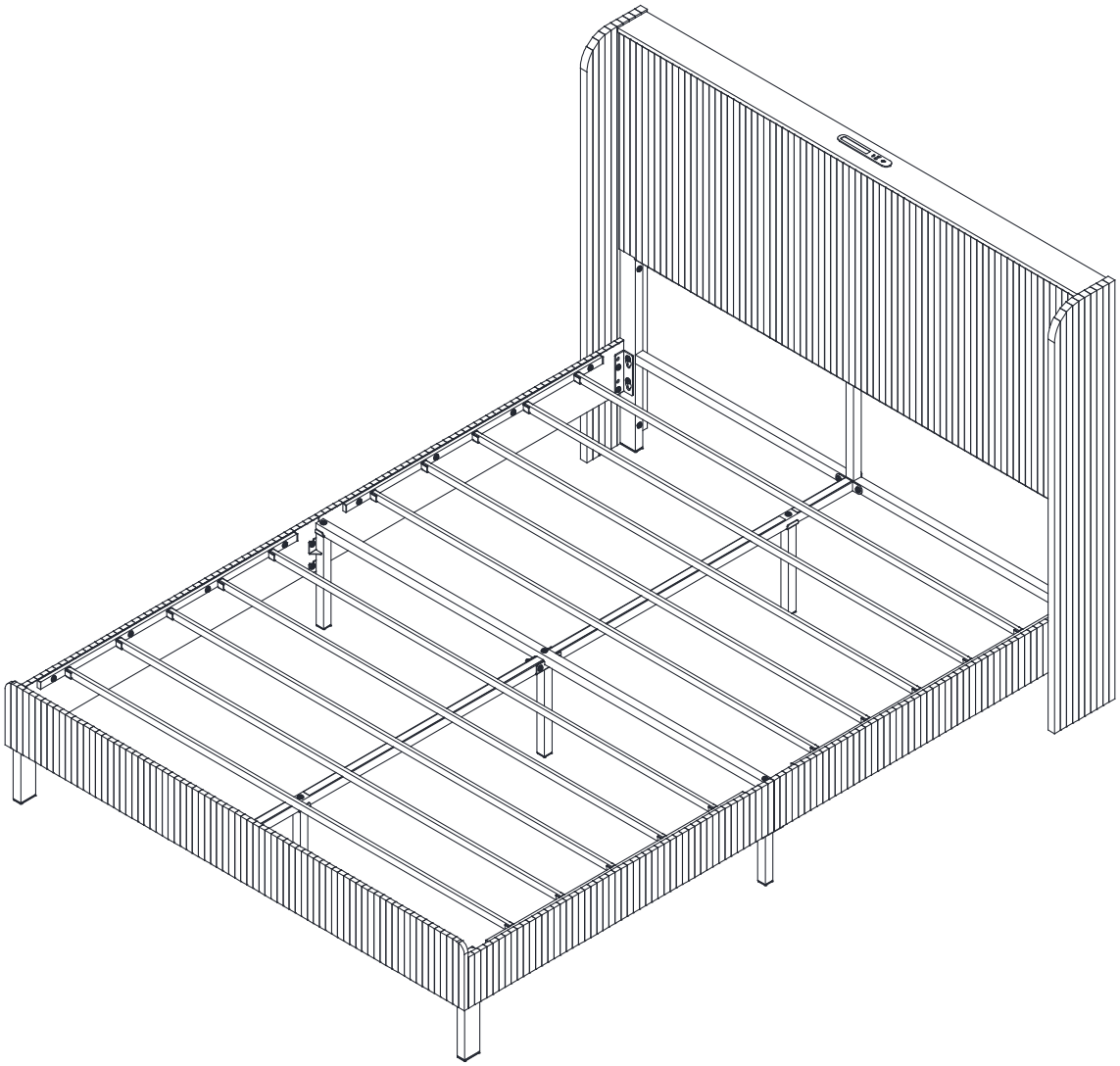

Thank you for choosing our products, please assemble and use it following the instructions.

Assembly Instruction

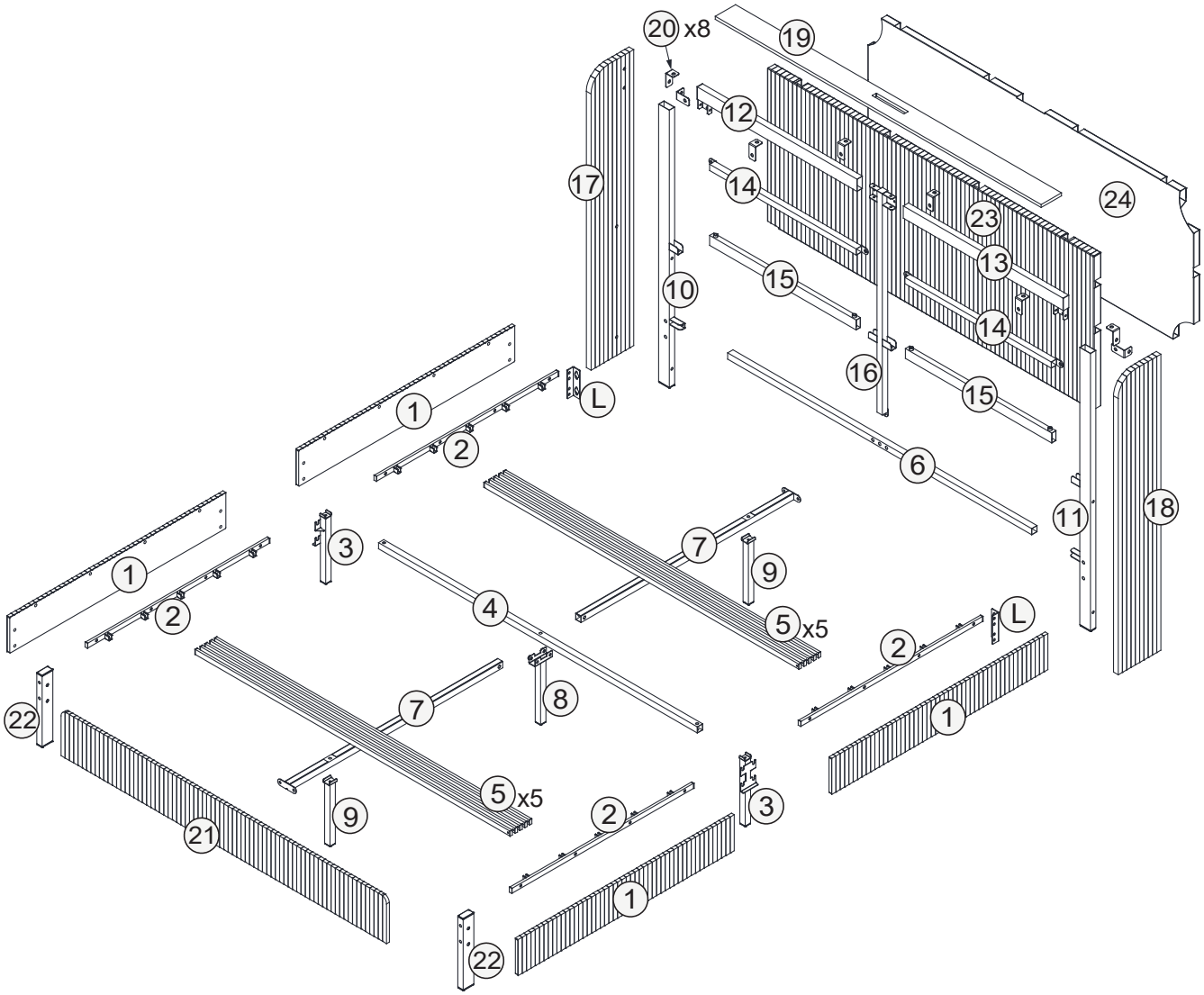

Important Note

HARDWARE NOTE :

1.Two or more people are required for assembly

2.Do not screw on the bolts too tight unless the installation is done. Make sure all bolts are tightly screwed before you use it.

Components

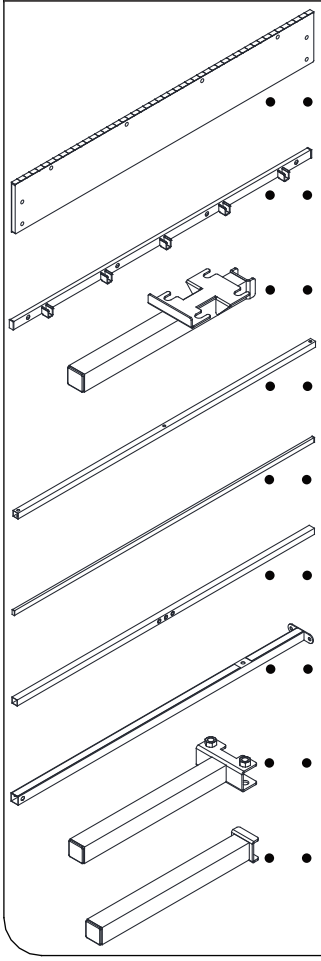

1 x4pcs

2 x4pcs

3 x2pcs

4 x1pc

5 x10pcs

6 x1pc

7 x2pcs

8 x1pc

9 x2pcs

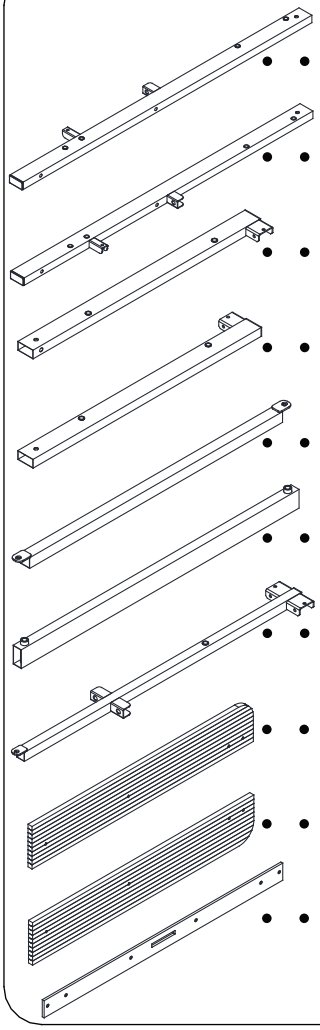

10 x1pc

11 x1pc

12 x1pc

13 x1pc

14 x2pcs

15 x2pcs

16 x1pc

17 x1pc

18 x1pc

19 x1pc

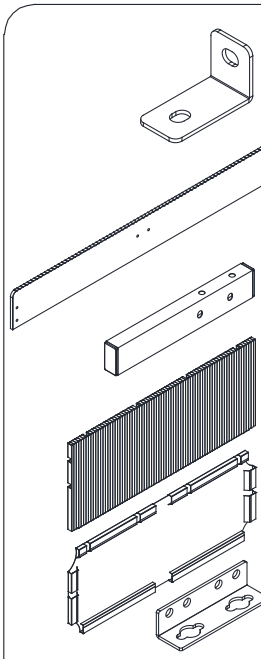

20 x8pcs

21 x1pc

22 x2pcs

23 x1pc

24 x1pc

L x2pcs

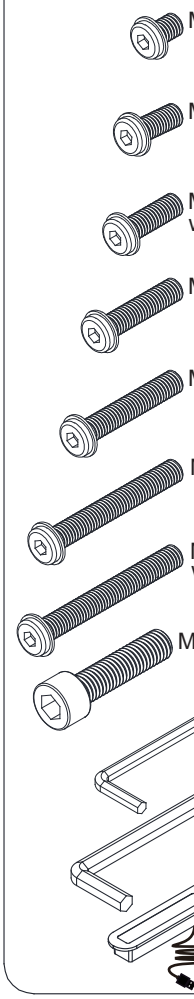

M8x12 A x40pcs

M8x20 B x19pcs

M8x25 white zinc C x1pc

M8x35 D x12pcs

M8x45 E x2pcs

M8x60 F x5pcs

M8x65 white zinc G x4pcs

M10x40 H x4pcs

M8 I x1pc

M10 J x1pc

U x1pc

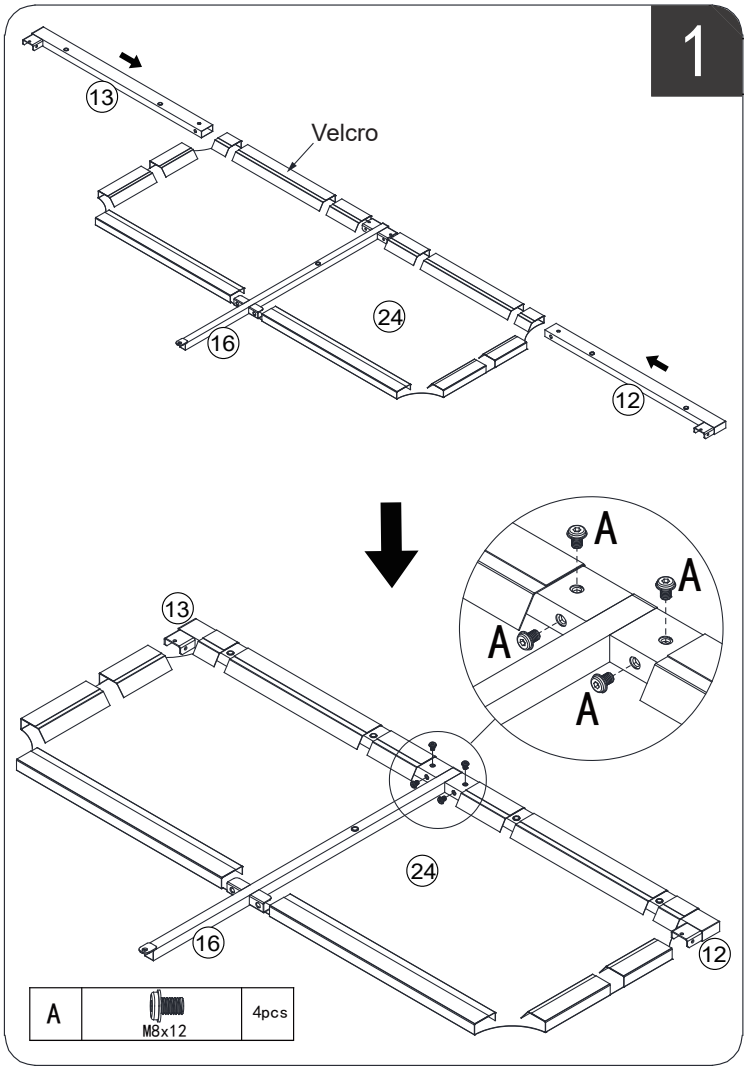
1
13
Velcro
24
16
12
A
A
A
A
13
24
16
12
A
M8x12
4pcs

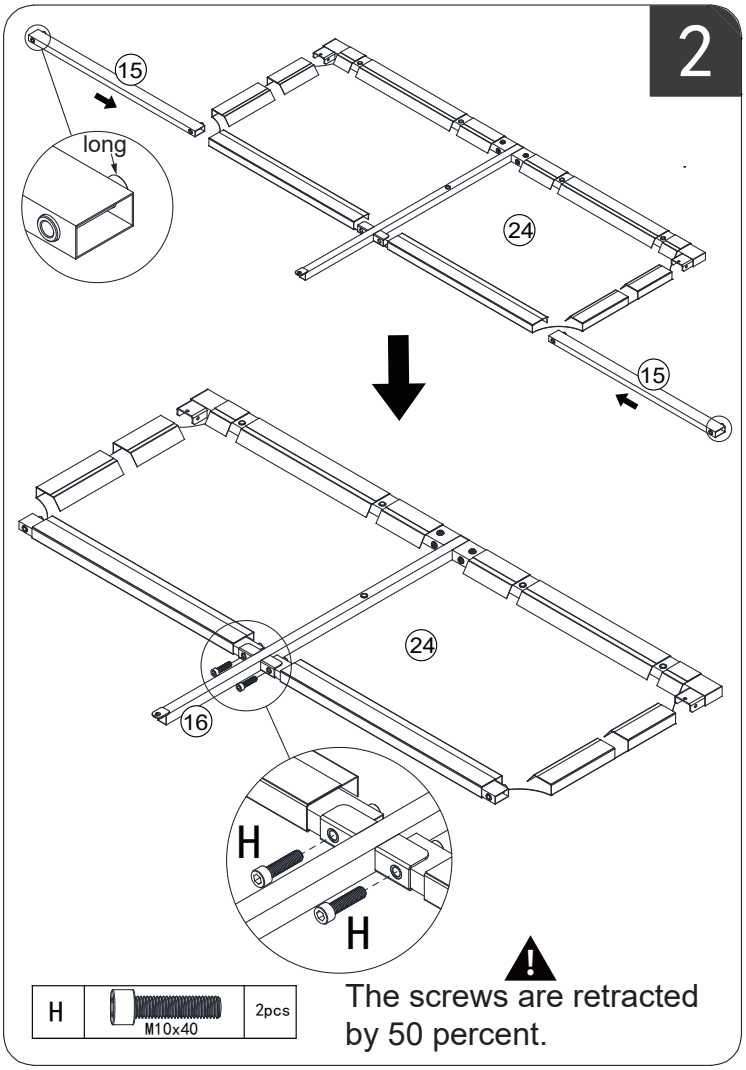
2
15
long
24
15
24
16
H
H
H
M10x40
2pcs
The screws are retracted by 50 percent.

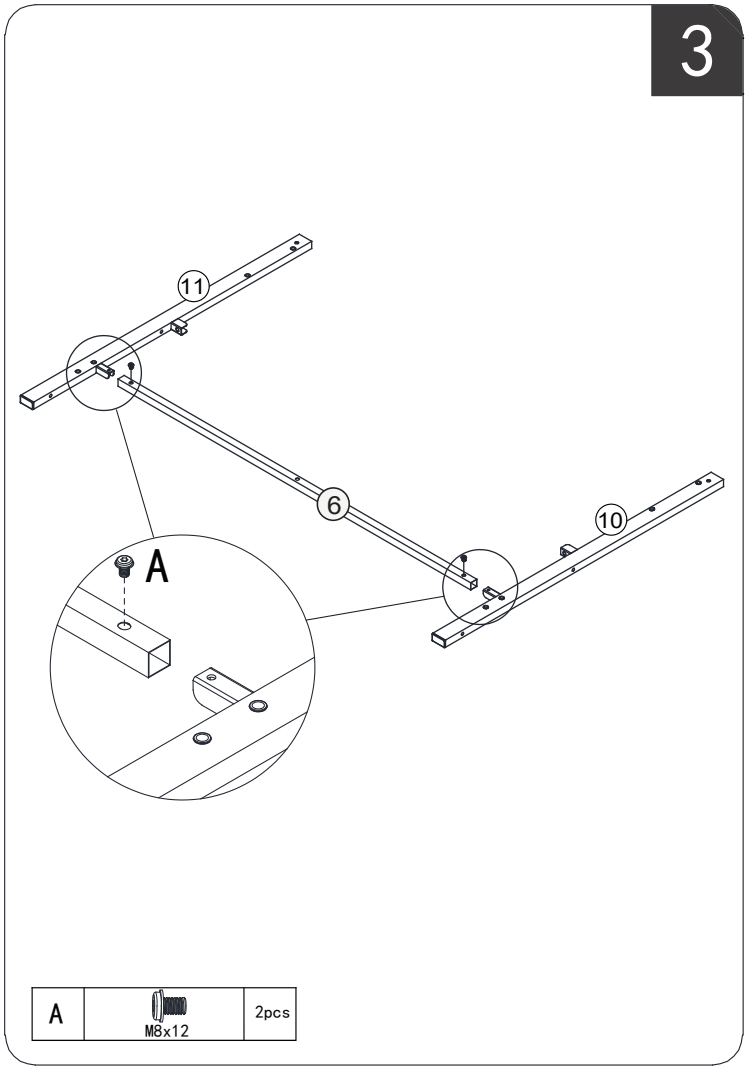
3
11
6
10
A
A
M8x12
2pcs

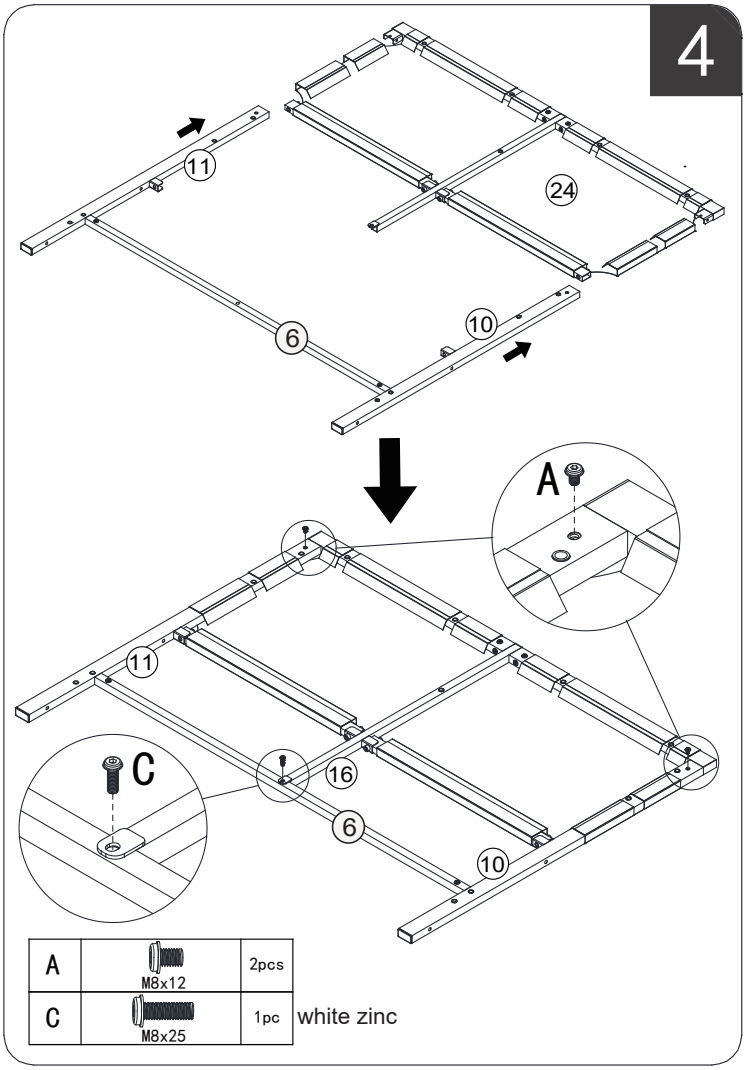
4
11
24
6
10
A
11
C
16
6
10
A
M8x12
2pcs
C
M8x25
1pc
white zinc

5

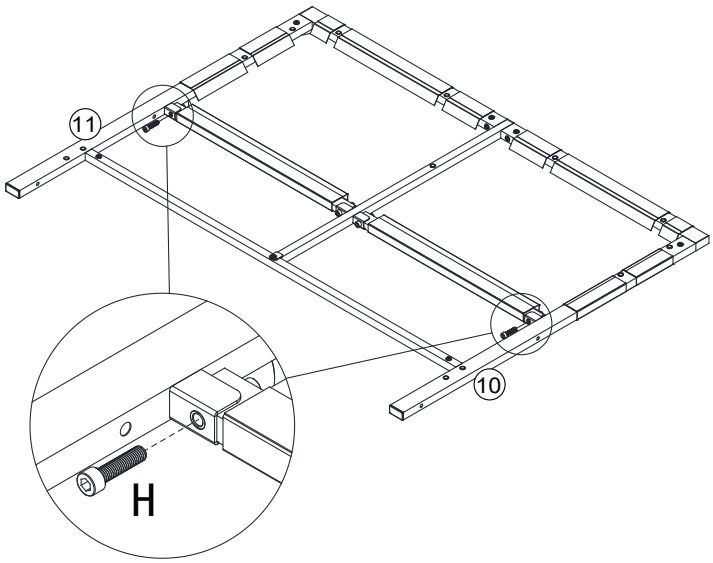

Fully tighten all the screws.

H	M10x40	2pcs

6

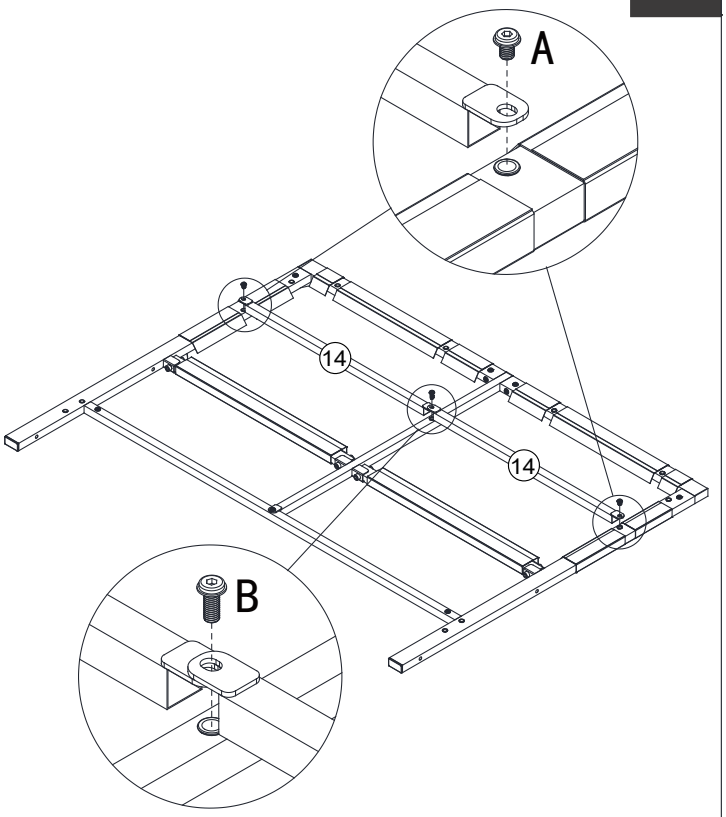

A	M8x12	2pcs
B	M8x20	1pc

7

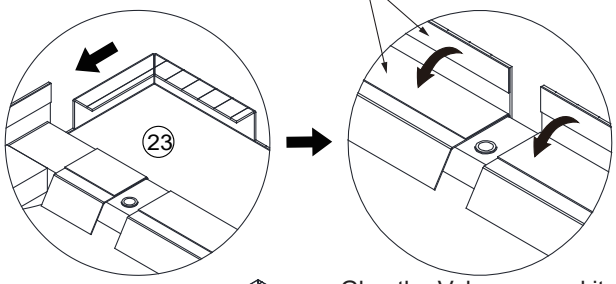

Glue the Velcro around it.

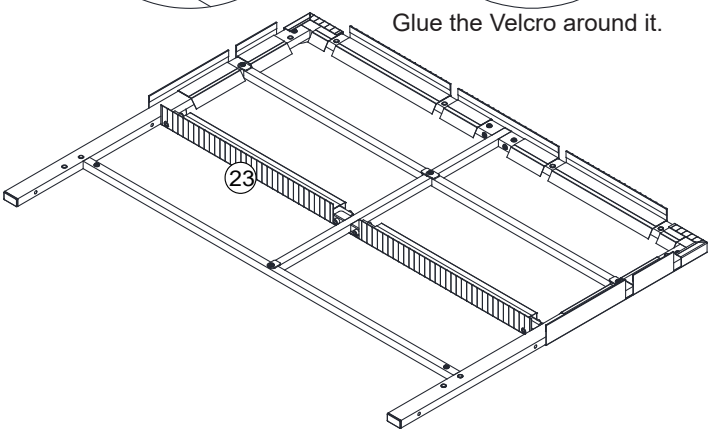

8

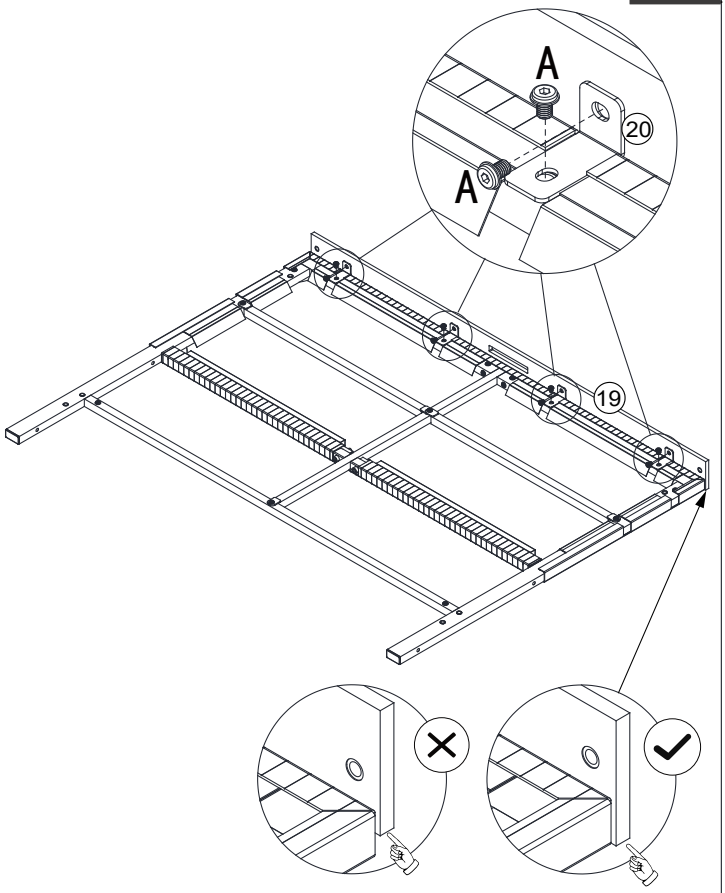

A	M8x12	8pcs

9

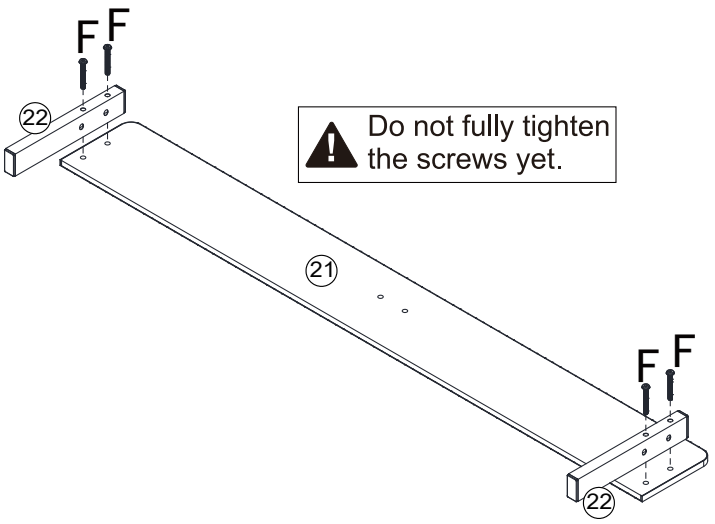

Do not fully tighten the screws yet.

F	M8x60	4pcs

10

x4

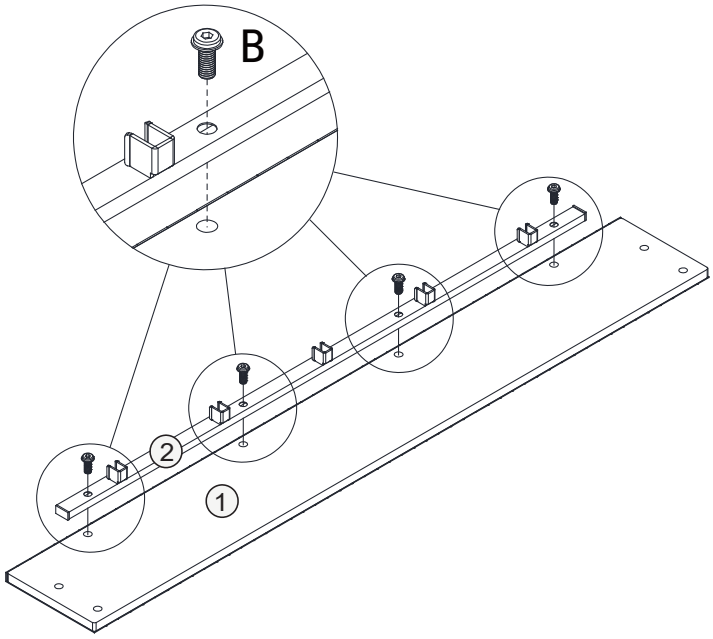

B	M8x20	16pcs

11

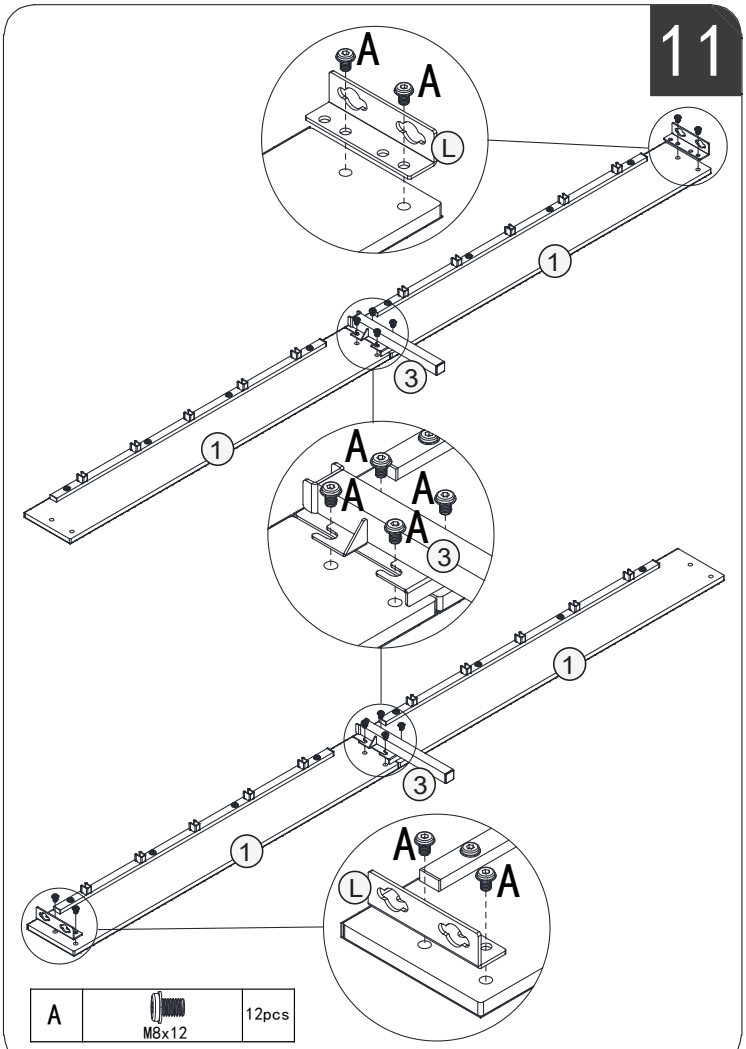

A	M8x12	12pcs

12

Fully tighten all the screws.

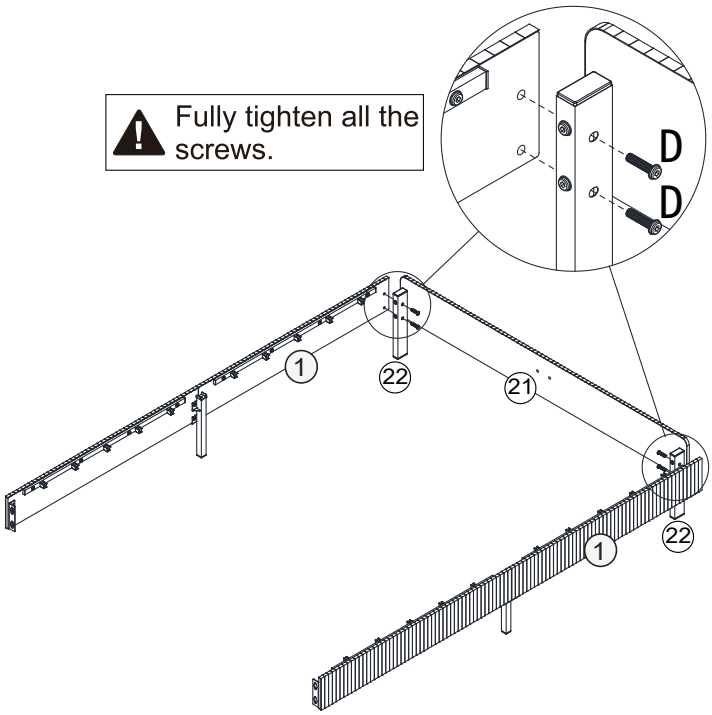

D	M8x35	4pcs

13

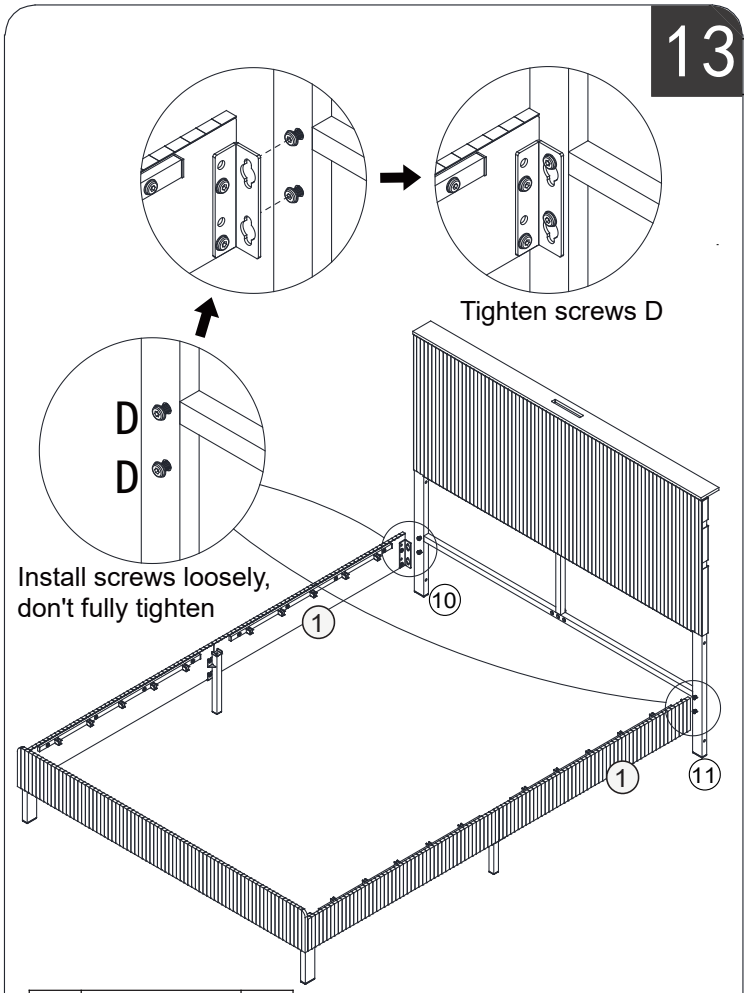

D	M8x35	4pcs

14

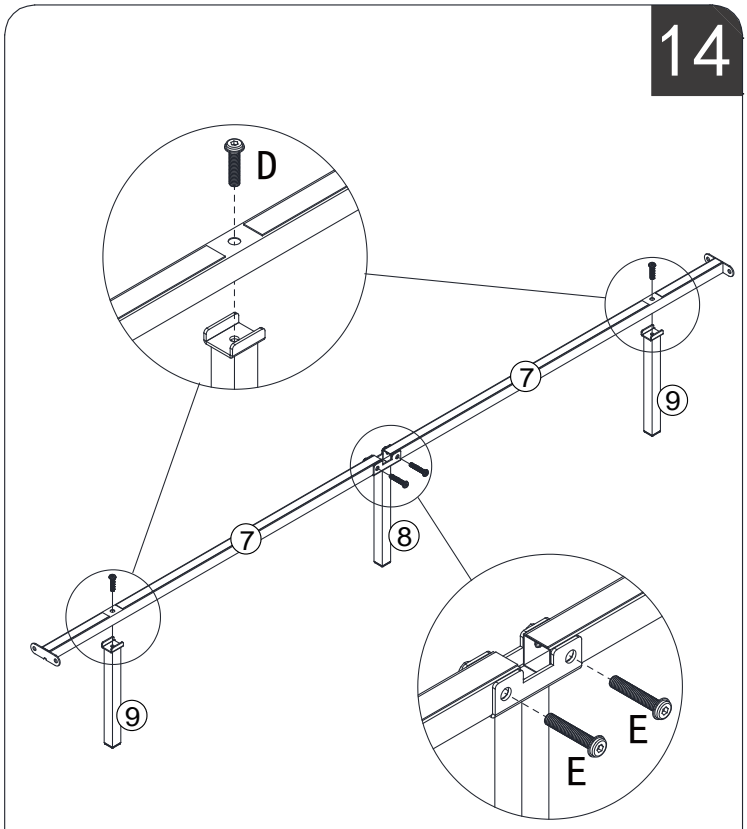

Do not fully tighten the screws yet.

D	M8x35	2pcs
E	M8x45	2pcs

15

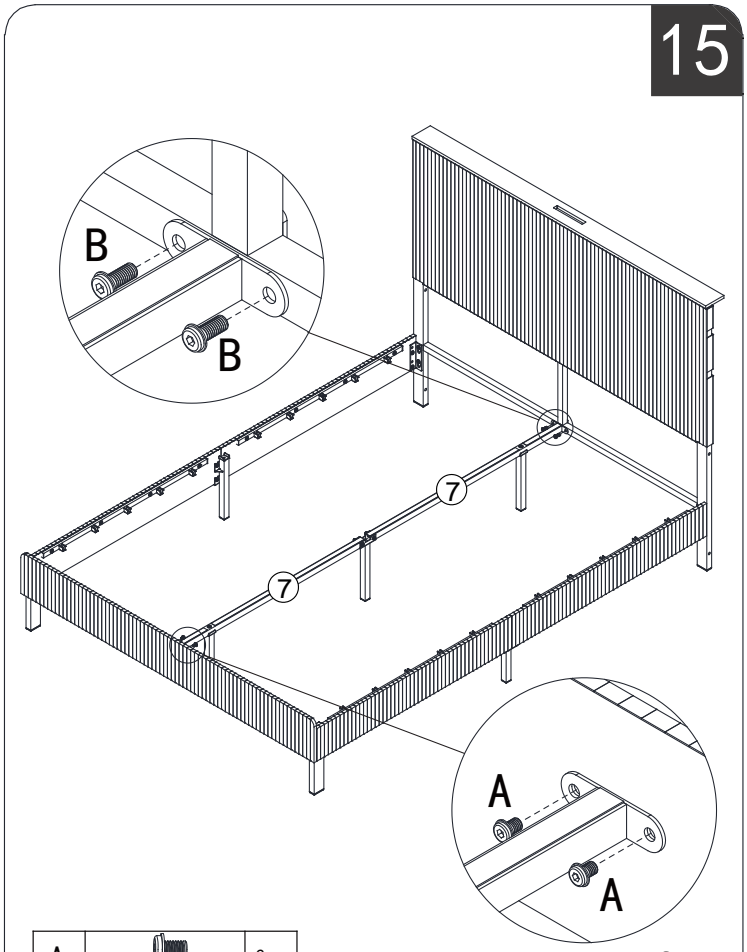

To assemble first

A	M8x12	2pcs
B	M8x20	2pcs

16

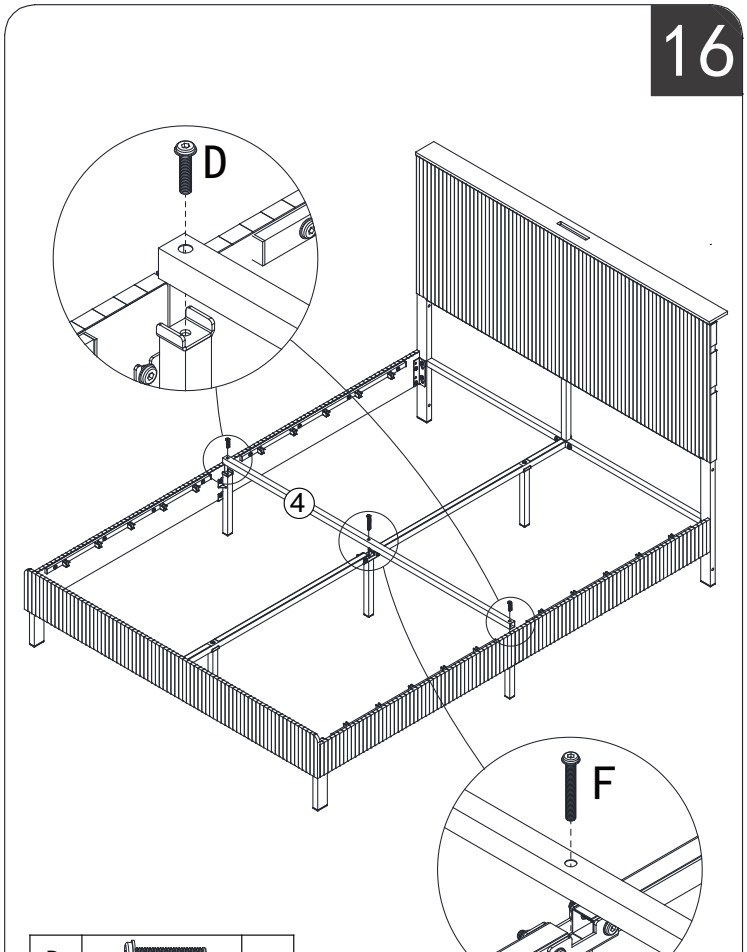

D	M8x35	2pcs
F	M8x60	1pc

17

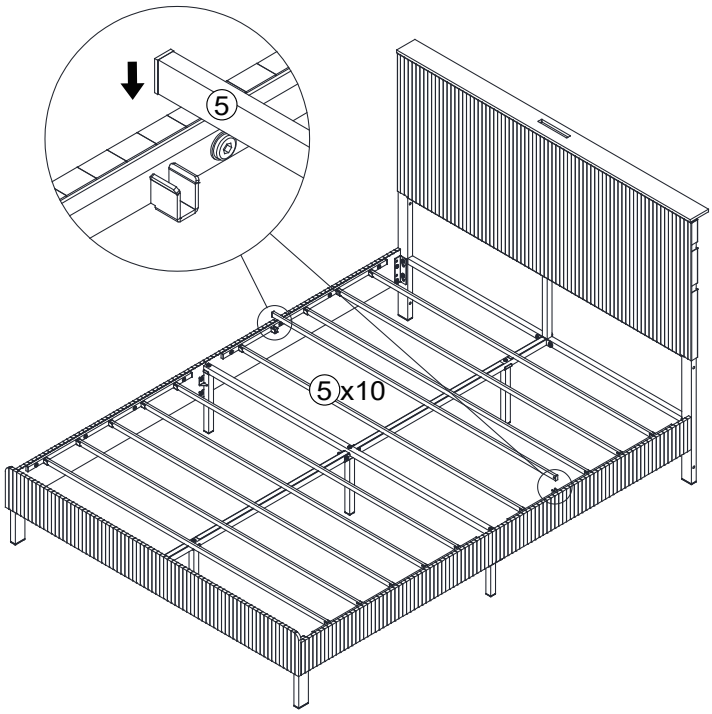

18

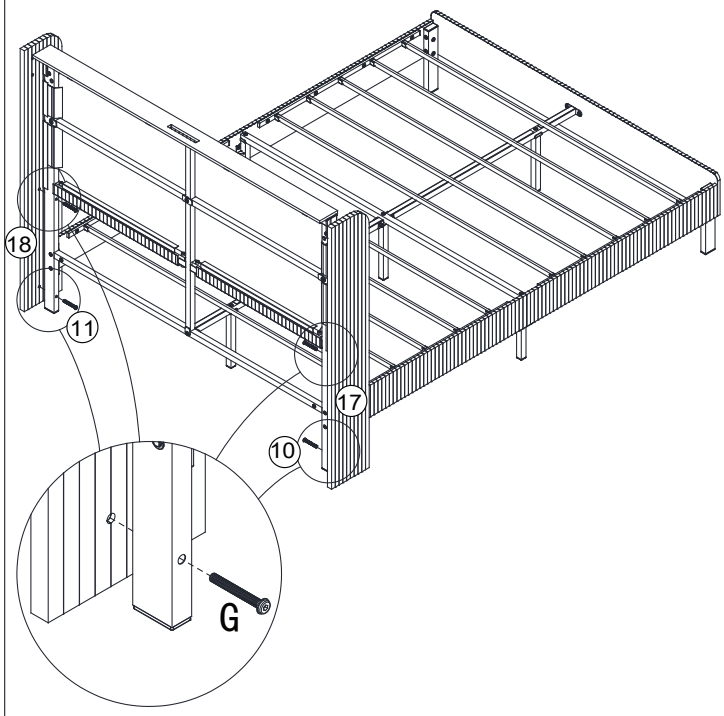

G	M8x65	4pcs	white zinc

19

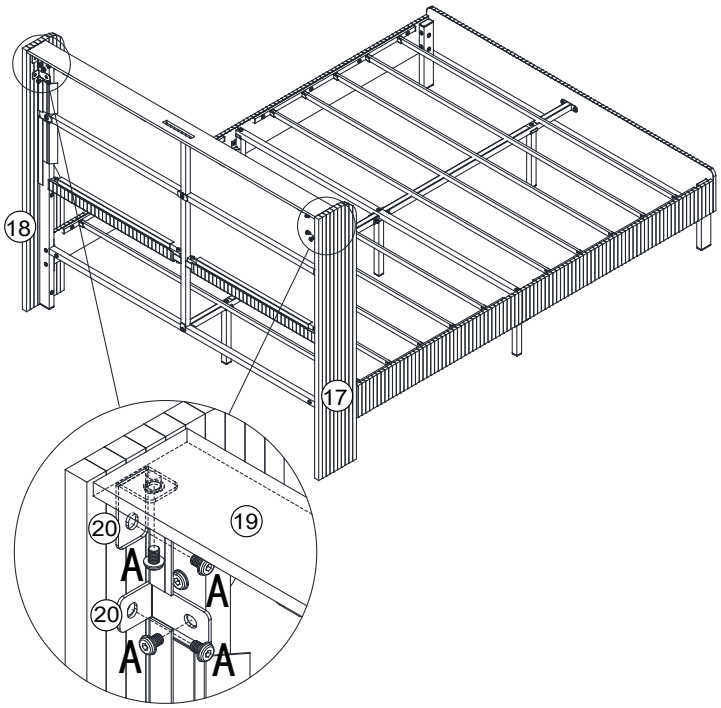

A	M8x12	8pcs

20

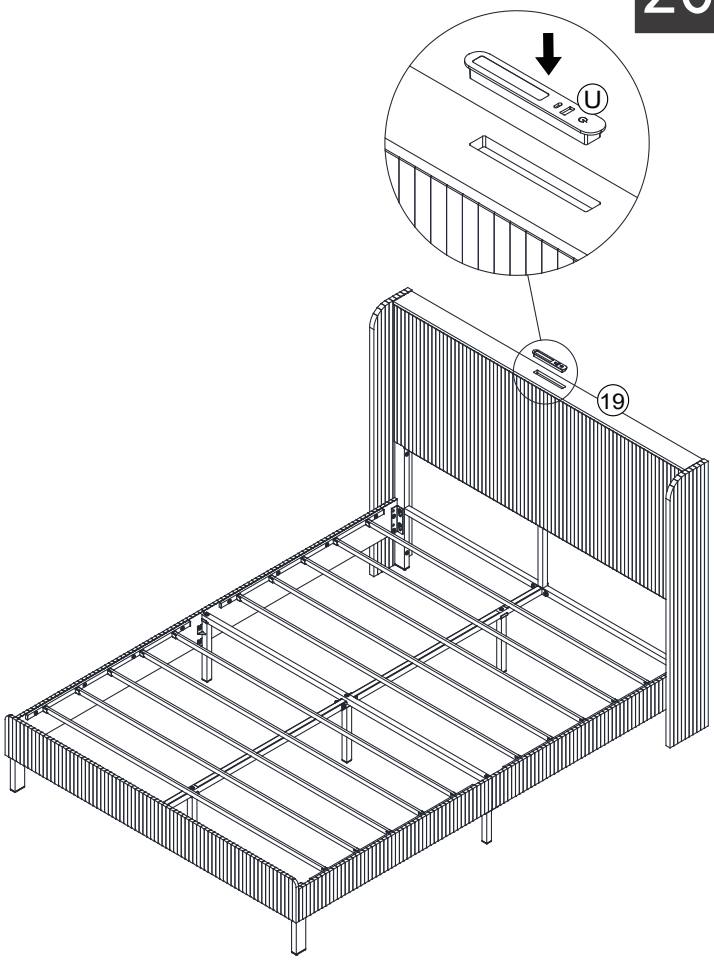

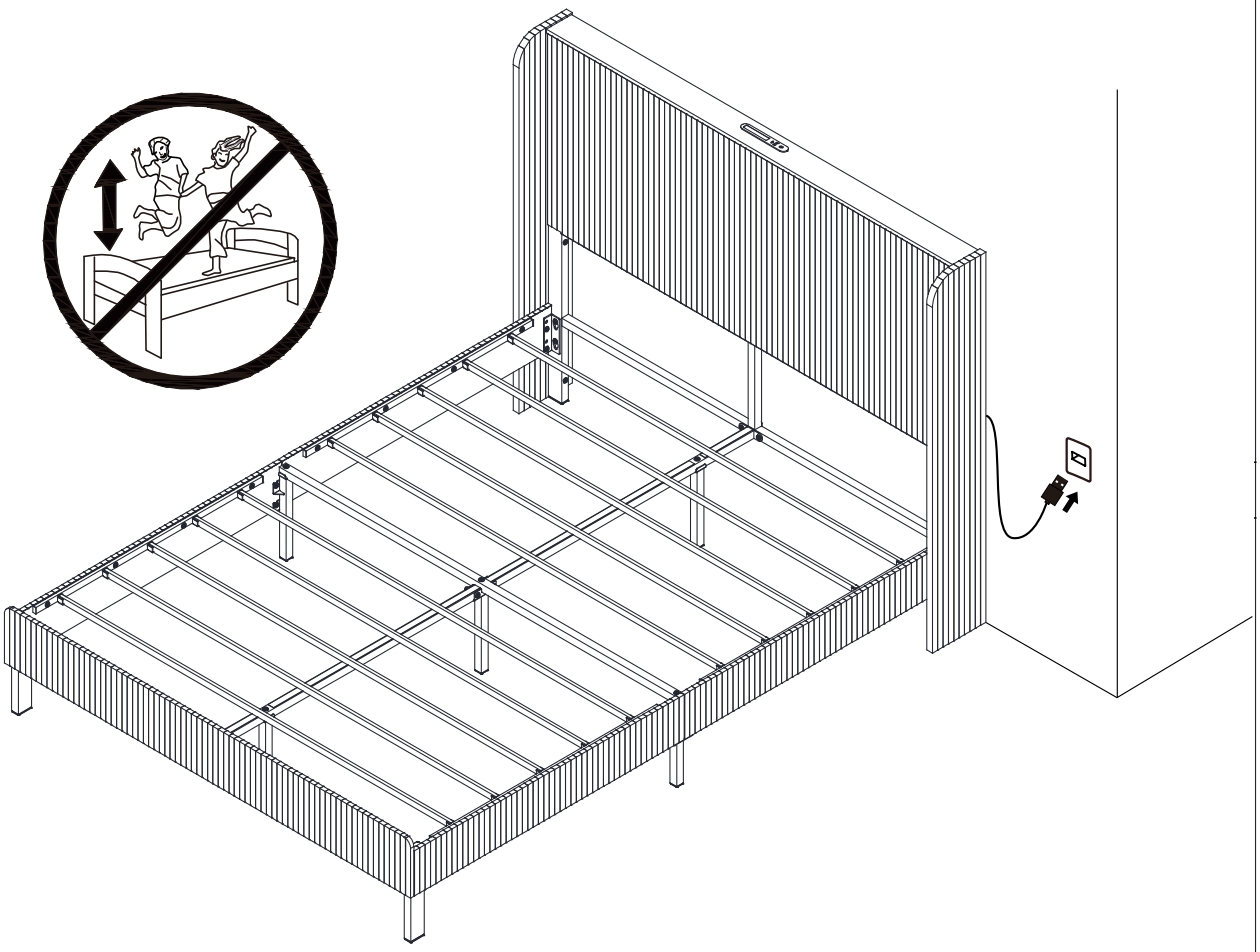

Finish