PRODUCT SPECIFICATION

Model: QT-710-PK1

Series	Quartz QT Series
Material	80% quartz / 20% acrylic resin
Installation Type	Top mount / Drop-in
Configuration	Double equal bowl
Finish	Matte finish
Overall Dimensions	33" x 22" x 9 5/8"
Bowl Dimensions	14 3/8" x 16 7/8" x 9"
Drain Size	3 1/2"
Colors Available	Bisque, Concrete, White, Black, Grey, Brown
Minimum cabinet size	36"
Template Included	Yes
Clips Included	Yes
Heat Safe	Up to 535°F
Resistant to	Stain, scratch, abrasion, impact
Drain Locations	Rear
Accessories Included	Strainer (x2), Bottom grid (x2) and Luster Pro oil

Shown in Concrete

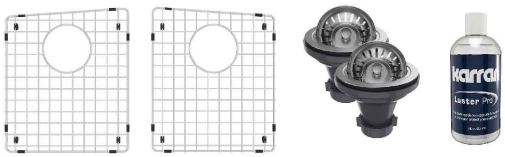

ACCESSORY
Strainer - L-1 x2
Bottom Grid - GR-6005
Bottom Grid - GR-6006
Luster Pro oil

Stocked Color Options

- BISQUE - BI
- CONCRETE - CN
- WHITE -WH
- BLACK - BL
- GREY - GR
- BROWN - BR

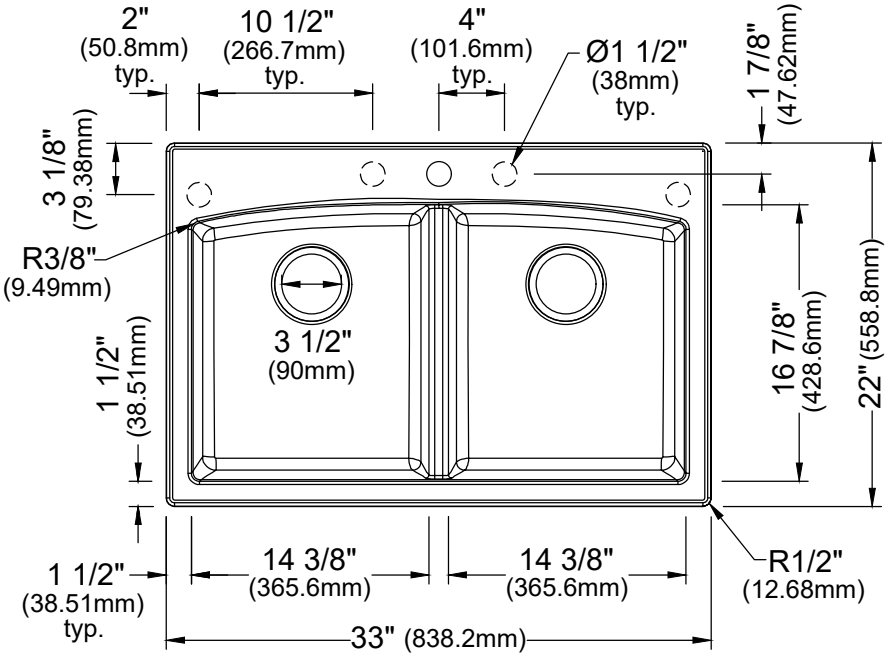

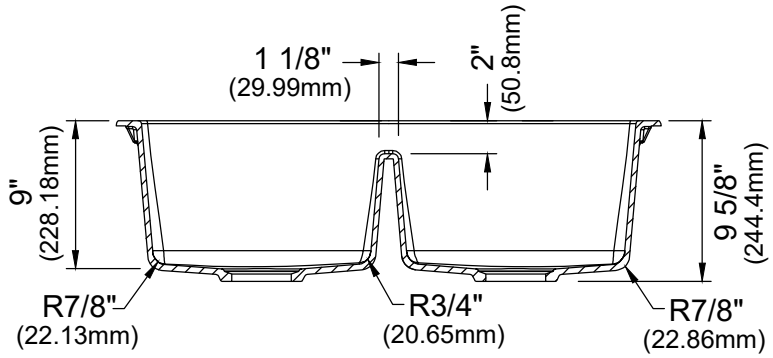

Listing and certifications:
cUPC

Limited lifetime warranty

◯ = pre-drilled faucet / drain hole
◌ = semi-drilled knock-out location(s)

We reserve the right to update product specifications without notice. Please visit karran.com for the most current specification sheets. All dimensions are accurate to 1/4". REV 06-2026