NEED HELP?

Reach out, it's easy!

www.vikiohome.com info@vikiohome.com 1-888-213-4550

Monday–Friday, 9:00 AM–5:00 PM PST

VIKIO
HOME

USER MANUAL

Wall-mount Range Hood

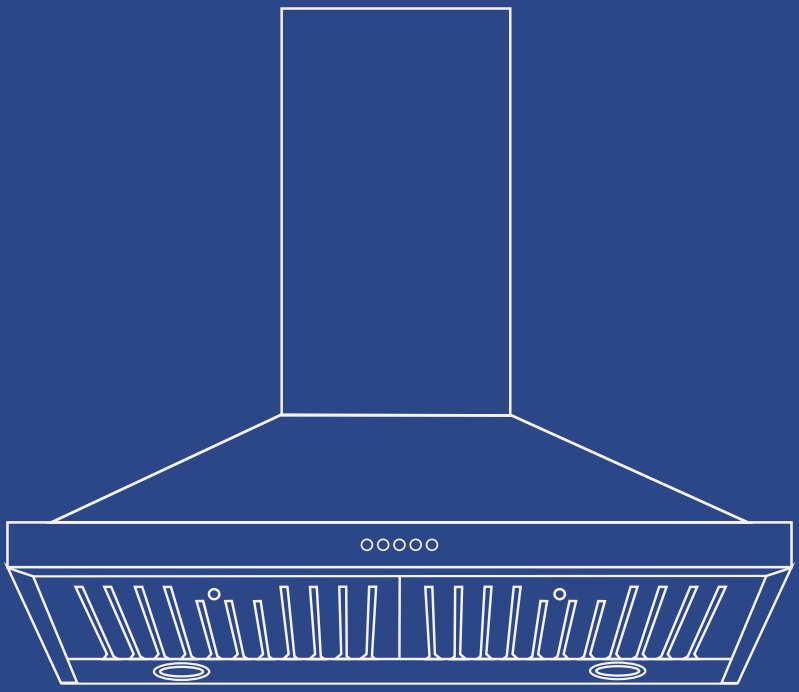

Model Name: RP05
Available Sizes: 24" /30" / 36"

Who are we ?

VIKIO HOME brings thoughtful design and intelligent
innovation to the modern kitchen.
We believe great kitchen experiences come from
the balance of function, efficiency,
and refined aesthetics.
That's why we create products designed to work beautifully,
fit naturally, and make everyday living a little better.

Thank you for being a part of VIKIO HOME.
We hope you enjoy our products as much as
we enjoy creating them for you.

VIKIO
HOME

Pure Kitchen. Better Living.

APPLIANCE SERIES



Under Cabinet Range Hoods Series



Wall-mounted Range Hoods Series



Insert Range Hoods Series



Island Range Hoods Series



Built-in Oven Series



Gas Cooktop Series



Ceramic Cooktop Series



Wine Cooler Series

More Products Coming Soon...

IMPORTANT:
TEST BEFORE INSTALLATION!

Conduct a power and basic function test immediately
after unpacking and BEFORE installation.
This step verifies the device arrived undamaged during shipping.

PLEASE INSTALL ONLY AFTER TESTING

TO AVOID DISASSEMBLY COSTS

www.vikiohome.com

info@vikiohome.com

1-888-213-4550
1-888-214-0999
Mon–Fri, 9:00 AM–5:00 PM PST
Response guaranteed within 24 hours on business days.

CONTENTS

01
IMPORTANT SAFETY INSTRUCTIONS
3

02
KNOW YOUR RANGE HOOD
6

03
BEFORE YOU INSTALL
9

04
INSTALLATION
17

05
CLEANING & MAINTENANCE
30

06
TROUBLESHOOTING
35

07
WARRANTY & SUPPORT
38

HOW TO USE THIS MANUAL

Homeowner: read **01** Important Safety Instructions and **02** Know Your Range Hood.
Installer: follow **03 - 04** in order. Keep this manual for future reference.

IMPORTANT SAFETY INSTRUCTIONS

01

Before beginning installation, please read and follow these important instructions to ensure the safety of your home and its occupants.

WARNING

FAILURE TO FOLLOW THE INSTRUCTIONS IN THIS MANUAL PRECISELY MAY RESULT IN A FIRE OR EXPLOSION THAT CAUSES PROPERTY DAMAGE, PERSONAL INJURY, OR LOSS OF LIFE.



DO NOT install alone. Two people are required to move and install this hood.



DO NOT put your hand into the fan area while it is operating.



DO NOT operate the hood without its filters in place.



DO NOT spray water or cleaners directly onto electrical wiring, the motor, the control panel or light bulbs.

GENERAL SAFETY

• The instructions in this manual are intended for qualified installers and certified service technicians. Installation and electrical wiring must be completed by qualified professionals in accordance with applicable codes and standards.

• DO NOT attempt to install this appliance by yourself. Improper installation may result in injury due to the lack of appropriate electrical and technical expertise.

• The installer should leave these instructions with the homeowner, who should retain them for reference by local inspectors and for future use.

• Due to the size and weight of Vikio Home's range hoods, two-person installation is highly recommended.

• Handle the range hood, chimney cover, baffle filters, and any parts or accessories with care, as sharp edges may cause injury. Wearing gloves during installation is highly recommended.

• The manufacturer is not responsible for any property damage or personal injury caused by incorrect installation, improper use of the appliance, or failure to follow the listed warnings.

• The manufacturer reserves the right to make changes to its products when deemed necessary and beneficial, without affecting essential safety or operational features.

VENTING SAFETY

• This appliance is designed for general ventilation use only. DO NOT use it to exhaust hazardous or explosive materials and vapors.

• Ducted range hoods must ALWAYS be vented outside the home, or in some cases, converted for air re-circulation.

• Some existing installations may already have an external damper at the home's exhaust point. In such cases, the damper in your hood's transition piece **MUST BE REMOVED**, as having two dampers can interfere with airflow and reduce the hood's performance.

• The operation of this unit may affect the airflow required for the safe operation of fuel-burning equipment. Follow heating equipment guidelines and safety standards such as those published by the National Fire Protection Association (NFPA), the American Society of Heating, Refrigerating and Air-Conditioning Engineers (ASHRAE), and local codes and authorities.

• Ensure sufficient airflow for proper combustion and exhaust of gases through the ductwork to prevent back-drafting.

• When a range hood ventilates air out of the room, that air must be replaced — this is known as makeup air. Without a makeup air system (if required), the hood may not operate effectively due to negative air pressure.

• VIKIO HOME does not currently supply makeup air units. Always consult local building codes regarding minimum and maximum airflow requirements. Some states may require additional components, such as makeup air systems, for high-CFM range hoods.

• Consult an HVAC or installation professional to ensure compliance with local regulations and proper ventilation.

• When cutting or drilling into walls or ceilings, take care not to damage electrical wiring or other hidden utilities.

• Old ductwork should be cleaned or replaced, if necessary, to avoid grease buildup or fire hazards. Check all duct joints to ensure they are properly connected and sealed.

ELECTRICAL SAFETY

• All electrical wiring must be properly installed, insulated, and grounded. VIKIO HOME range hoods come with a grounded 3-prong plug that must be connected to a dedicated 15-amp circuit. Tampering with the plug or cutting the electrical cord will void your warranty.

• Electrical installations must comply with the National Electrical Code ANSI/NFPA 70 (latest edition) and/or local codes.

• Before servicing or cleaning the unit, fully disconnect it from the power source to avoid the risk of electric shock and injury.

OPERATION SAFETY

• Keep the motor, fans, baffle channels, filters, tunnels, grease cups, and all grease-laden surfaces clean. Grease buildup inside or on the range hood should be avoided by cleaning these areas regularly.

• Be cautious when cleaning the range hood with spray products: never spray water or cleaners directly onto electrical wiring, the motor, the control panel, or light bulbs.

• After installation, use a stainless steel cleaner or cloth to remove any residue left by the protective film.

FOR HOUSEHOLD USE ONLY

Reminder
Check the appliance regularly. Refer to **6.1 Troubleshooting** or contact Customer Support if the range hood has any of the following problems:
• Power cord or plug is damaged • Unusual noise, burning odor or excessive heat.

Specifications
Model No.
Input
Rated Power
Size

KNOW YOUR RANGE HOOD 02

2.1 PACKAGE CONTENTS

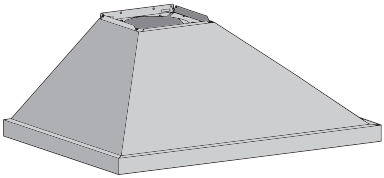

❶ **Range Hood Body**

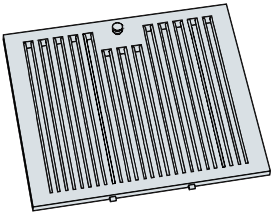

❷ **Baffle Filters**

Before installing, remove the protective white film

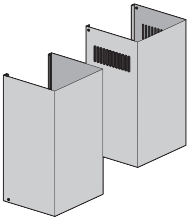

❸ Upper Chimney Portion
Lower Chimney Portion

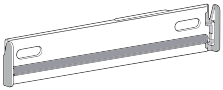

❹ Mounting Bracket

4 x 30 mm mounting screws (11)

3 x 10 mm screws (4)

8x 35 mm wall anchors (11)

NOTE

Where necessary, additional screws will be needed for installation and added support, but are not included. Please review the parts before installation.

2.2 PREPARE THE TOOLS

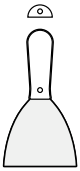

Putty Knife

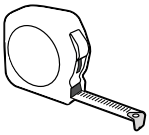

Tape Measure

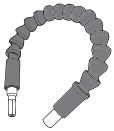

Screw Extension Adapte

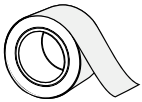

Aluminum Tape

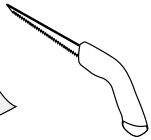

Drywall Knife

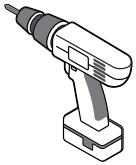

Power Drill

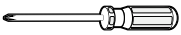

Phillips Screwdriver



Pencil

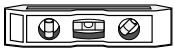

Level



Utility Knife

2.3 DIMENSIONS

24" Model: RP05-24/ RP05-24B
30" Model: RP05-30/ RP05-30B
36" Model: RP05-36/ RP05-36B

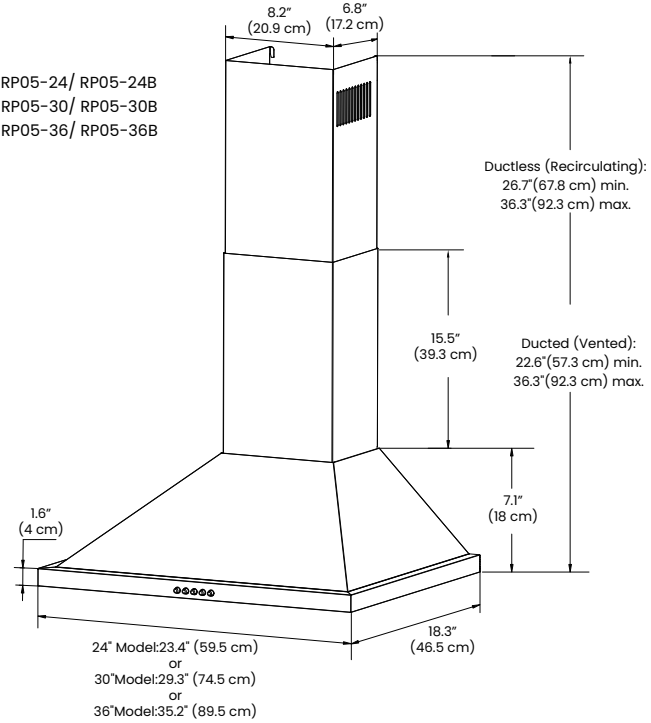

2.4 RANGE HOOD USE

The range hood is designed to remove smoke, cooking vapors and odors from the cooktop area. For best results, start the range hood before cooking and allow it to operate several minutes after the cooking is complete to clear all smoke and odors from the kitchen.

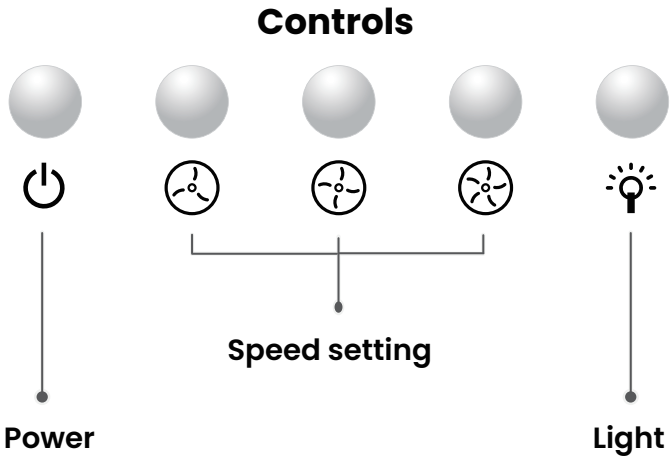

ON / OFF

Press ⏻ Power button once to turn on/off the system.

- When the switch is off, the fan is also turned off.

SPEED

Press the Speed button to choose the speed.

- The indicator shows the current speed; when it is off, the fan is off.
- When you turn the hood on again, the fan speed will be the same as when you last turned it off.

LIGHT

Press the Light button to turn the lighting on or off.

- Indicator on: lighting is on. Indicator off: lighting is off.
- LED lights are individually controlled.

BEFORE YOU INSTALL

03

3.1 PREPARATION

WARNING
EXCESSIVE WEIGHT

This range hood requires two or more people to move and install. Failure to heed this warning may result in spinal or other bodily injury.

WARNING
SEVERE INJURY

Rotating fan can cause severe injury. Stay clear of the fan when the motor is running.

BEFORE YOU START

- Familiarize yourself with the controls. See 2.4 Range Hood Ues.
- Place the range hood on a flat, stable surface. Connect it to a designated standard outlet (refer to the product label for the correct voltage) and turn the range hood on. Verify all functions are working correctly.
- Place all supplied parts and required hardware on a flat, stable surface, and check to ensure no parts are missing.
- Carefully remove the white or blue plastic protective coating from the range hood's surface.

3.2 VENTING PREPARATION

- Decide on the location of the venting pipe from the hood to the outside. Refer to Venting Methods (see 3.6) for more information.
- A straight, short vent will allow the hood to perform more efficiently.
- Avoid transitions, elbows, and long duct runs. They reduce airflow.
- Using 45° elbows is better than using 90° elbows.
- **IMPORTANT:** Peel the white or blue plastic protective coat off the hood if it's there.
- Use aluminum foil tape to seal joints between pipe sections.

NOTE

To avoid damage to your hood, make sure no objects enter the vent opening.

3.3 ELECTRICAL REQUIREMENTS

IMPORTANT: Observe all governing codes and ordinances.

It is the customer's responsibility:

• To contact a qualified electrician.

• To ensure that the electrical installation is adequate and in conformance with the National Electrical Code, ANSI/NFPA 70 — latest edition*, or CSA Standards C22.1-94, Canadian Electrical Code, Part 1 and C22.2 No. 0-M91 — latest edition**, and all local codes and ordinances.

If codes permit and a separate ground wire is used, a qualified electrician should verify that the grounding path is adequate. A 120-Volt, 60 Hz, AC-only fused electrical supply is required on a separate 15-amp circuit.

• DO NOT ground to a gas pipe.

• Check with a qualified electrician if you are not sure that the range hood is properly grounded.

• DO NOT have a fuse in the neutral or ground circuit.

IMPORTANT: Save this Installation Guide for your electrical inspector's use.

• The range hood must be connected with copper wire/plug only.

• The range hood should be connected directly to the fused disconnect (or circuit breaker) box through flexible armored or non-metallic sheathed copper cable.

• A U.L.- or C.S.A.-Listed strain relief must be provided at each end of the power supply cable.

• Wire sizes (copper wire only) and connections must conform with the rating of the appliance as specified on the model/serial rating label, and with the requirements of the National Electrical Code ANSI/NFPA 70 — latest edition*, or CSA Standards C22.1-94, Canadian Electrical Code Part 1 and C22.2 No. 0-M91 — latest edition**, and all local codes and ordinances.

• A U.L.- or C.S.A.-listed conduit connector must be provided at each end of the power supply cable (at the range hood and at the junction box).

* ANSI/NFPA 70 (latest edition) ** CSA C22.1-94 / C22.2 No. 0-M91 (latest edition)



WARNING
HAZARD OF ELECTRICAL SHOCK!

DO NOT perform service on an electrically-live system. Disconnect the main electrical supply before fixing this device. Touching electrical connectors or other exposed electrical circuitry inside this range hood when they are energized could result in death, serious bodily injury or property damage.

3.4 POWER OUTLET & POWER CORD LOCATION

Power cord position (top view of hood)

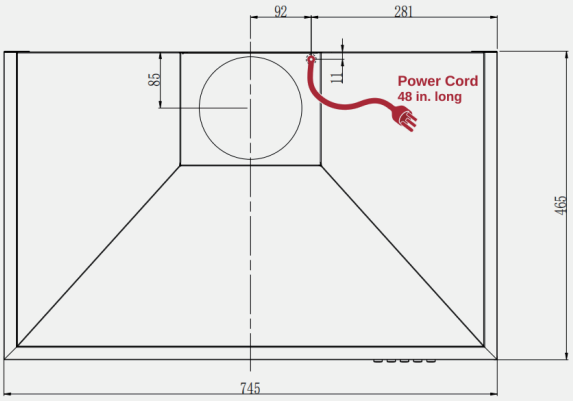

Shown: 30" model (RP05-30/ RP05-30B). Dashed circle = power cord exit. Dimensions in mm

DIMENSION	mm	in
Hood width /depth	745 / 465	29.3 / 18.3
Cord exit: right of duct centerline	92	3.6
Cord exit: from right edge	281	11.1
Cord exit: from back edge (wall side)	11	0.4

- The power cord exits from the top rear of the hood, on the **right side when facing the hood,** close to the wall and to the right of the duct connector.
- Grounded 3-prong plug. Cord length 48 in (1.22 m), with a strain relief at the cord exit.

Recommended outlet location

- Place the outlet on the wall **upper right of the hood, within the area covered by the**
- **chimney,** and within easy reach of the cord.
- Keep the outlet clear of the duct connection, duct elbow, wall duct opening and bracket drilling points. The hood must not press against the outlet or plug when mounted. The plug must stay accessible after installation.

NOTE: Decide the venting method (roof / wall / ductless) and duct route first, then confirm the outlet position.
Use a grounded 120 V/ 60 Hz outlet. DO NOT use an extension cord. DO NOT cut the plug or splice the cord.

3.5 Cabinet Clearances

Given dimensions are minimum clearances.

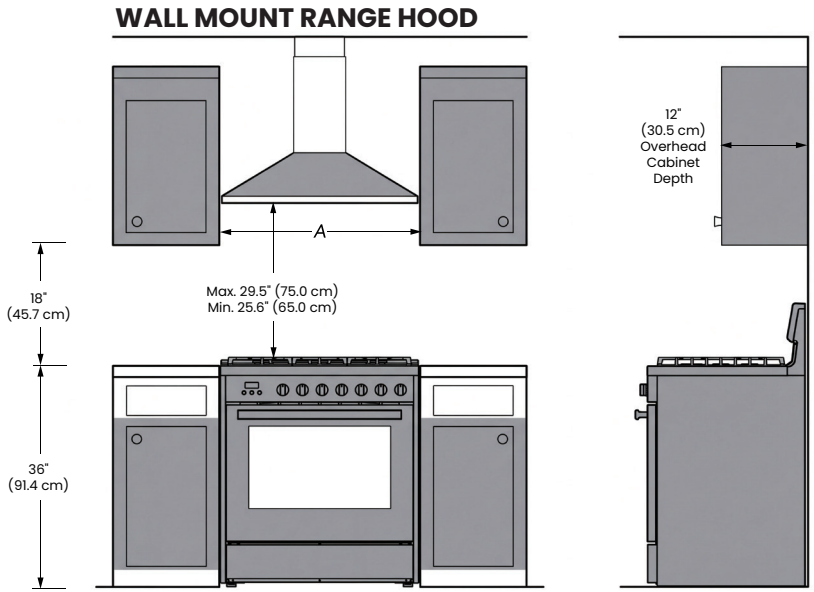

MODEL	A
24" Model: RP05-24/RP05-24B	23.4" (59.5 cm)
30" Model: RP05-30/RP05-30B	29.3" (74.5 cm)
36" Model: RP05-36/RP05-36B	35.2" (89.5 cm)

IMPORTANT:

- 25.6" (65.0 cm) minimum and 29. 5" (75.0 cm) suggested maximum clearances between cooking surface and bottom of the range hood.

3.6 Venting Requirements

(Ducted installations only)

- Duct system must terminate to the outdoors, except for ductless (recirculating) installations.
- Do not terminate the duct system in an attic or other enclosed area.
- Do not use 4" (10.2 cm) laundry-type wall cap.
- Use metal duct only. A rigid metal duct is recommended. Plastic or metal foil duct is not recommended.
- The length of duct system and number of elbows should be kept to a minimum to provide efficient performance.

For the most efficient and quiet operation:

- Use rigid metal duct.
- Use no more than three 90° elbows.
- Make sure there is a minimum of 25.6" (65.0 cm) of straight duct between the elbows if more than 1 elbow is used.
- Do not install 2 elbows together.
- Use clamps to seal all joints in the duct system.
- The duct system must have a damper. If the roof or wall cap has a damper, do not use the damper supplied with the range hood.
- Use caulking to seal exterior wall or roof opening around the cap.
- The size of the duct should be uniform.

Cold Weather Installations:

An additional backdraft damper should be installed to minimize backward cold air flow and a thermal break should be installed to minimize conduction of outside temperatures as part of the duct system. The damper should be onthe cold air side of the thermal break.

The break should be as close as possible to where the duct system enters theheated portion of the house.

Makeup Air:

Local building codes may require the use of makeup air systems when using ventilation systems greater than specified CFM of air movement. The specified CFM varies from locale to locale. Consult your HVAC professional for specific reauirements in your area.

3.6 VENTING METHODS

- This range hood is factory set for venting through the roof or through thewall. The exhaust opening is 6" (15.2 cm) round. A 6" (15.2 cm) round ductsystem is recommended. The duct system needed for installation is not included.
- If it is not possible to vent cooking fumes and vapors to the outside, the range hood can be used in the ductless (recirculating) version, using a charcoal filter kit. This spares is not provided, please buy it individually if need.
- If you need to do a ductless installation, please follow the installation steps without installing an aluminum pipe. And install the charcoal filters.

DO'S AND DON'TS FOR DUCT VENTING

1. Use 45° elbows instead of sharp 90° elbows.

2. DO NOT use reducers. Keep the duct the same size as specified. A reducer lowers airflow (CFM) and raises noise.

3. DO NOT use plenum boxes. They create turbulence and reduce efficiency. Use a smooth elbow to guide air outdoors.

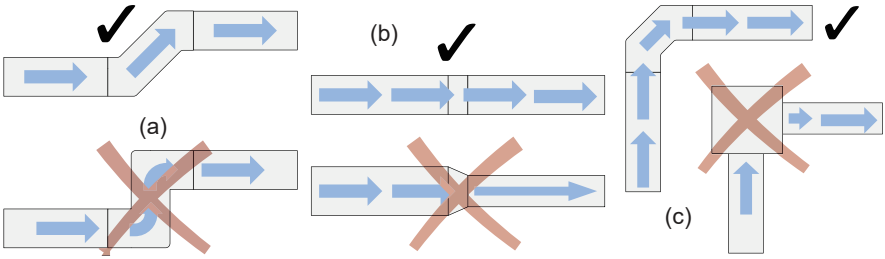

NOTE:

If exhaust ducting is less than 5.91" (15.0 cm) in diameter or if flat ducting is used, the noise level of the range hood may increase and the exhaustion may be less efficient.

Roof Venting

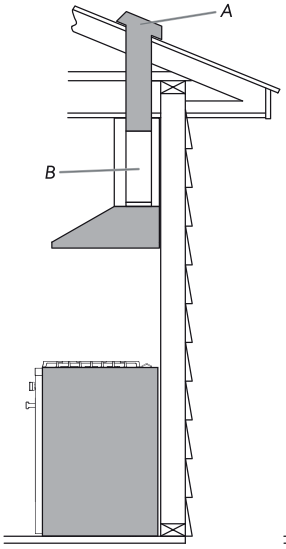

A. Roof cap
B. 6" (15.2 cm) round duct

Wall Venting

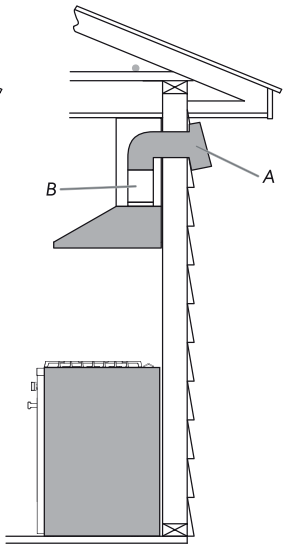

A. Wall cap
B. 6" (15.2 cm) round duct

Ductless (Non-Vented)

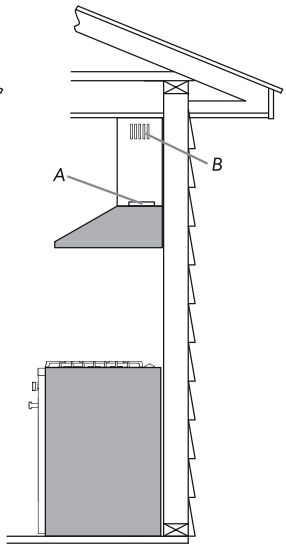

A. Duct opening
B. Chimney venting holes

3.7 CALCULATING DUCT SYSTEM LENGTH

The recommended duct system is 6" (15.2 cm) round duct with a maximum length of 35 ft (10.7 m). For the best performance, use no more than three 90°elbows.

To calculate the length of the system you need, add the equivalent feet (meters) for each duct piece used in the system.

DUCT PIECE	6" (15.2 cm) Round	
45"elbow	2.5ft (0.8m)	
90"elbow	5.0ft (1.5m)	

Maximum equivalent duct length is 35 ft (10.7 m).

Example Duct System -6" (15.2 cm)

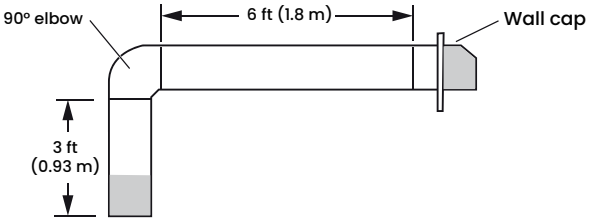

MAXIMUM LENGTH	=35 ft (10. 7 m)
1- 90° elbow	=5.0 ft (1.5 m)
1-wall cap	=0.0 ft (0.0 m)
6 ft (1.8 m) straight	=6.0 ft (1.8 m)
3ft (0.9 m) straight	=3.0 ft (0.9 m)
System length	=14.0 ft (4.3 m)

INSTALLATION

4.0 PRE-INSTALLATION

04

WARNING
TEST BEFORE INSTALLATION

Test power and basic functions before installing. VIKIO HOME is not responsible for extra labor costs caused by re-installation due to shipping damage or wiring issues.

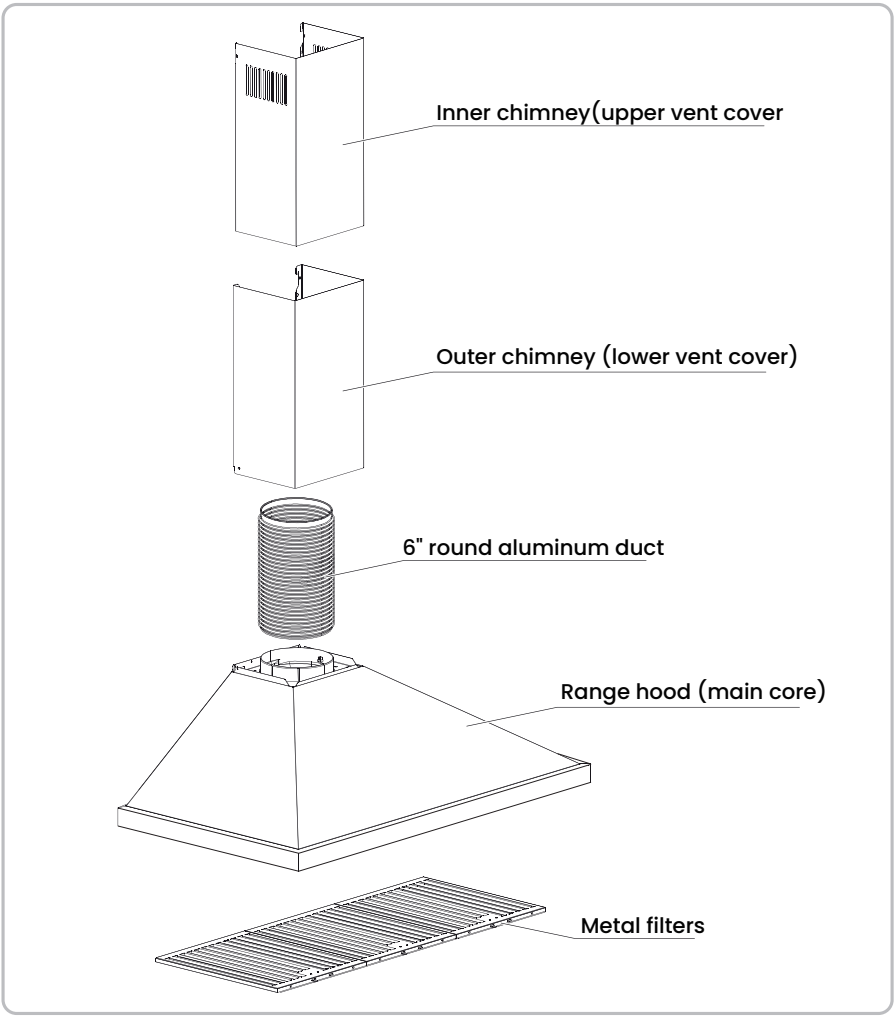

Prepare Location

- It is recommended that the duct system be installed before the range hood is installed.
- Before making cutouts, make sure there is proper clearance within the ceiling or wall for duct fittings.
- Remove installations parts carefully. Wear hand gloves to protect against sharp edges.
- Remove the foams, tapes, and protective films covering the product before putting it into operation.



WARNING
HAZARD OF ELECTRICAL SHOCK!

DO NOT perform service on an electrically-live system. Disconnect the main electrical supply before fixing this device. Touching electrical connectors or other exposed electrical circuitry inside this range hood when they are energized could result in death, serious bodily injury or property damage.

WARNING
SEVERE INJURY

Rotating fan can cause severe injury.
Stay clear of the fan when the motor is running.

1. Disconnect power.
2. Determine which venting method to use: roof, wall, or ductless.
3. Select a flat surface for assembling the range hood. Place covering over that surface.
4. Using 2 or more people, lift range hood onto covered surface.

4.1 Brackets Installation

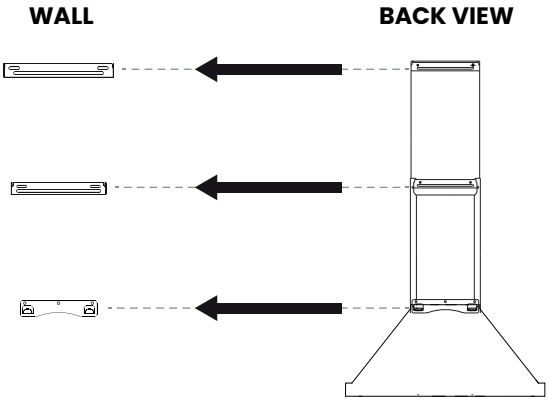

Range Hood Mounting Bracket

WARNING
EXCESSIVE WEIGHT HAZARD

- Use two or more people to move and install range hood.
- Failure to do so can result in back or other injury.

1. Determine and mark the vertical centerline on the wall where the range hood will be installed.

2. Select a mounting height between a minimum of 25.6" (65.0 cm) and a suggested maximum of 29. 5" (75.0 cm) above the cooktop/range to the bottom of the range hood. Mark a horizontal line on the wall referencing the bottom of the range hood.

NOTE:

Make sure the chimney can reach the ceiling.
For wall venting, it isnot necessary for the chimney to be in contact with the ceiling.

3. Place range hood on the wall above the horizontal reference line, and make sure it is level. Mark the mounting slots on back of range hood onthe wall, and rest range hood on covered surface.

4. Align the mounting arms on range hood mounting bracket with the mounting slot markings on the wall, and make sure it is level. Mark centers of the (3) mounting screw locations on the wall.

IMPORTANT:

• All mounting screws must be installed into wood stud where possible. If there is no wood stud to screw into, additional wall framing supports may be required, or use the 8 x 35 mm wall anchors with the 4 x 30 mm screws.

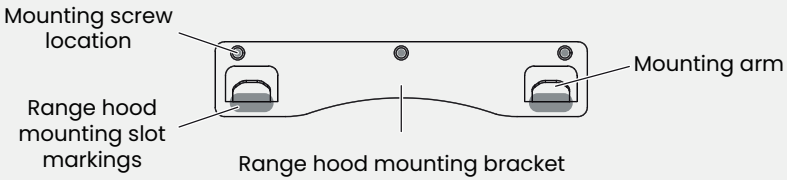

5. For wood, drill 5/32" (4mm) pilot holes at all locations where mounting screws are being installed into wood.
For wall anchors, drill 5/16" (8 mm) holes at all locations where wall anchors are being used.

6. Secure the mounting bracket on the wall with (3) mounting screws.
For wood, install the 4 x 30 mm mounting screws.
For waii anchors, instail the 8 x 35 mm wall anchors and install the 4 x 30mm mounting screws into the wall anchors.

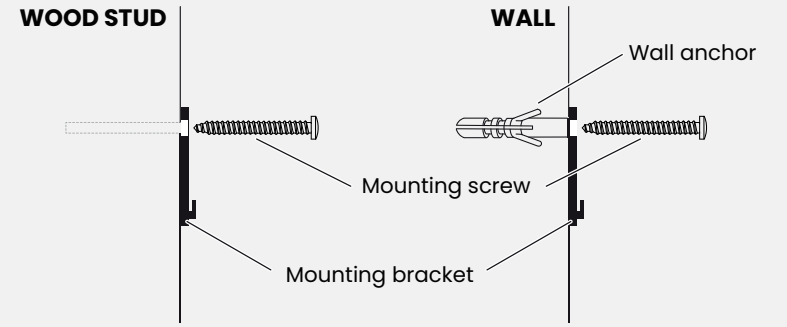

4.2 Back Panel Fixing Holes

IMPORTANT: THE BRACKET ALONE DOES NOT SECURE THE HOOD

The mounting bracket carries the hood's weight. The two fixing holes in the back panel must also be screwed to the wall, otherwise the hood may rock or be lifted off the bracket.

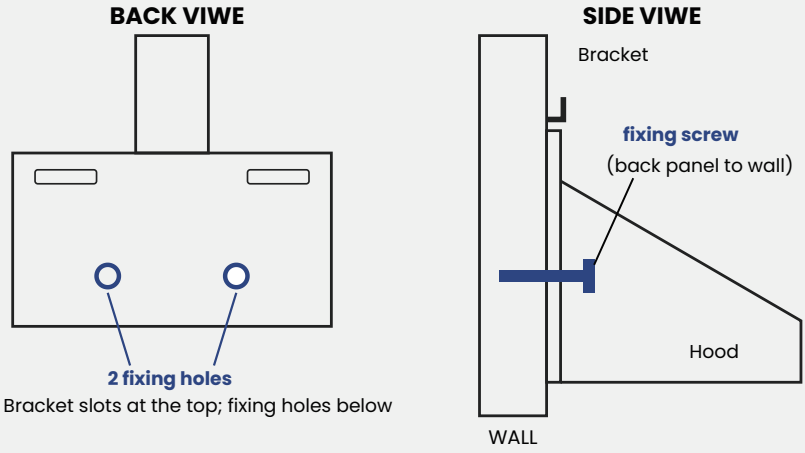

Schematic only. Hole positions are shown for illustration.

How to fix the hood (done together with the bracket installation)

1. With **two people**, hang the hood on the wall bracket. Adjust until level, flush with the wall, with no front-to-back movement.
2. Through the **two fixing holes in the back panel,** mark the hole positions on the wall.Then, with two people, lift the hood off the bracket and rest it on a covered surface.
3. . Drill according to the wall type. **Wood stud or backing board:** 5/32" (4 mm) **pilot holeSolid wall (brick/concrete / masonry) only:** 5/16" (8 mm) hole, then insert the wallanchor. In a hollow wall, plastic anchors alone must not be used. See 4.3.Before drilling, make sure there are no electrical wires, water pipes or gas lines behindthe wall.
4. Hang the hood back on the bracket and confirm it is level and flush. Insert **2 fixing screws** through the two back panel holes and tighten, so the hood cannot be lifted offand does not wobble.

4.3 STUDS & HOLLOW WALLS

- A wood stud is **narrow**: its face is only about 1-1/2" (38 mm) wide, and studs aretypically 16" (406 mm) apart, center to center (sometimes 24"). Use a stud finder andmark both edges and the **centerline** of each stud.
- Bracket holes and the two back panel fixing holes must land on a **stud centerline** or on a **backing board** fixed to the studs.

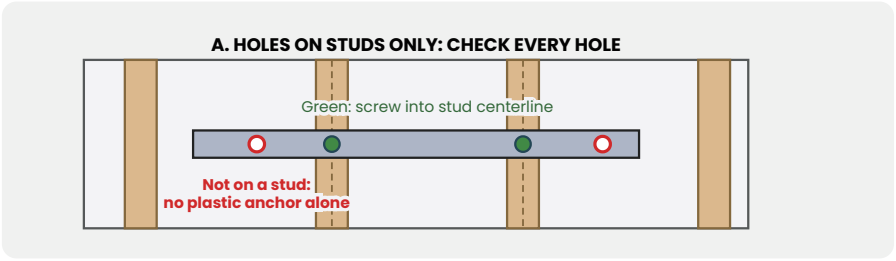

HOLLOW WALL: PLASTIC ANCHORS ARE NOT ENOUGH

If any bracket hole or back panel fixing hole does not land on a stud, **do not rely on plastic wall anchors alone.** Add a backing board fixed into the wall studs to carrythe hood's weight, and mount the bracket to the board.

HORIZONTAL BLOCKING (WALL CAN BE OPENED)

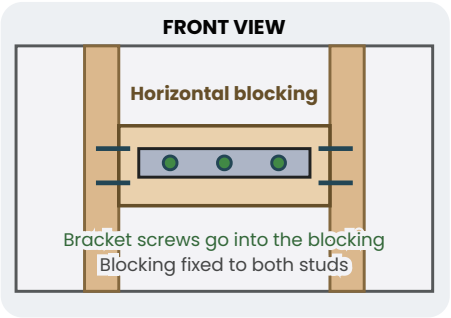

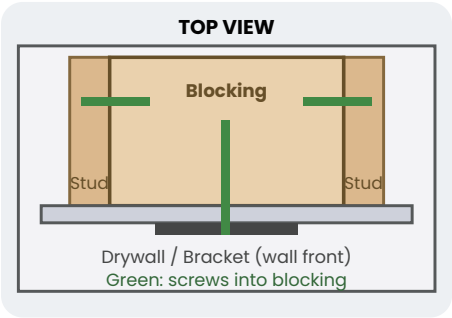

1. Open the wall. Between two studs, install a **horizontal wood block**: 2x lumber, same depth as the studs, front face flush with the studs.
2. Fix both ends to the studs with screws through the studs into the block.
3. Position it so all bracket holes and both back panel fixing holes land on it. Use two blocks if the holes are too far apart.
4. Close the wall, then mount the bracket on the blocking with the mounting screws.

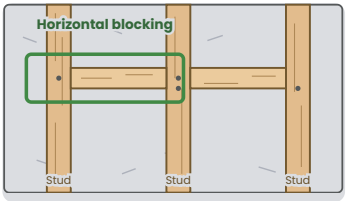

Example: blocking fixed between studs.

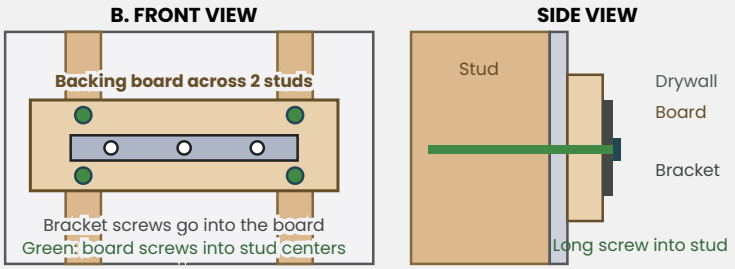

1. **Stud at the hole:** drill a 5/32" (4 mm) pilot hole in the **center** of the stud face.
2. **Hole not on a stud**: install a backing board first, before the bracket. Use mini-mum 3/4"(19 mm) plywood or 2x lumber, long enough to span at least 2 studs and to cover allbracket holes and both back panel fixing holes. Fix it with long screws through thedrywall into the center of each stud.
3.**Wall anchors (8 x 35 mm)**: only for solid walls such as brick, concrete or masonry.

NOTE A board on the wall surface moves the hood forward by the board's thicknessCheck chimney fit and cabinet clearance. The chimney support brackets must also be fixed to a stud or the board.

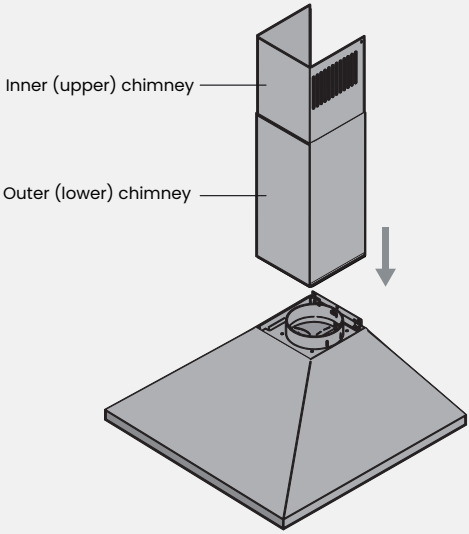

NOTE:

To help prevent scratches, lay paper or a kitchen towel over thetop edges of the outer (lower) chimney to protect the surface.

Chimney (Vent Cover) Support Brackets

IMPORTANT:

The inner (upper) chimney support bracket is slightly longer than the outer (lower) chimney support bracket.

1. Using 2 or more people, hang range hood on mounting bracket through the mounting slots on back of range hood.

2. Place both inner (upper) and outer (lower) chimneys onto hood. The inner chimney must slide into the outer chimney.

3. Lift inner (upper) chimney to ceiling. Using a pencil, mark on the wall adjacent to the inner chimney the center of the screw locations near the top on both sides of the inner chimney. Carefully slide the inner (upper)chimney down.

NOTE:

For ductless (recirculating) installations, the venting holes near the top of the inner (upper) chimney should be exposed from the outer(lower) chimney to allow air recirculation.

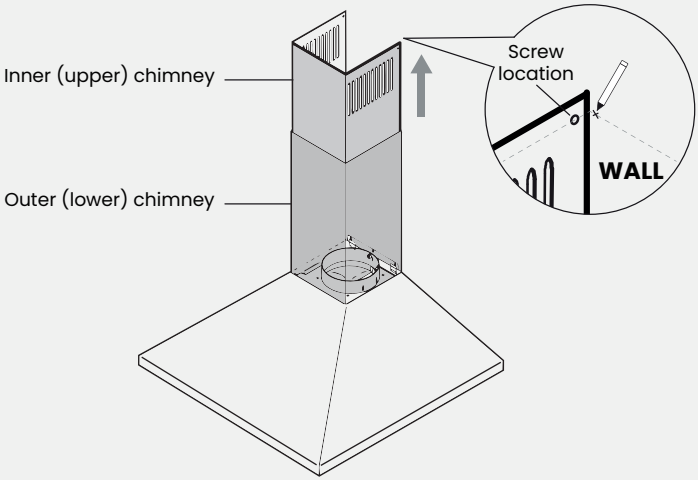

4. Align the center of the inner chimney support bracket with the centerlineon the wall, and align the screw hole on both sides of the support bracketwith the previously marked inner (upper) chimney screw locations on thewall. Make sure the support bracket is level, and mark the (2) mountingscrew locations.

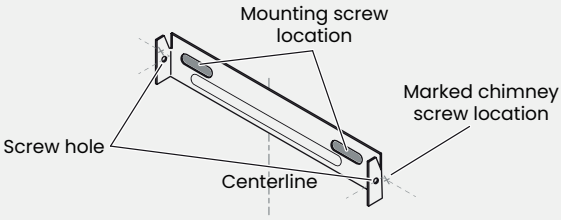

5. Position the outer chimney support bracket on the wall with the top of the outer chimney hooking onto the support bracket on both sides. Align the center of the support bracket with the centerline on the wall, and make-sure it is level. Mark the (2) mounting screw locations of the support bracket.

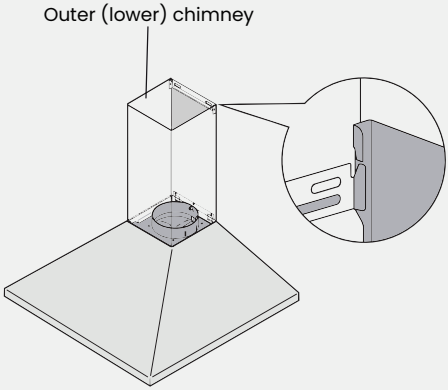

6. Rest chimneys and range hood on covered surface.
For wood, drill 5/32" (4mm) pilot holes at all locations where mounting screws are being installed into wood.
For wall anchors, drill 5/16" (8 mm) holes at all locations where wall anchors are being used.

7. Attach chimney support brackets to the wall with (2) mounting screws each.
For wood, install the 4 x 30 mm mounting screws.
For wall anchors, install the 8 x 35 mm wall anchors and install the 4 x 30 mm mounting screws into the wall anchors.

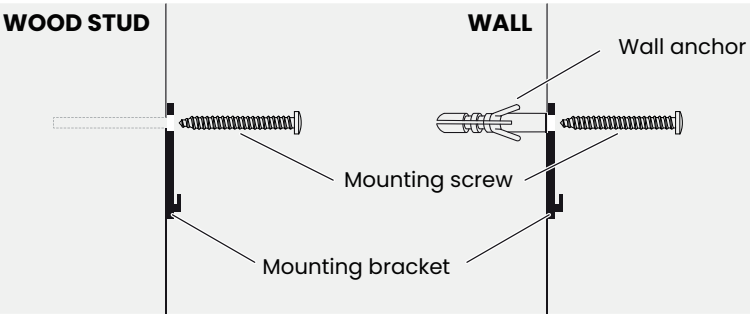

4.2 INSTALL RANGE HOOD

WARNING
HAZARD OF ELECTRICAL SHOCK!

- Disconnect power before servicing.
- Replace all parts and panels before operating.
- Plug into a grounded 3-prong outlet.
- Failure to do so can result in death, fire, or electrical shock

EXCESSIVE WEIGHT HAZARD

- Use two or more people to move and install range hood.
- Failure to do so can result in back or other injury.

1. Using 2 or more people, hang range hood on mounting bracket through the mounting slots on back of range hood.

2. Check and verify the round damper is properly installed into the duct opening of the range hood.

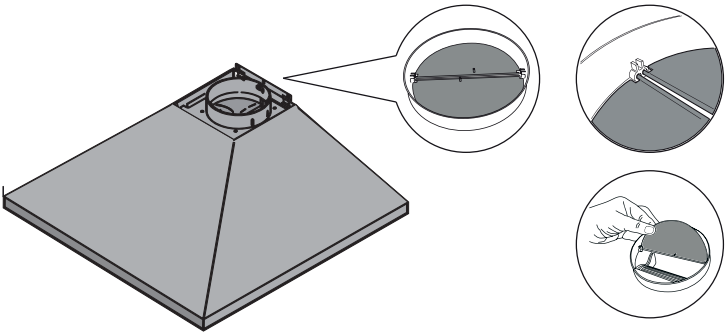

3. **For ducted installations only:** Connect one end of 6" round aluminum duct to the top duct opening of the range hood, and the other end to the existing duct system. Seal connections with clamps or HVAC foil tape (notincluded).

4. Plug range hood into a grounded 3-prong outlet.

5. Place both inner (upper) and outer (lower) chimneys onto hood, and hang outer chimney onto the lower support bracket on the wall. The innerchimney must slide into the outer chimney.

NOTE:
To help prevent scratches, lay paper or a kitchen towel over the top edges of the outer (lower) chimney to protect the surface.

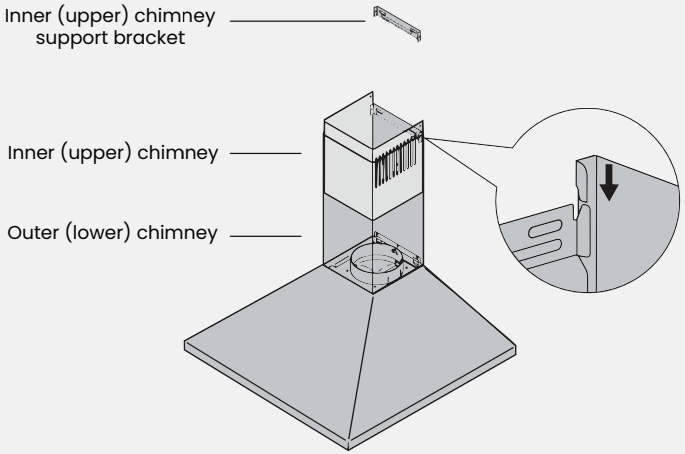

6. Lift inner (upper) chimney to upper support bracket on the wall, install with (2) 3 x 10 mm screws on both sides of the chimney, or hang chimneyonto the support bracket.

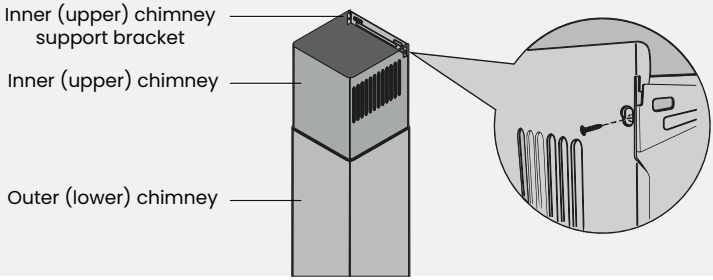

7. (Optional) For models with screw holes on the range hood aligning with the screw holes on both sides of the outer (lower) chimney at the bottom,install (2) 3 x 10 mm screws.

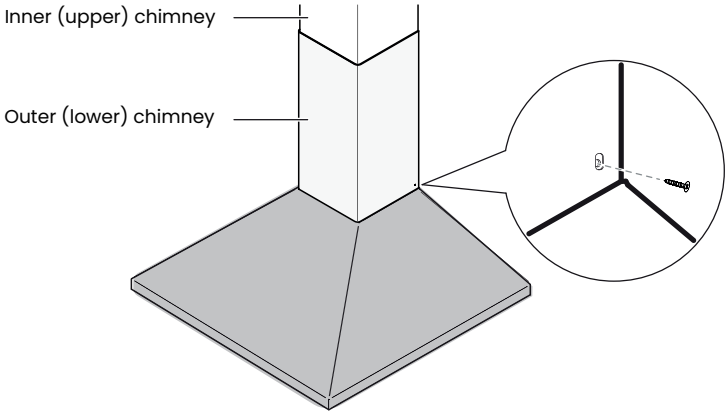

HOW TOREPLACE ORCHANGE CHARCOAL FILTERS

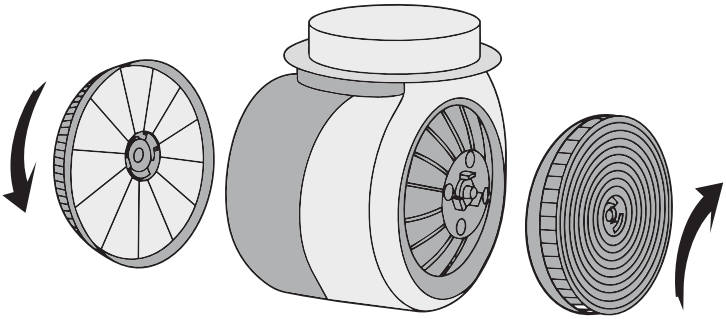

Scan for a charcoal filter installation tutorial video.

4.3 INSTALLATION OPTIONS

1 BOTTOM VIEW

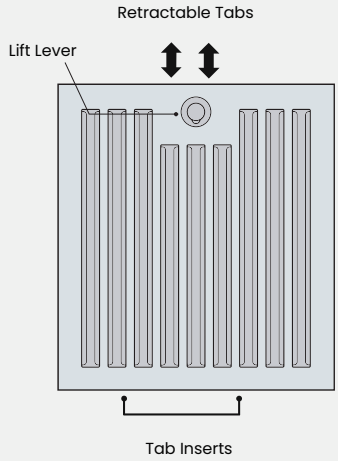

*** Before installing, remove the protective white film ***

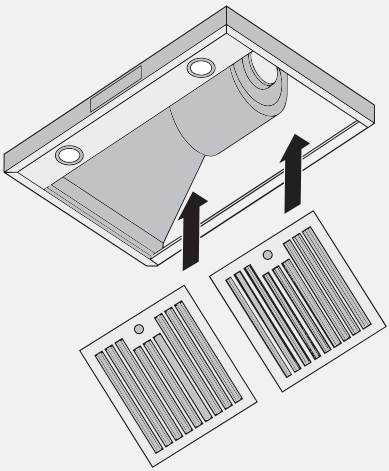

Baffle Filters

2 SIDE VIEW

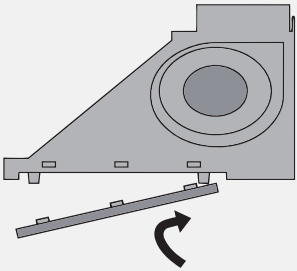

1.Angle the filter and direct the tab inserts toward the range hood opening.

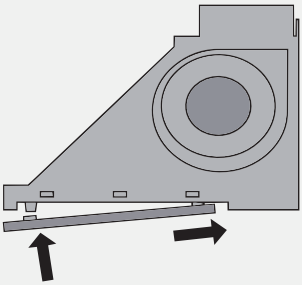

2. While continuing to install the filter, lift the lever so the retractable tabs clear the way for flush insertion.

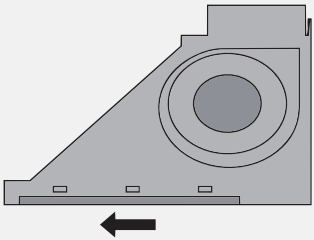

3.When the filter sits flush within the opening, release the lever to lock it in place.

CLEANING & MAINTENANCE 05

5.1 SAFE OPERATING PRACTICES

1. Read and understand all instructions and warnings in this manual before operating the appliance. Save these instructions for future reference.
2. Always keep safety grills and filters in place; fans could catch hair, fingers, or loose clothing without these safety components.
3. Never dispose of cigarette ash, ignitable substances or any other foreign objects in the fans.
4. Never leave the stove top unattended; when frying, oil can overheat and catch fire. The risk of combustion is higher when the oil has been used several times.
5. Never cook on "open" flames under the range hood. Check deep-fryers during use; superheated oil may be flammable.
6. Grease buildup on the blower and filters increases flammability. Keep the range hood clean to prevent possible fires.
7. Filters must be cleaned periodically and kept free from accumulation of cooking residue.
8. Old and worn filters must be replaced immediately.
9. **DO NOT operate the fans without the filters. Never disassemble parts for cleaning without proper instructions. Disassembly should be performed by qualified personnel only. Read and understand all instructions and warnings within this manual before proceeding.**
10. **SAFETY WARNING: Never put your hand into the area housing the fan while it is operating!**

5.2 CLEANING THE EXTERNAL SURFACES

1. Clean periodically with stainless steel cleaner and a clean cotton cloth. Do not use corrosive or abrasive detergents (e.g. Comet Power Scrub®, EZ-Off® oven cleaner, etc.), or steel wool/scouring pads, which will scratch and damage the stainless steel surface. For heavier oil, use a liquid degreaser such as "Formula 409®" or "Fantastic®".
2. If the stainless steel hood has grease spots, use a stainless steel cleaner to clean its surface. Avoid getting cleaning solutions on or inside the control panel. Follow the instructions provided with the stainless steel cleaner. CAUTION: Do not leave the cleaner on too long, as this may damage the hood's finish. Use a soft towel to wipe off the cleaner, gently rubbing any stubborn spots. Then dry the hood with a soft, dry towel.
3. After cleaning, you may use a non-abrasive stainless steel polish such as 3M® or ZEP® to restore the stainless steel's luster and grain. Always rub lightly with a clean cotton cloth, following the grain direction.
4. DO NOT allow deposits to accumulate or remain on the hood.
5. DO NOT use ordinary steel wool or steel brushes to clean the range hood, as small steel particles may stick to the surface and cause rusting.
6. DO NOT allow salt solutions, disinfectants, bleaches, or cleaning compounds to remain in contact with stainless steel for extended periods. Many of these compounds contain chemicals that may be harmful. Rinse with water after exposure and wipe dry with a clean cloth.

Cleaning Grease Filter:

1. Clean the filters once a month.
2. **Baffle filters are dishwasher-safe.** If the filters are very dirty, spray them with “Formula 409 (R)” or an equivalent decreasing detergent, then allow them to soak. Dry the filters thoroughly before reinstalling and using the hood.

Replacing the Filters:

- If the filters wear out due to age or prolonged use, please contact Vikio's customer service to order new ones.

Replacing the light bulb:

- This range hood uses LED bulbs (please refer to the specific model purchased for exact specifications). For USA/Canada, the following bulb type is used: LED 3W, 120V.

5.3 CONTROL PANEL REPLACEMENT

⚠ WARNING

Never work on or clean the range hood while the power is on. Always unplug the unit or switch the electrical breaker to the off position.

How to Replace the Control Panel:

1. Make sure the range hood is unplugged or turn OFF breaker.
2. Remove the baffle filters.
3. Remove the screws on the LED Light panel.
4. Remove the screws holding the control panel.
   Unplug the control panel, and replace with a new control panel.
5. Fix the screws holding the control panel.
6. Fix the screws of LED Light panel.

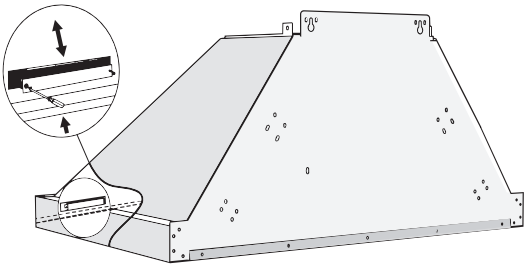

WIRING DIAGRAM (Digital Panel)

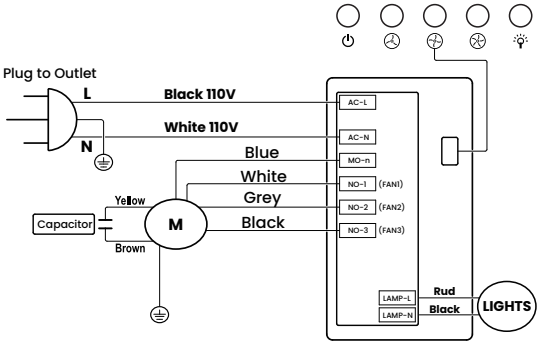

Scan for a button panel installation tutorial video.

5.4 CIRCUIT BOARD REPLACEMENT

⚠ WARNING

Never work on or clean the range hood while the power is on. Always unplug the unit or switch the electrical breaker to the off position.

How to Replace the Circuit Board:

1. Make sure the range hood is unplugged or turn OFF breaker.
2. Remove the baffle filters.
3. Remove the screws on the circuit board box.
4. Take out the circuit board and unplug the wires connected to the circuit board one by one.
5. Replace the circuit board, plug the wires one by one, and then secure the circuit board with screws.
6. Put the wires back to the board box, fix the screws, cover the panel and secure it with screws.

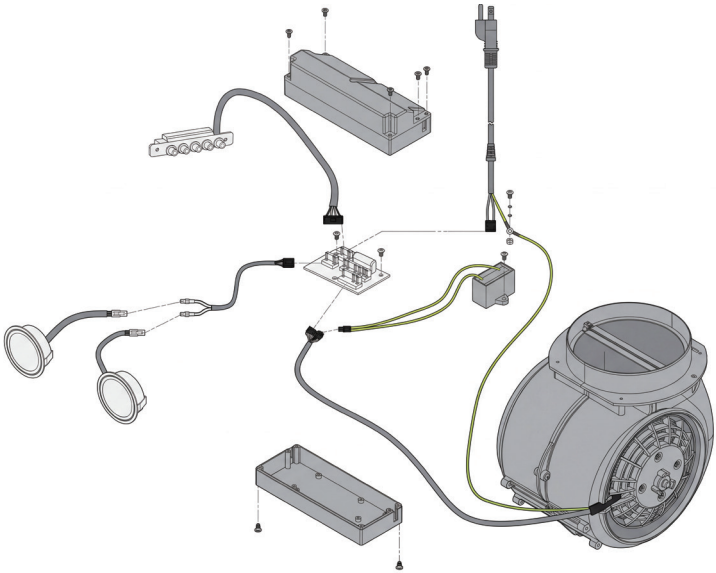

Scan for a circuit board installation tutorial video

5.5 LIGHT BULB REPLACEMENT

Turn off the range hood and allow the LED Lights to cool. Replace the LED lights using tissue or wearing cotton gloves to handle them.

1. Disconnect power.
2. Remove the metal filters. See "Metal Grease Filter" in the "RANGE HOOD CARE" section.
3. Disconnect the LED light cable from the range hood.

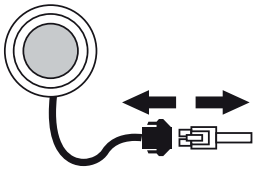

4. Use a flat-blade screw driver to gently pry and remove the LED light.
5. Install a replacement LED light. Be sure to properly align the LED light withthe opening and the LED light is securely locked into place.
6. Connect the LED light cable to the range hood.

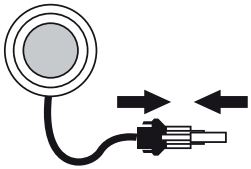

7. Reinstall the metal filters into the range hood.
8. Reconnect power.

Scan for a light bulb installation tutorial video

TROUBLESHOOTING

06

EXPLODED-VIEW DIAGRAM

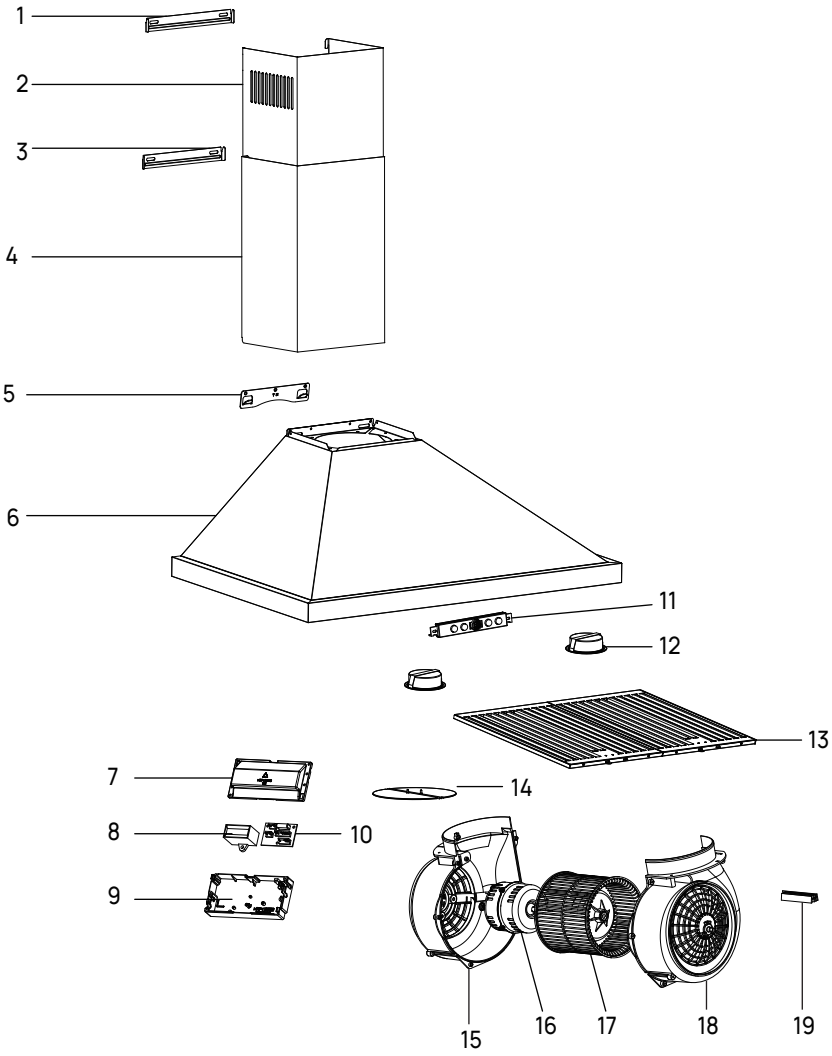

NO.	DESCRIPTION	QUANTITY
1	Upper Chimney Mounting Bracket	1
2	Upper Chimney	1
3	Lower Chimney Mounting Bracket	1
4	Lower Chimney	1
5	Hanger	1
6	Hood Body	1
7	PCB Box Cover	1
8	Capacitor	1
9	PCB Box Fixer	1
10	PCB	1
11	Push Button Assembly	1
12	LED Light	2
13	Baffle Filter	2(24 "/ 30")/3(36")
14	Damper	2
15	Left Housing	1
16	Motor	1
17	Fan	1
18	Right Housing	1
19	Clip	1

6.1 TROUBLESHOOTING

ISSUE	POSSIBLE REASONS	SOLUTION
The blower or fan seems weak.	A large amount of oil has accumulated on the baffle filter.	Clean or replace the baffle filters.
	The wrong duct size was used.	Use the right duct size: 3-1/4" x 9-3/4" or 6" round type.
	The distance between the range hood and the stove is too far.	Adjust the distance between the range hood and the stove top.
	The duct is clogged, or the damper unit (half-circular flapper) is not installed correctly.	Clear the blockage of the duct. Install the flapper correctly.
The range hood is not functioning.	There is no power to the range hood.	The most common issue is that the circuit breaker is off or the fuse has blown.
		Make sure a speed has been selected at the controls.
		Turn off the power and check that all wires are properly connected. Refer to your specific model's installation instructions for proper wiring.
The range hood is making a rattling noise.	The motor is loose.	Turn off the power, remove the filter, and check that all screws are secure and tight around the motor.
	The ductwork connection is loose.	Tighten the ductwork connection to the pipe. Add duct tape if necessary.
	The hood is not secured in place.	Check the installation of the hood to make sure it is installed correctly.
	The motor or damper may be stuck.	Check whether the air outlet is blocked by foreign matter or deformation of the air duct, and whether the damper opens freely.
The motor is working, but the light is not on.	The light connector is not connected.	Check whether the LED connector is connected.
	The light is out of order.	Contact customer service to replace the light.
	The circuit or switch board is out of order.	Contact customer service to replace the switch board or circuit board.
The lights cannot be turned off.	The circuit board is out of order.	Contact customer service to replace the circuit board.

WARRANTY & SUPPORT 07

TO OBTAIN SERVICE UNDER WARRANTY:

You must present proof of the original purchase date. Please provide an original, dated proof of purchase (sales receipt/invoice) to obtain service under warranty.

Two-year Parts Warranty

For two years from the date of original purchase, Vikio will provide free replacement parts or components that fail due to manufacturing defects, excluding consumable items. Subject to the conditions and limitations below, Vikio will replace any product part found defective due to improper workmanship or materials. Replacement parts or products will be provided on an exchange basis and may be new or refurbished to be functionally equivalent to being new.

Who Is Covered

This warranty is extended to the original purchaser for products purchased for ordinary home use.

This Warranty Will Be Voided When

This warranty does not cover damage caused by negligence, improper installation, accidents, abuse, misuse, natural disasters, insufficient or excessive electrical supply, abnormal mechanical or environmental conditions, unauthorized disassembly, repair, modification, or failure to follow installation instructions. It is also void if the product is used commercially or for purposes other than its intended use, improperly connected to equipment from other manufacturers, or repaired or modified by anyone other than Vikio. Additionally, this limited warranty does not apply if the original identification information has been altered, removed, or obliterated, if the product has not been handled or packaged correctly, or if it has been sold second-hand.

What Is Not Covered

This warranty does not cover consumable parts such as light bulbs, metal and charcoal filters, or natural wear of finishes. Damage caused by improper maintenance, use of corrosive or abrasive cleaning products (including pads and oven cleaners), or physical damage such as chips, dents, or cracks due to abuse, misuse, freight damage, or improper installation is excluded. Damage caused by accidents, fire, floods, or acts of God is not covered. Vikio and its distributors/resellers are not liable for any property loss or costs related to removing, servicing, installing, or diagnosing problems with this product. This warranty is valid only in Canada and the United States and is non-transferable, applying solely to the original purchaser. It does not extend to subsequent owners. Any implied warranties, including merchantability, are limited to the duration of the express warranty starting from the original purchase date. No warranties apply beyond this period. To obtain warranty service, contact Vikio with the product identification (model number/name), a detailed description of the issue, and proof of the original purchase date. This documentation confirms the product's warranty eligibility and authenticity.

**Subject to change without notice. Contact Vikio Home for the latest details.*

7.2 DISCLAIMER

Carefully inspect all items for damages before accepting delivery. Note any damages on the freight bill or express receipt, request the name and signature of the carrier's agent, and keep a copy to support your claim. Upon acceptance of items, the owner assumes responsibility for their safe arrival. Report damages to the carrier and file a claim immediately. Failure to do so may result in the denial of your claim. The carrier will furnish you with the necessary forms for filing a claim.

Damages on any returns or exchanges caused during transit are not covered under our warranty (the customer must insure the return with the shipping company).If your range hood is damaged in transit, please contact Vikio Home within fourteen (14) days to report the issue. Vikio Home will assist in filing a damage claim and investigating.

Please inspect the contents of the package(s) carefully upon receiving! Vikio Home must be notified of any damages and/or missing parts within fourteen (14) days of your receipt of the package(s). Claims will not be accepted after fourteen (14) days.

NOTE: All items are thoroughly tested and carefullly packed in Vikio Home's facility before shipping.

Products must be returned in good working condition with ALL original parts and documentation, packed in all original cartons, fillers, and shipping cartons. A restocking fee of 10% will be charged for all approved returns. Exchanges or returns will not be accepted if the unit has been installed, and may be rejected if parts are missing.

Make sure to inspect the hood for damages and defects before installation. Appearance flaws of the hood found after installation that do not affect hood performance are not covered under our warranty for returns or exchanges. Service visits are not covered under warranty and will carry a service charge.

7.3 FAQ

Q1. Can my hood be ductless?

YES — It's better to have a duct leading outside, but if this isn't possible, then a ductless recirculating setup is acceptable.

Q2. Is the width in my range hood's description the actual size?

No - the actual width of the range hood will be slightly less than the generic description of the range hood in order to better fit cabinet cutions.

Q3. Why is my range hood covered with a white/blue film?

This is a protective layer applied to all range hoods to prevent damage during shipping.

Q4. How do I clean my baffle filters and how often?

Your baffle filters should be cleaned once a month with hot water and soap, or placed in a dishwasher. Ensure they are completely dry before reinstalling.

Q5. Can I clean my charcoal filter?

No - charcoal odor filters can't be washed and must be discarded and replaced before they become noticeably dirty and/ or if they can no longer filter odors. They should be replaced every 3-6 months.

CONTACT US

If you require assistance, please contact Vikio. Have your order number and range hood model ready, as this information is necessary to process your request.

For replacement parts, it is strongly recommended to use only genuine Vikio parts, since Vikio's accessories and parts are specifically engineered and designed for VIKIO HOME range hoods.

Each part undergoes rigorous testing to ensure maximum durability and reliability, offering a perfect factory match in appearance and functionality tailored to your specific model.

www.vikiohome.com

info@vikiohome.com

1-888-213-4550 1-888-214-0999

Intertek