

QUICKFIT:Tighten quickfit until shoulder is flush with panel. Do not overtighten or undertighten.

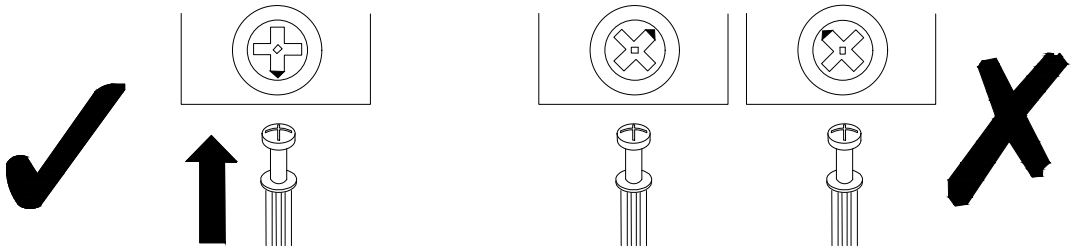

LOCK:When fitting cam lock,ensure starting position is correct before you insert connecting quickfit.

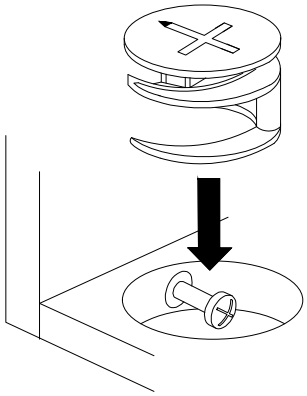

Quickfit head should be in the centre of the cam lock when the two panels are joined. Cam lock should be inserted before quickfit.

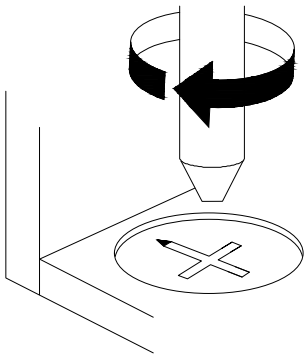

Turn cam lock clockwise to tighten.

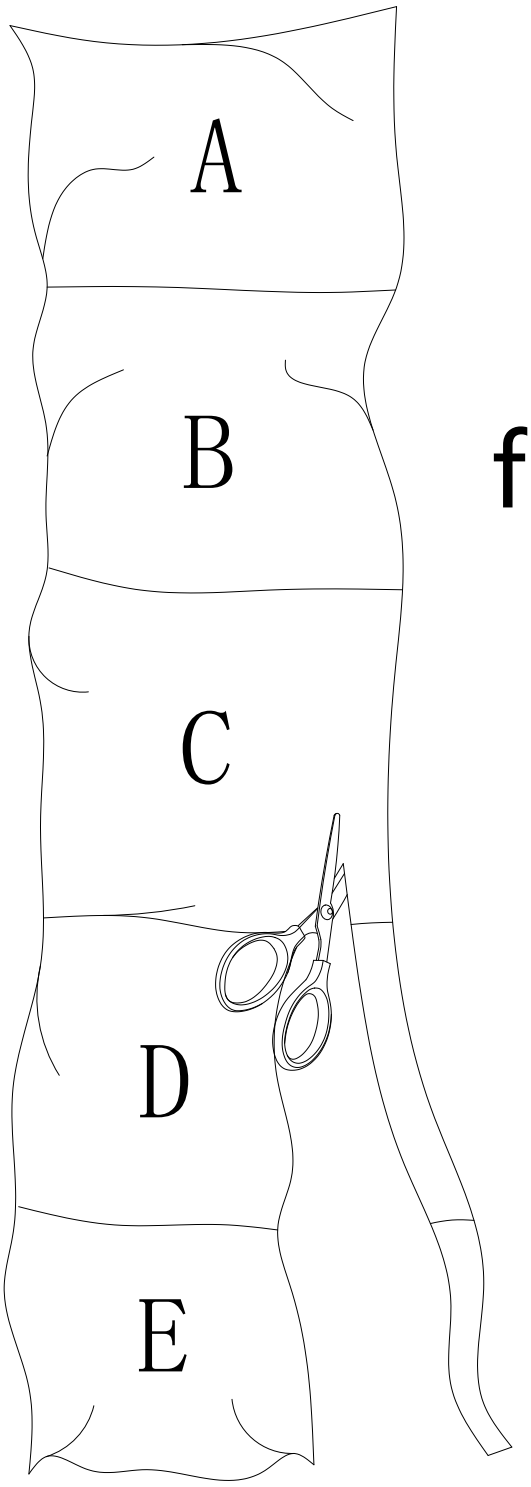

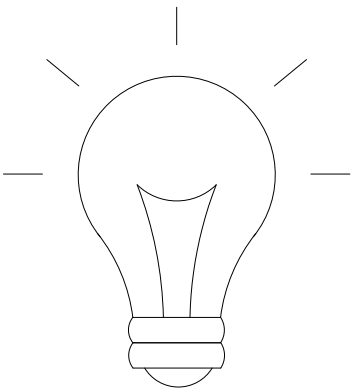

friendly reminder

To avoid errors and confusion during the installation of accessories, use the type and quantity of hardware accessories according to the installation procedure described in the instructions. First, unroll the accessories bag and lay out the hardware accessories, cut holes in the side, and take out the hardware accessories

Assembly Instructions

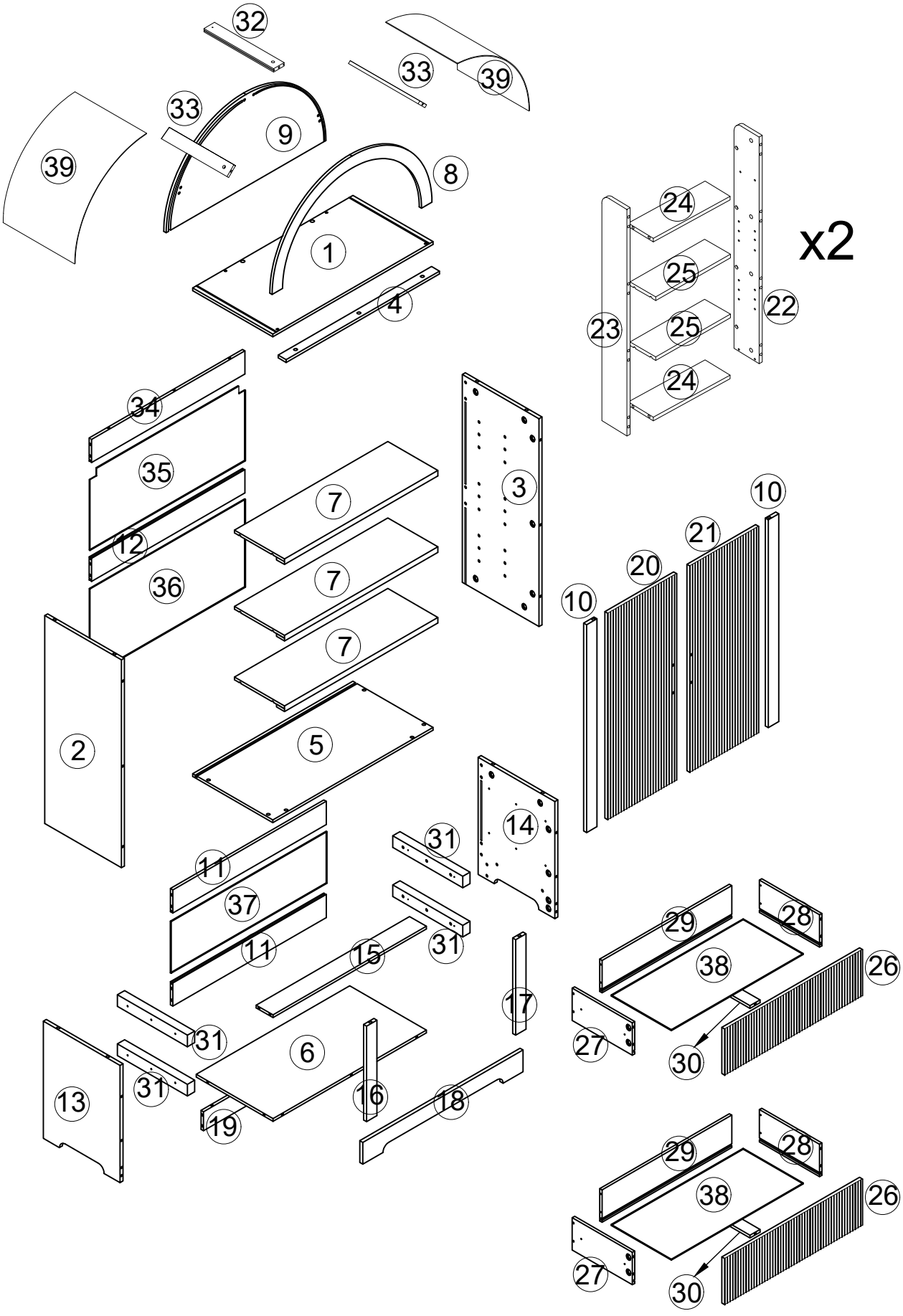

Psrts List BOX:1/2

NO.	PARTS	QTY
⑪	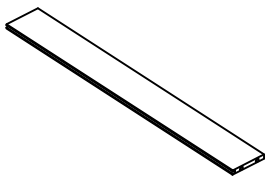	×2
NO.	PARTS	QTY
⑫	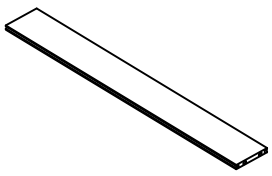	×1
NO.	PARTS	QTY
⑬	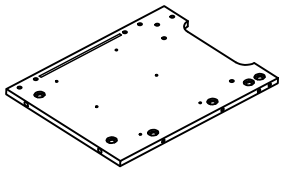	×1
NO.	PARTS	QTY
⑭	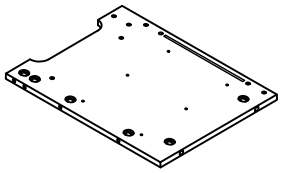	×1
NO.	PARTS	QTY
⑯	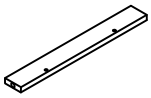	×1
NO.	PARTS	QTY
⑰	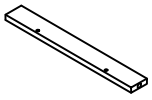	×1
NO.	PARTS	QTY
㉔	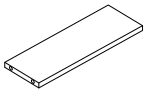	×4

NO.	PARTS	QTY
㉕	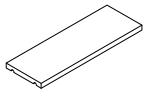	×4
NO.	PARTS	QTY
㉖	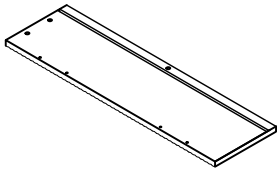	×2
NO.	PARTS	QTY
㉗	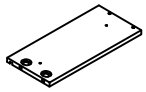	×2
NO.	PARTS	QTY
㉘	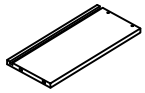	×2
NO.	PARTS	QTY
㉙		×2
NO.	PARTS	QTY
㉚	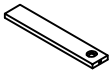	×2
NO.	PARTS	QTY
㉛	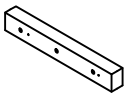	×4

Psrts List BOX:1/2

NO.	PARTS	QTY
㉜	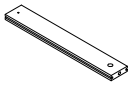	×1

NO.	PARTS	QTY
㉝	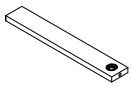	×2

NO.	PARTS	QTY
㉞	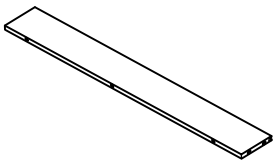	×1

NO.	PARTS	QTY
㊴	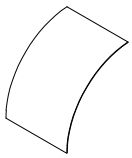	×2

Psrts List BOX:2/2

NO.	PARTS	QTY
①	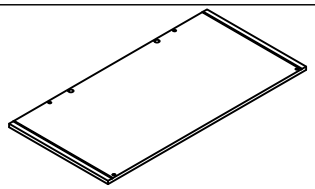	×1
NO.	PARTS	QTY
②	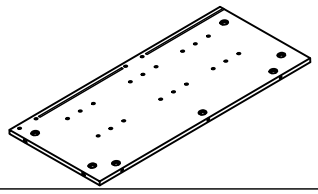	×1
NO.	PARTS	QTY
③	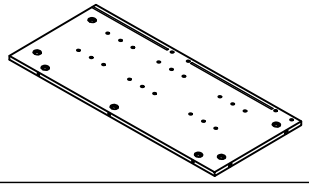	×1
NO.	PARTS	QTY
④	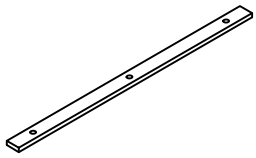	×1
NO.	PARTS	QTY
⑤	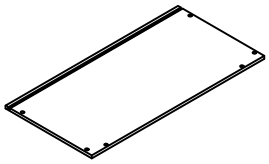	×1
NO.	PARTS	QTY
⑥	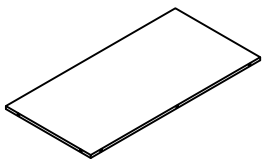	×1
NO.	PARTS	QTY
⑦	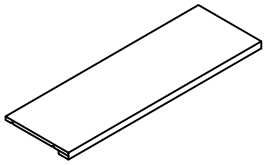	×3

NO.	PARTS	QTY
⑧	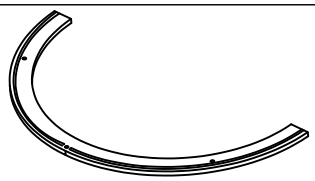	×1
NO.	PARTS	QTY
⑨	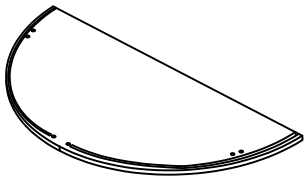	×1
NO.	PARTS	QTY
⑩	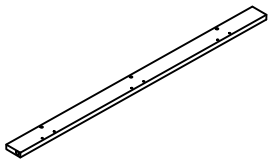	×2
NO.	PARTS	QTY
⑮	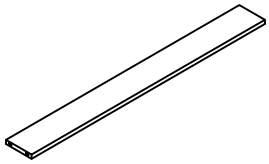	×1
NO.	PARTS	QTY
⑱	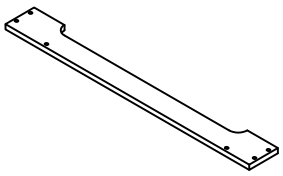	×1
NO.	PARTS	QTY
⑲	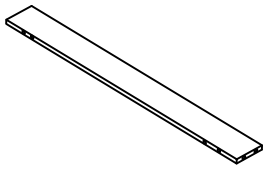	×1
NO.	PARTS	QTY
⑳	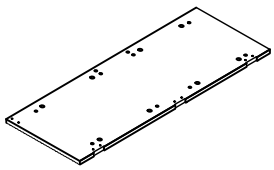	×1

Psrts List BOX:2/2

NO.	PARTS	QTY
㉑	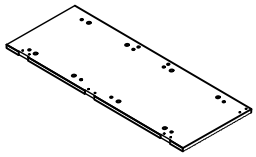	×1

NO.	PARTS	QTY
㉒	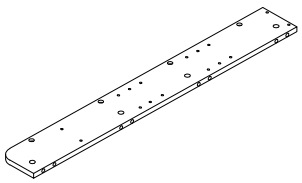	×2

NO.	PARTS	QTY
㉓	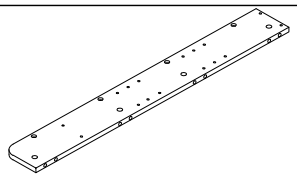	×2

NO.	PARTS	QTY
㉟	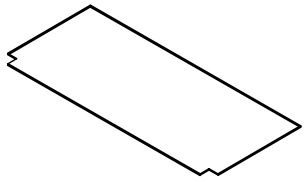	×1

NO.	PARTS	QTY
㊱	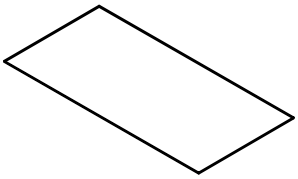	×1

NO.	PARTS	QTY
㊲	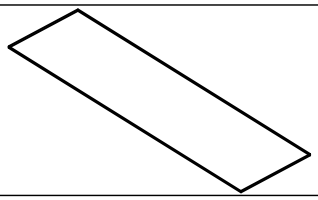	×1

NO.	PARTS	QTY
㊳	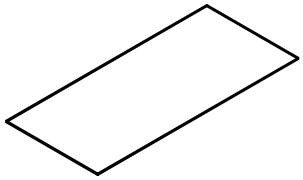	×2

Parts list/Teileliste/Liste des pieces

A 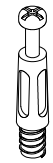 ST x105	B  φ15 x105	C  φ8 x34	D  M3*16mm x4
E  M3*12mm x58	F 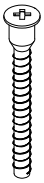 M5*40mm x20	G  x8	H  x28
J 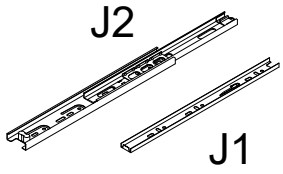 x4	K 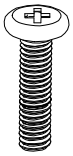 M6*16mm x3	L 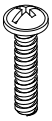 M4*28mm x4	M  x2
N 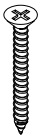 M3.5*35mm x12	P 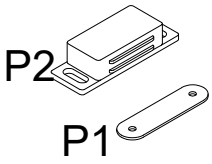 x2	Q 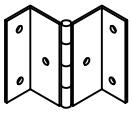 x6	R 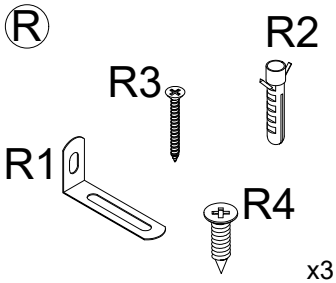 x3
T  x6	U  x4	V 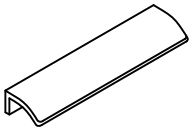 x4	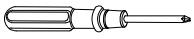

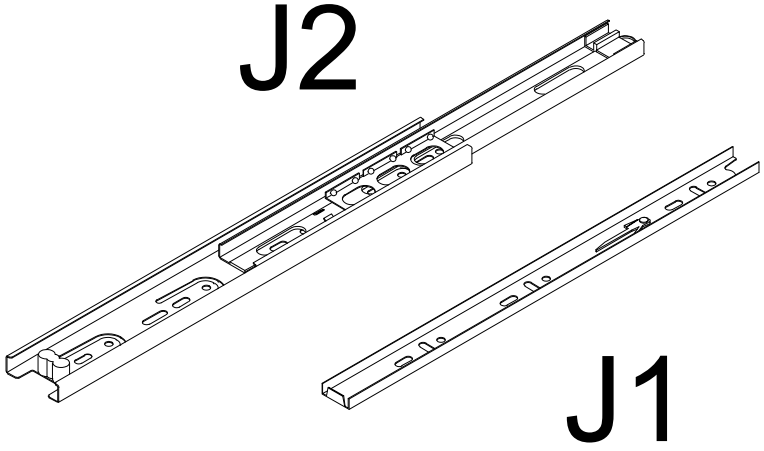

1

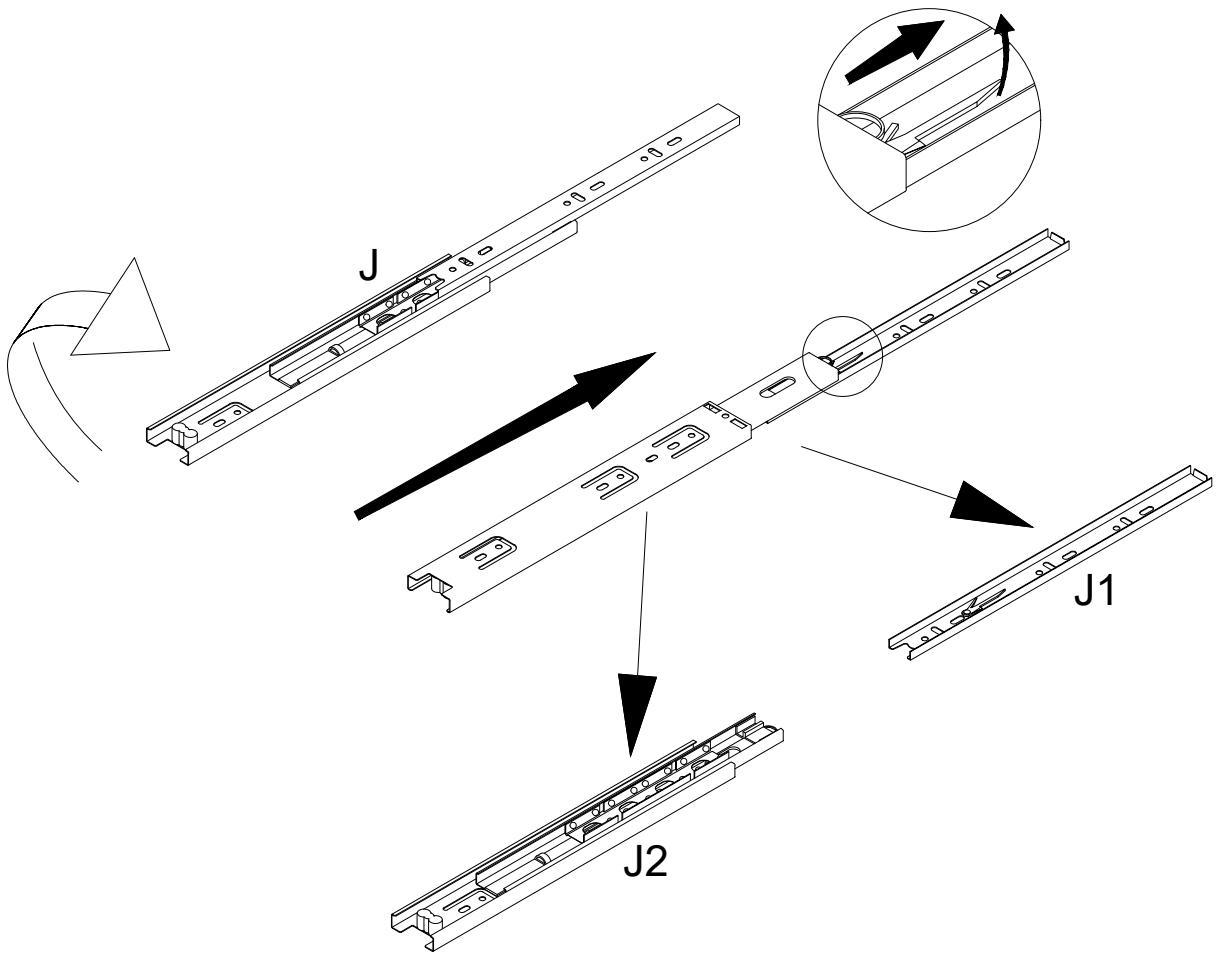

2

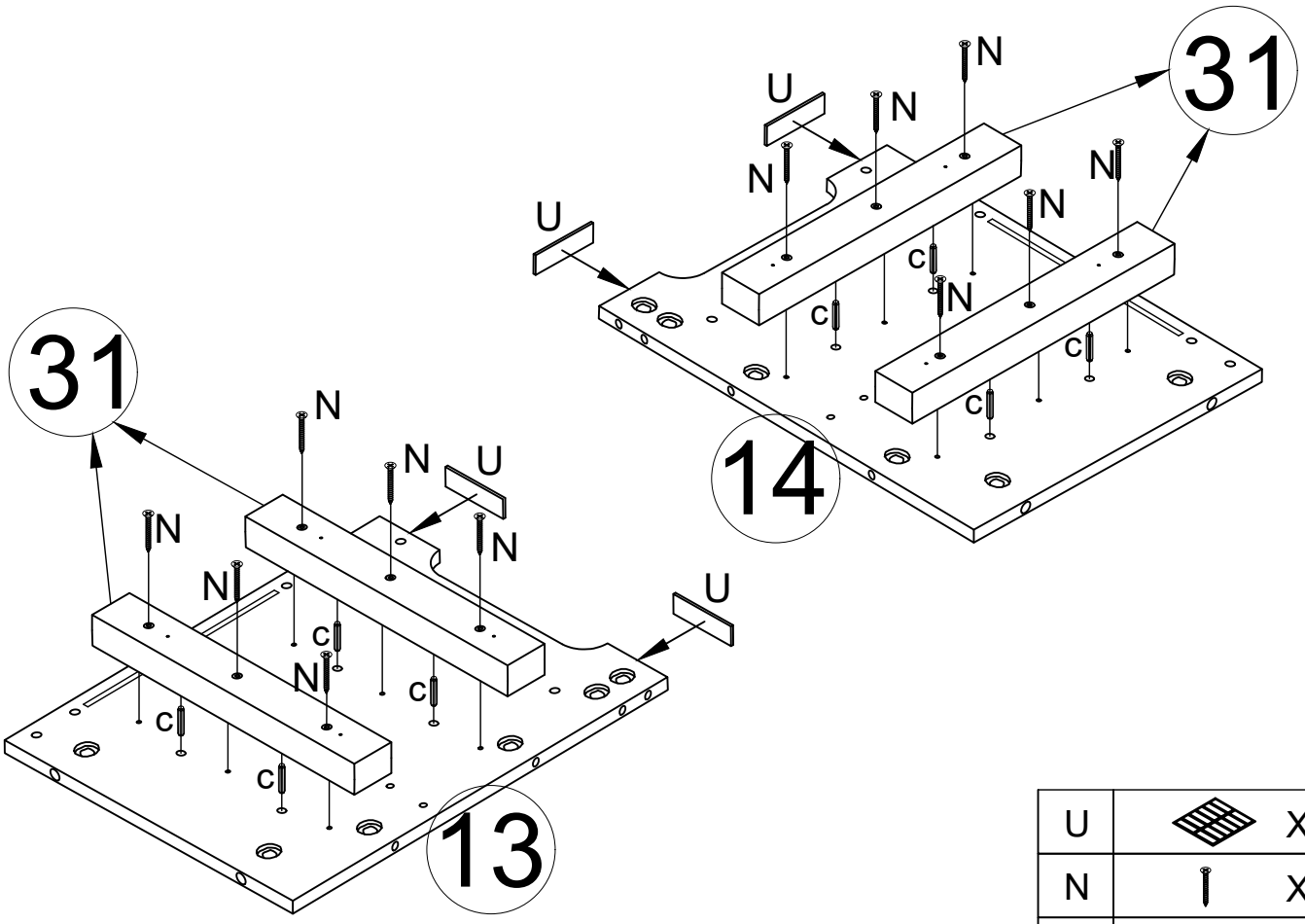

U		X 4
N		X 12
C		X 8

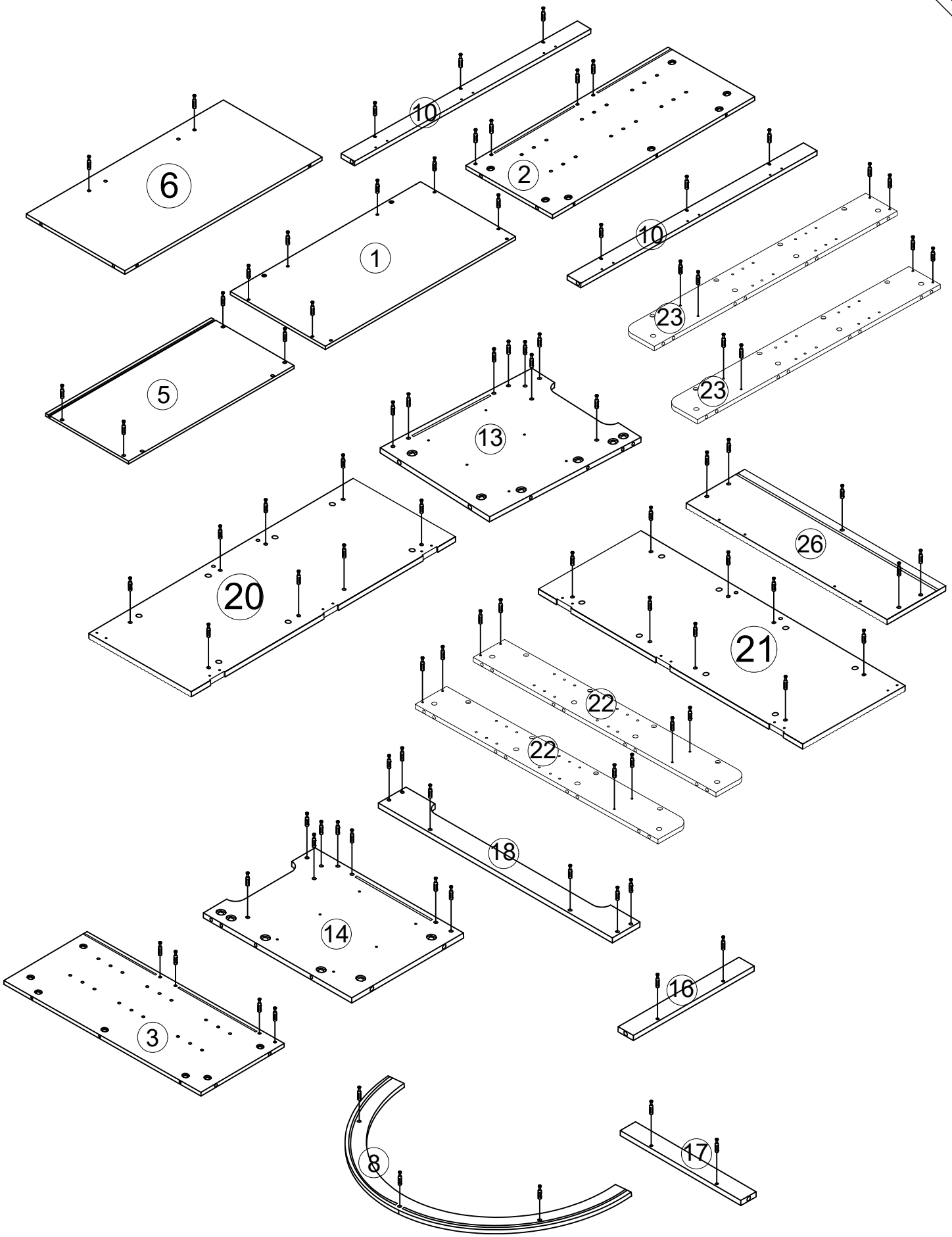

A	X 105

4

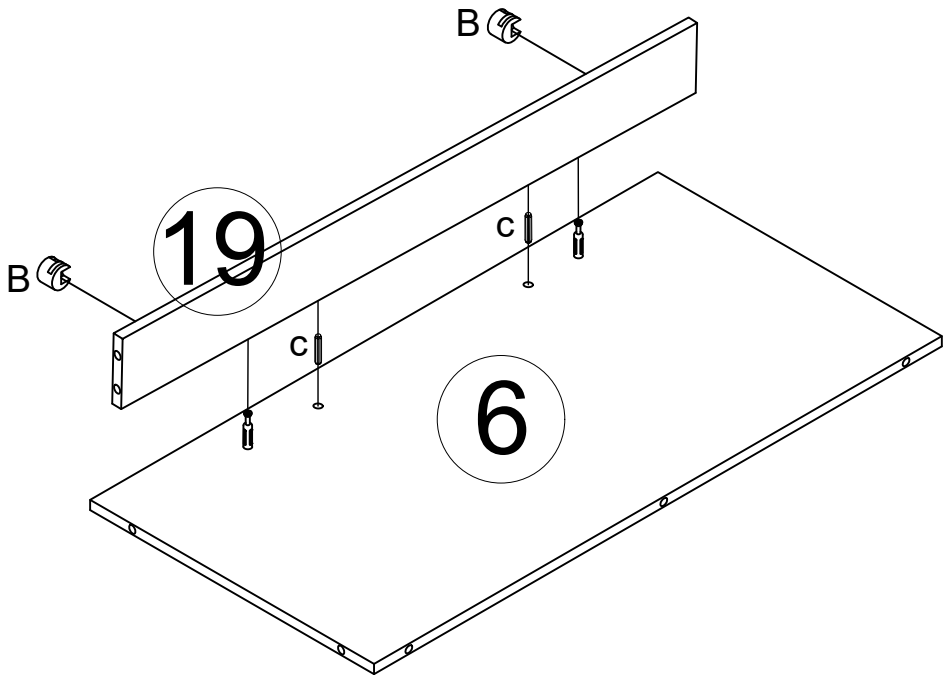

B		X 2
C		X 2

5

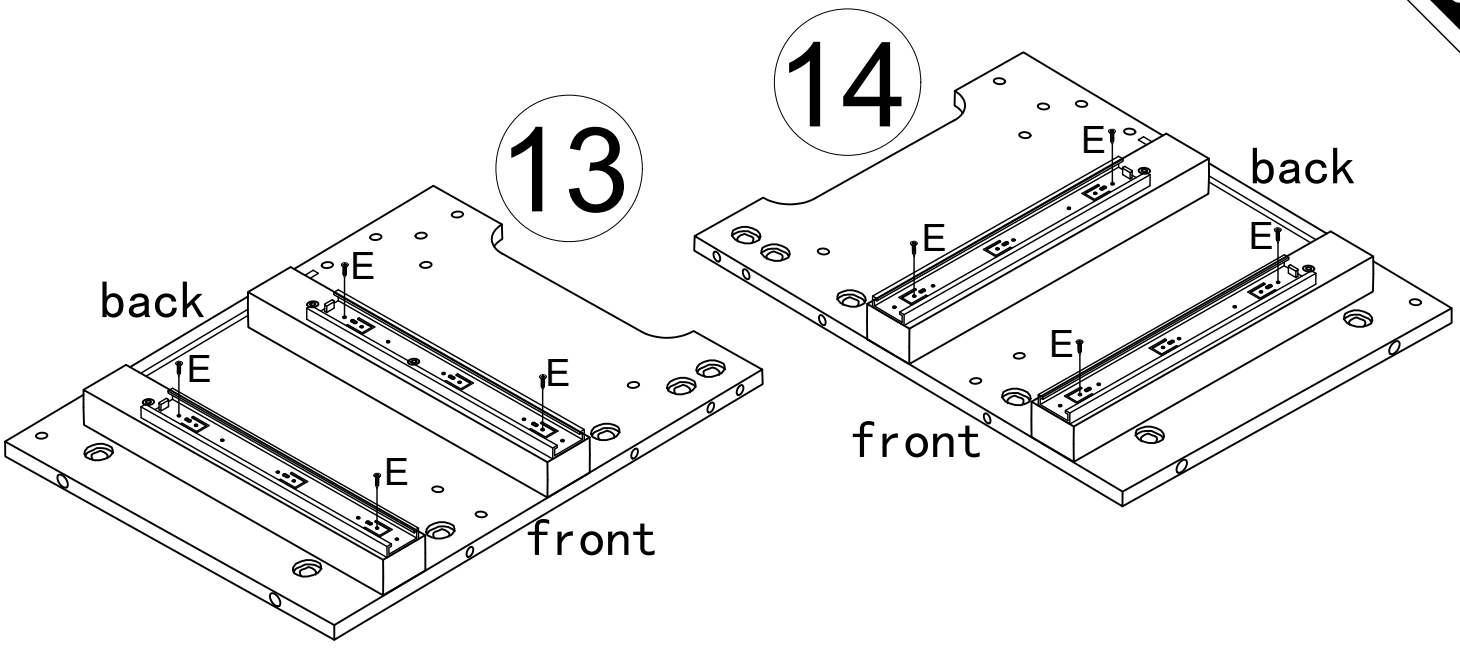

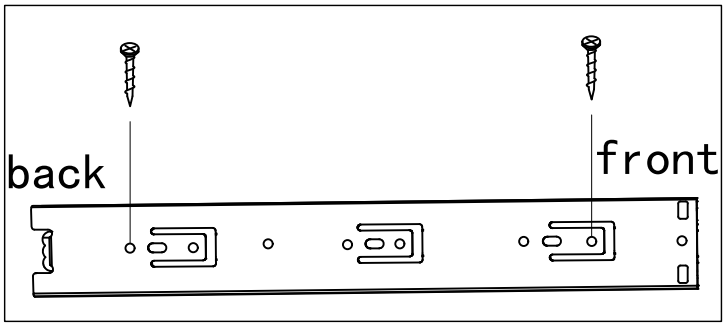

E		X 8
J2		X 4

6

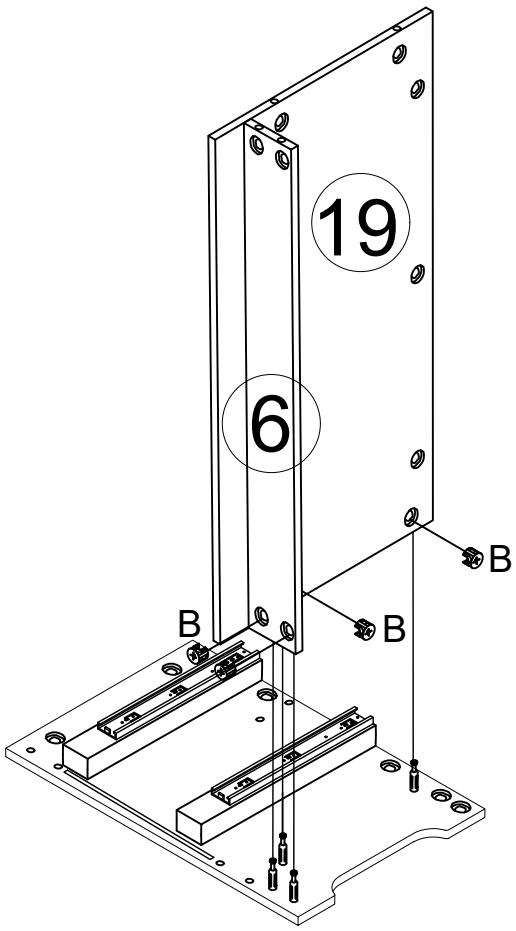

B	X 3

7

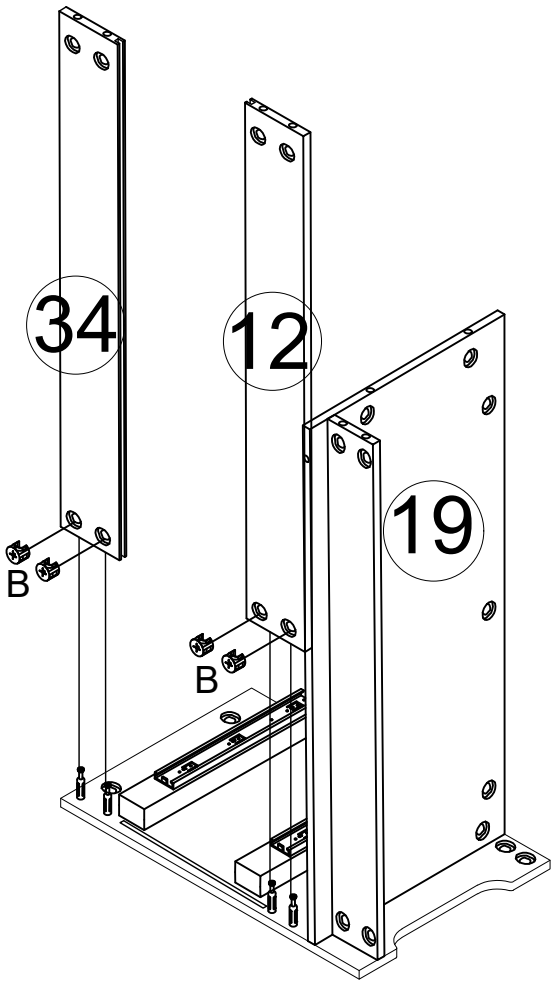

B	X 4

8

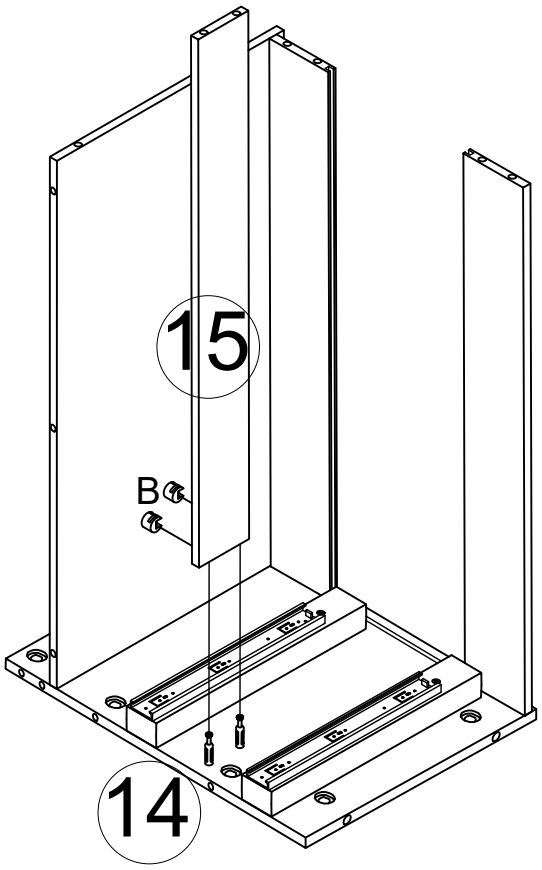

B		X 2

9

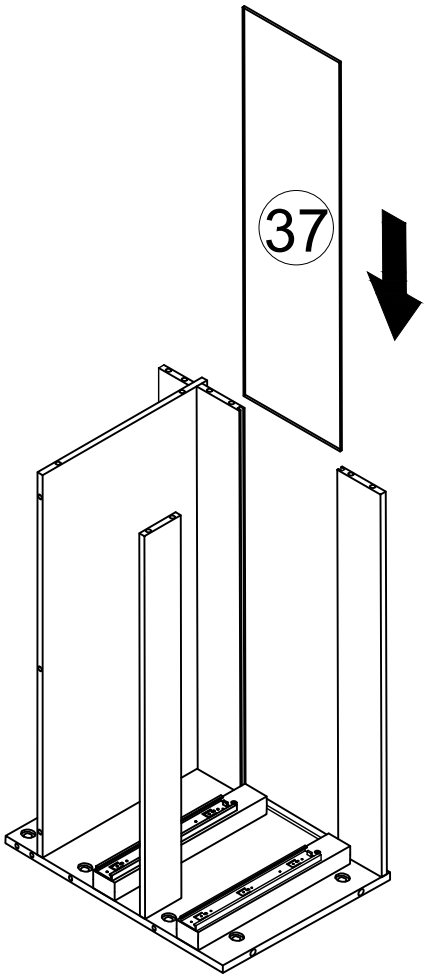

10

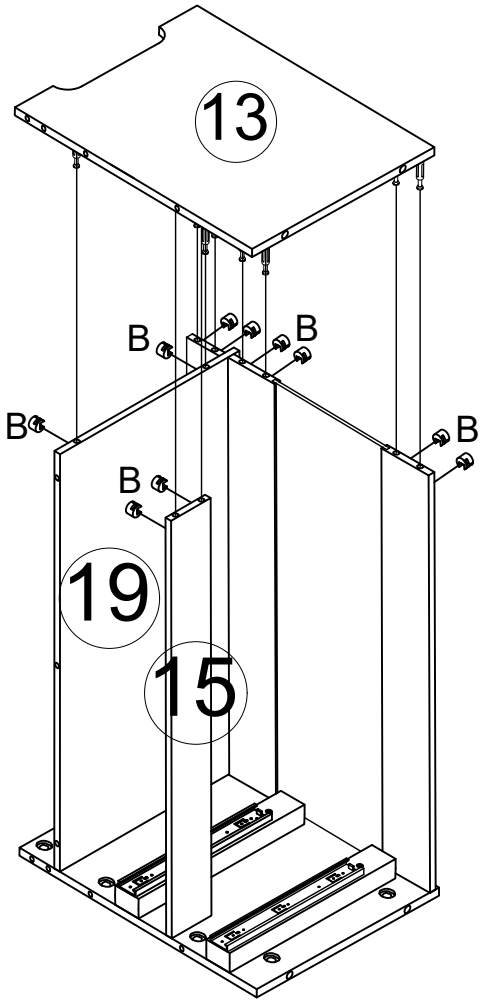

B	X 10

11

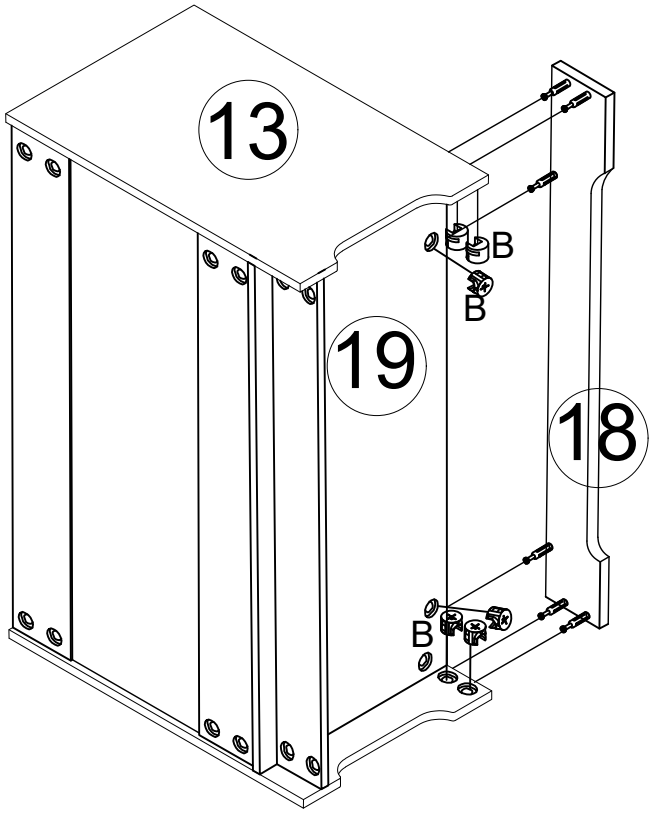

B	X 6

12

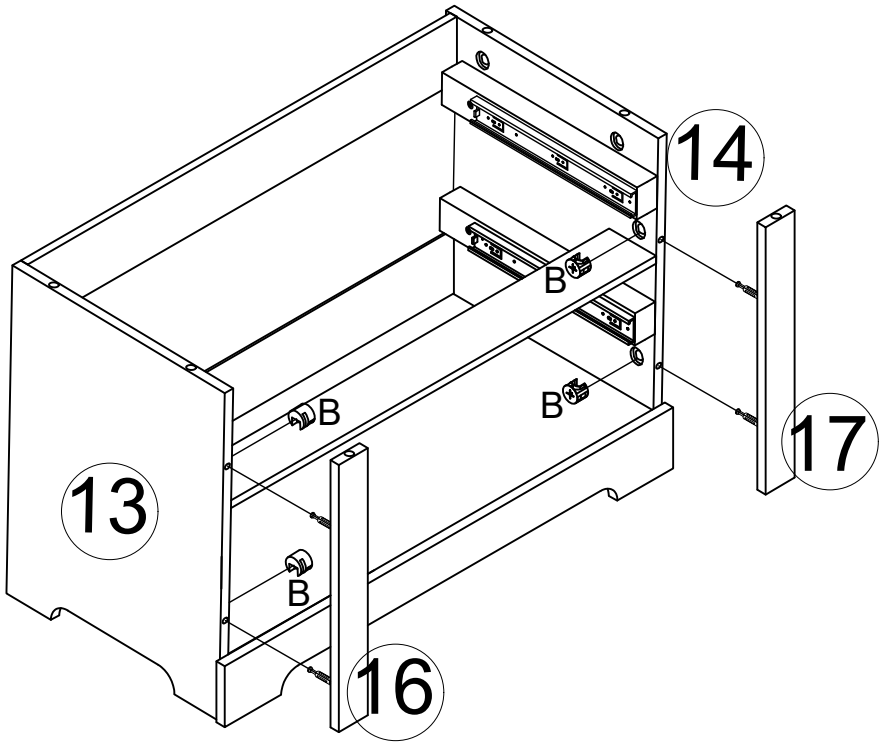

B	X 4

13

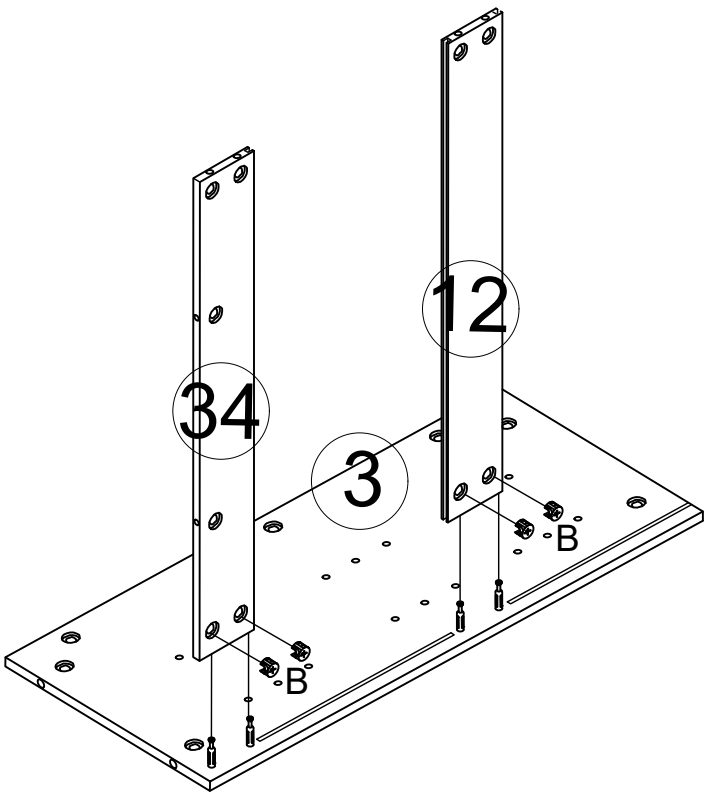

B	X 4

14

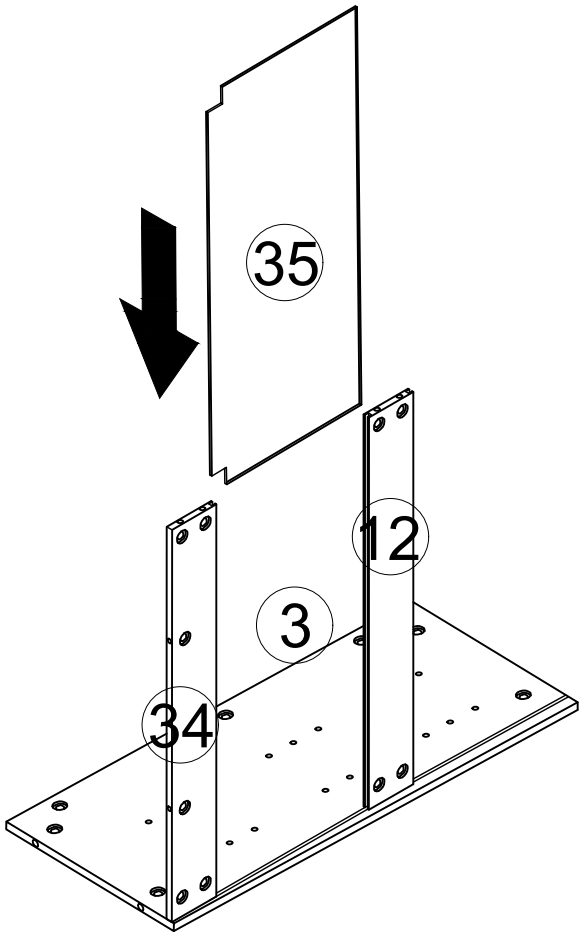

15

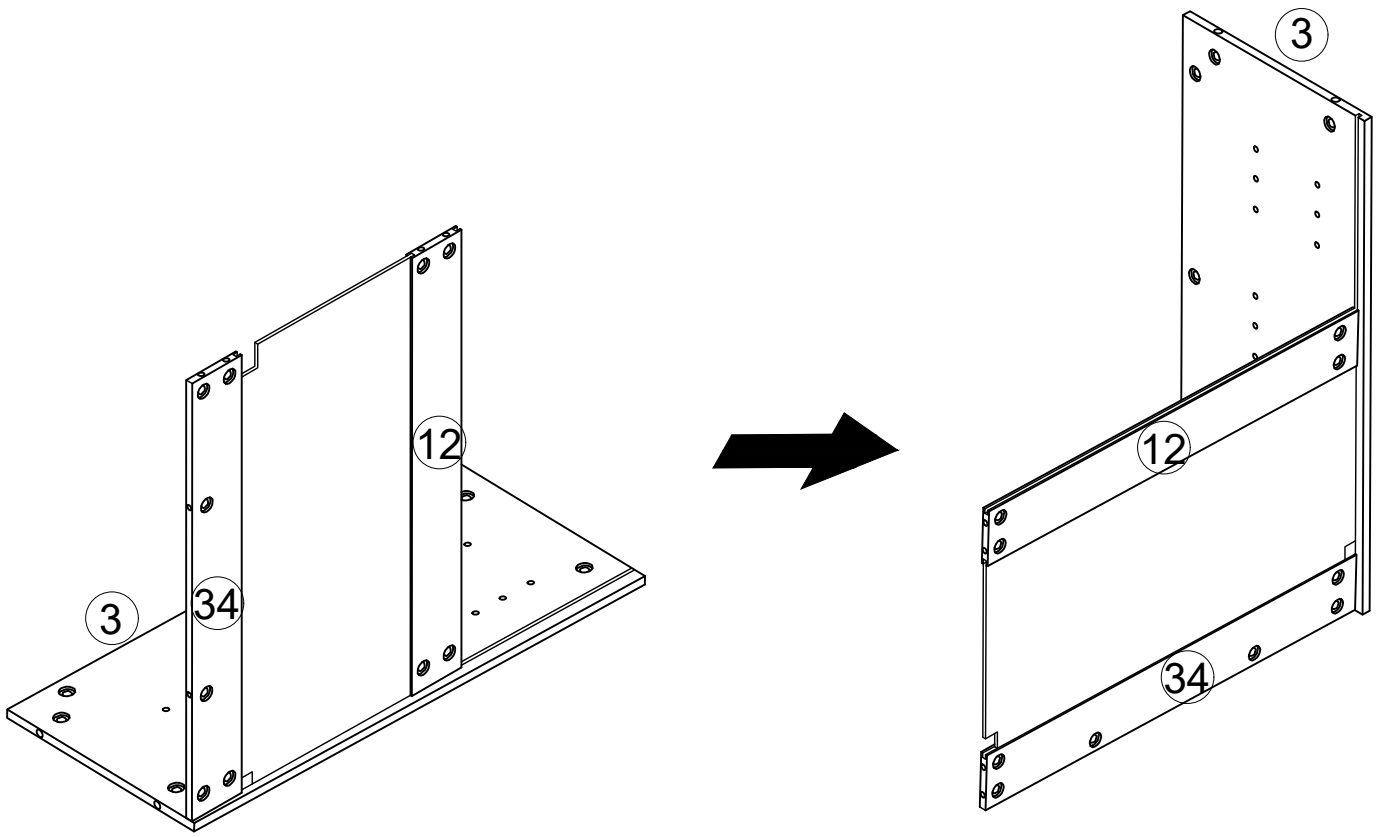

16

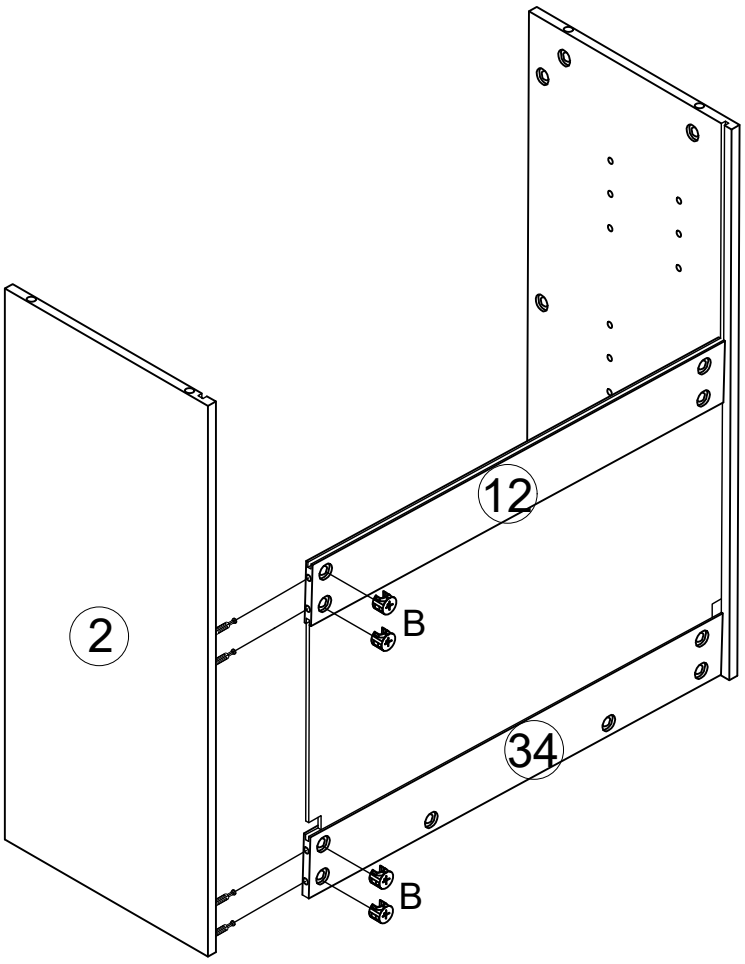

B	X 4

17

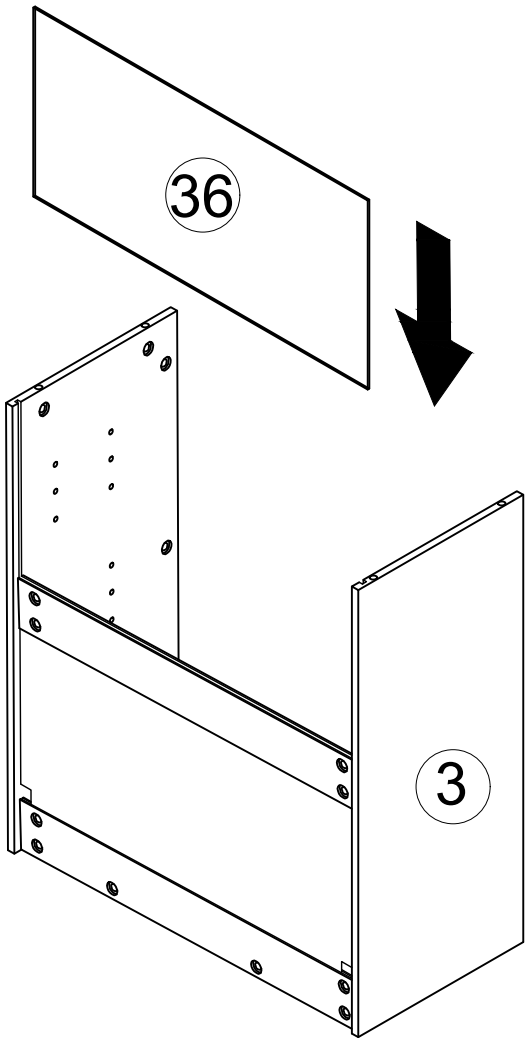

18

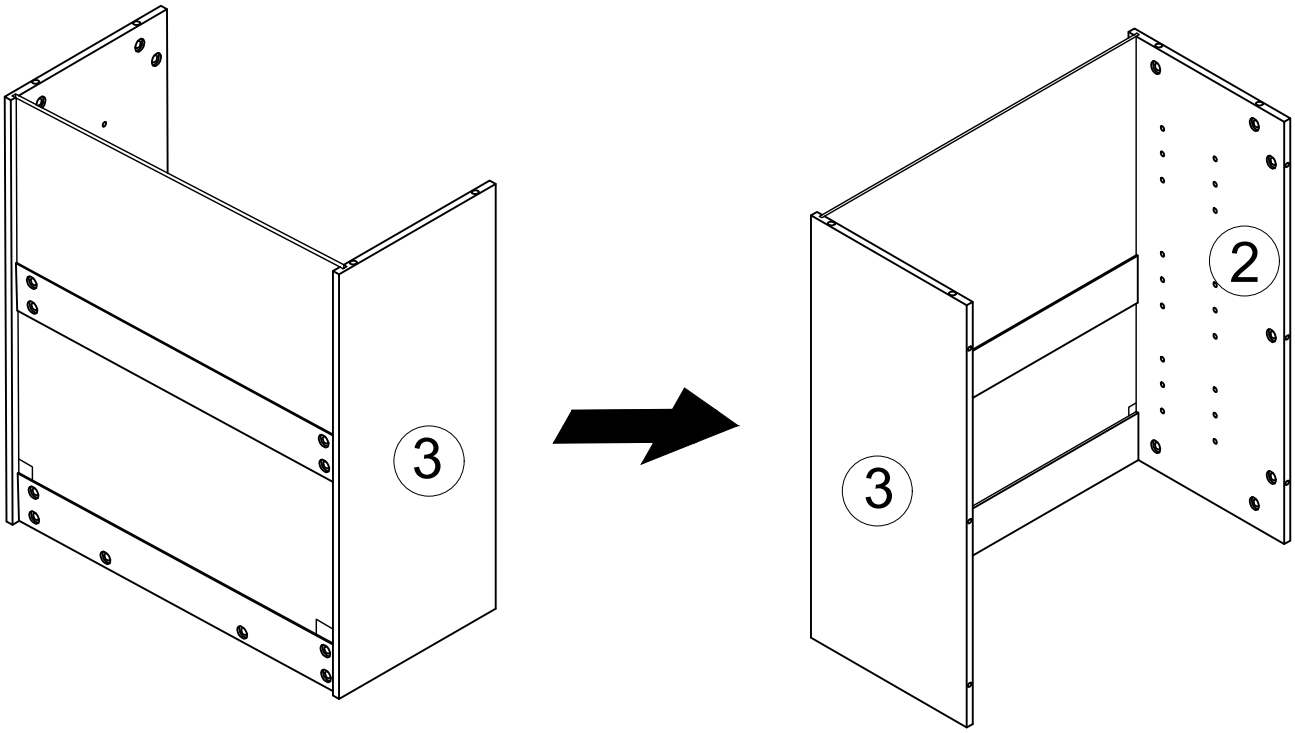

19

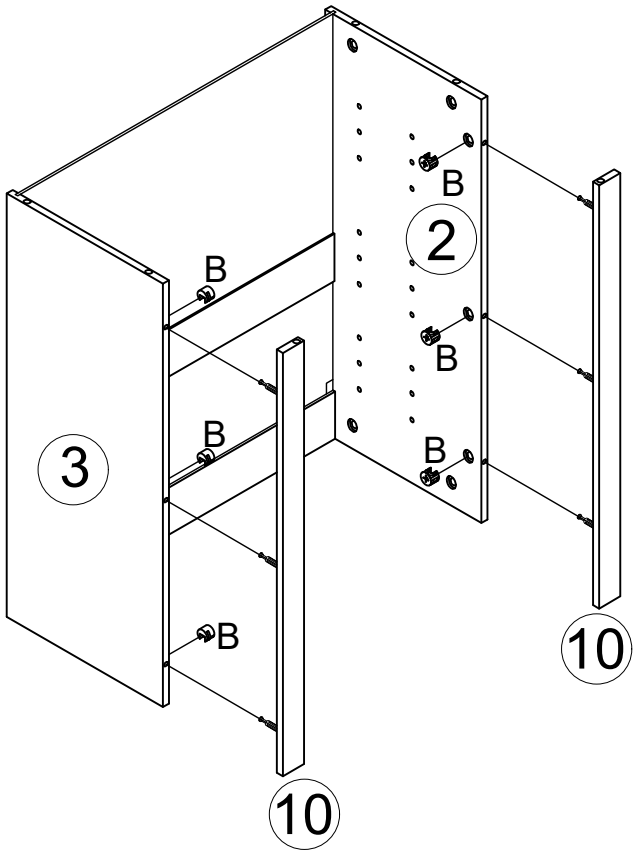

B	X 6

20

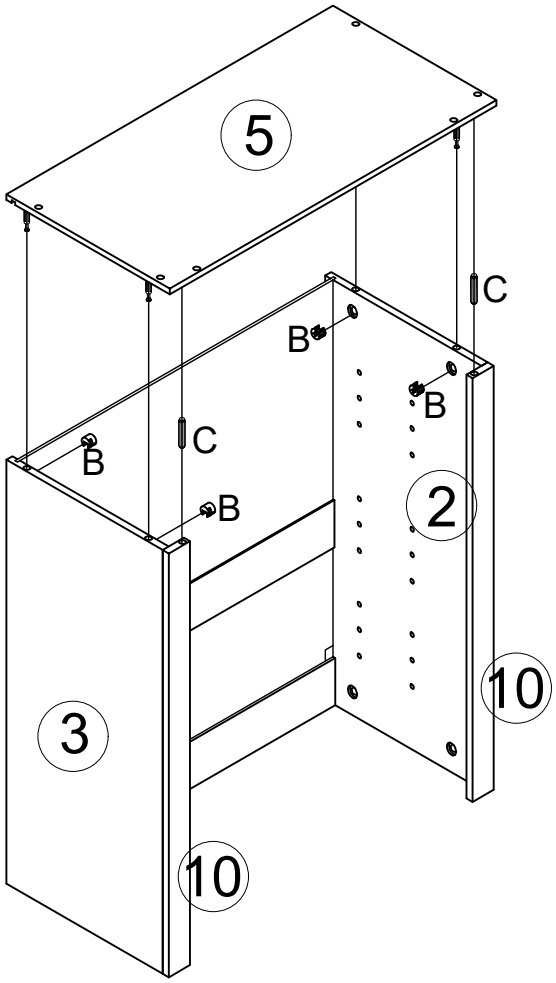

B		X 4
C		X 2

21

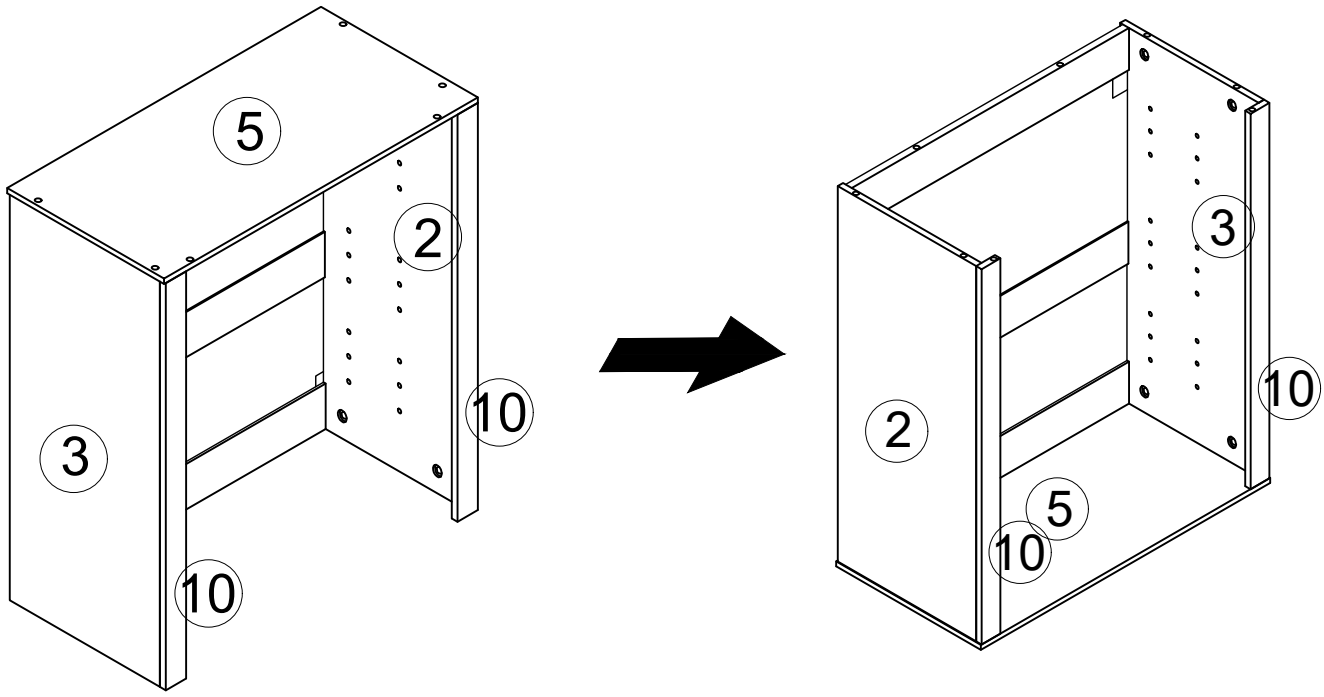

22

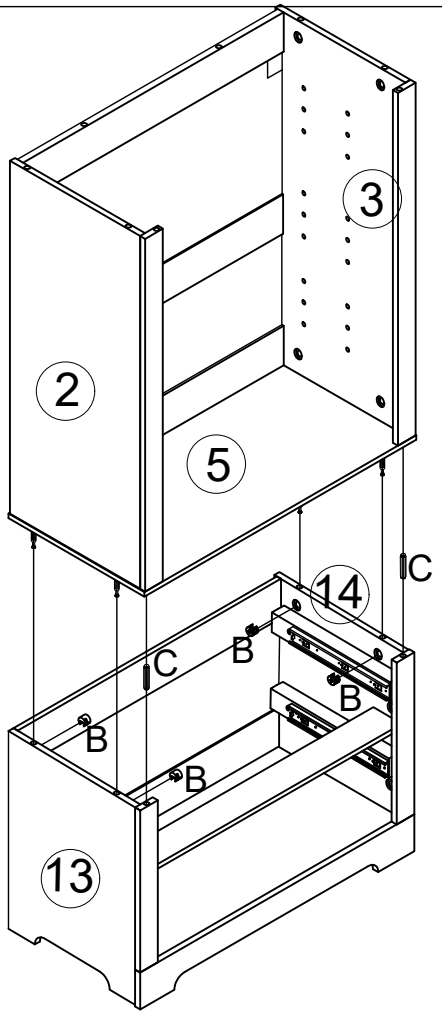

B		X 4
C		X 2

23

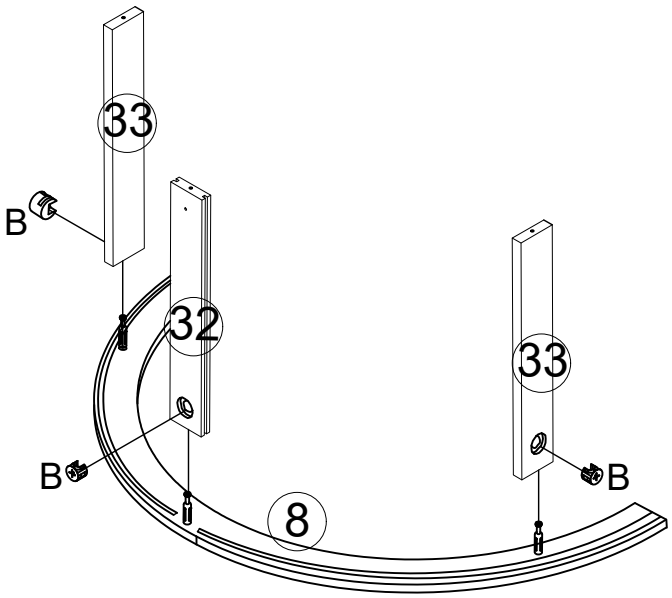

B		X 4

24

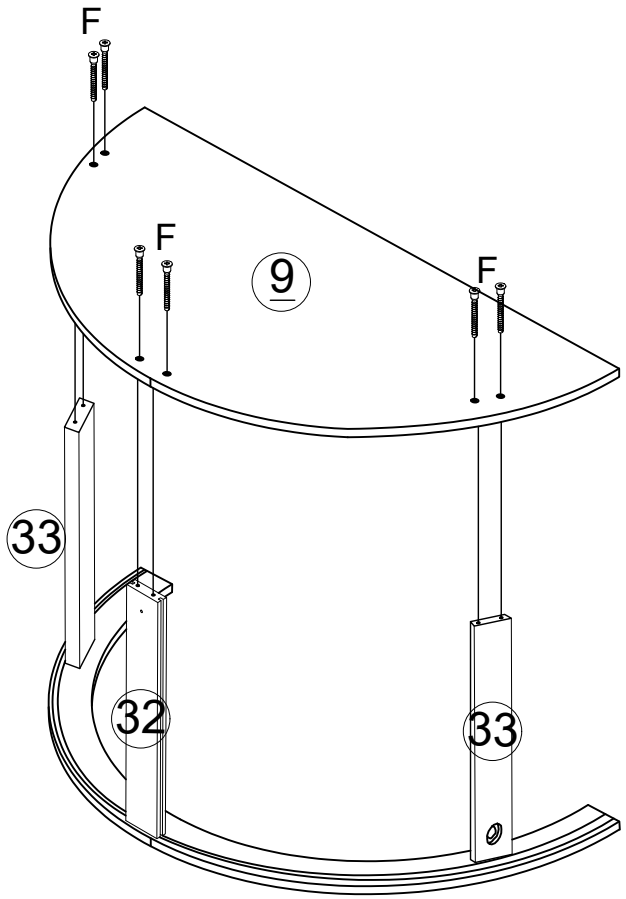

F		X 6

25

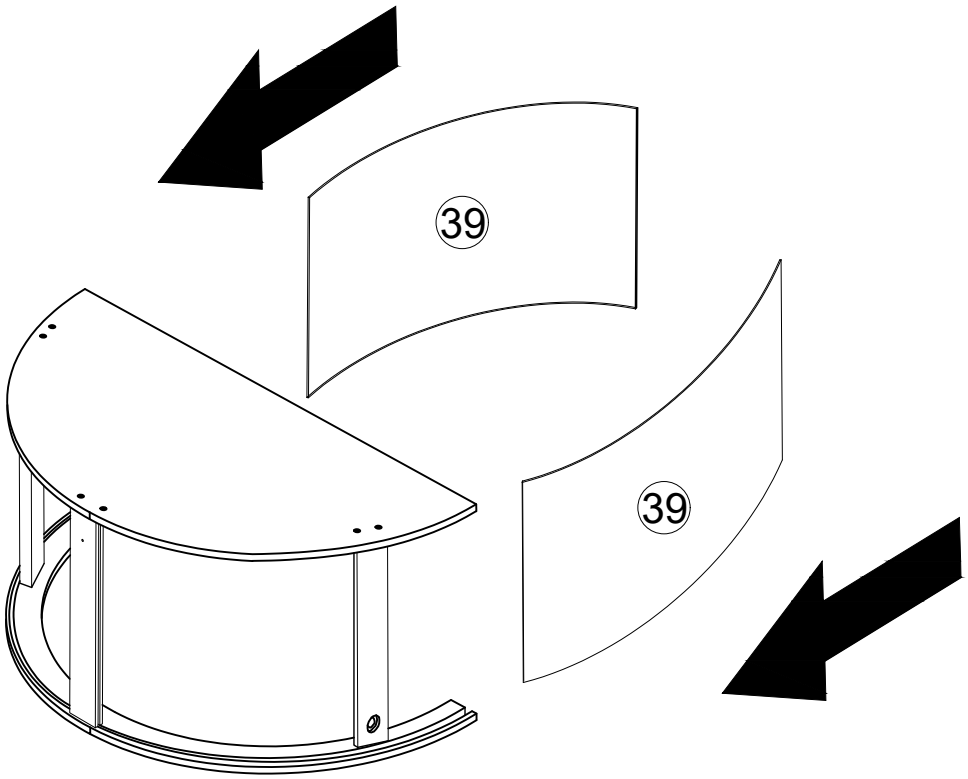

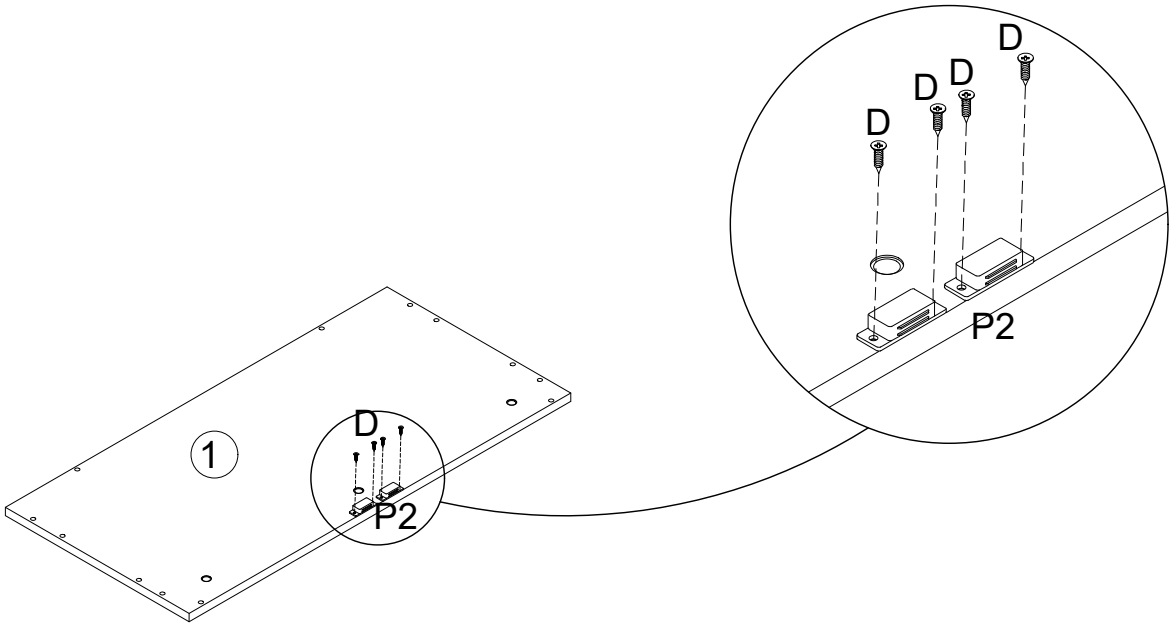

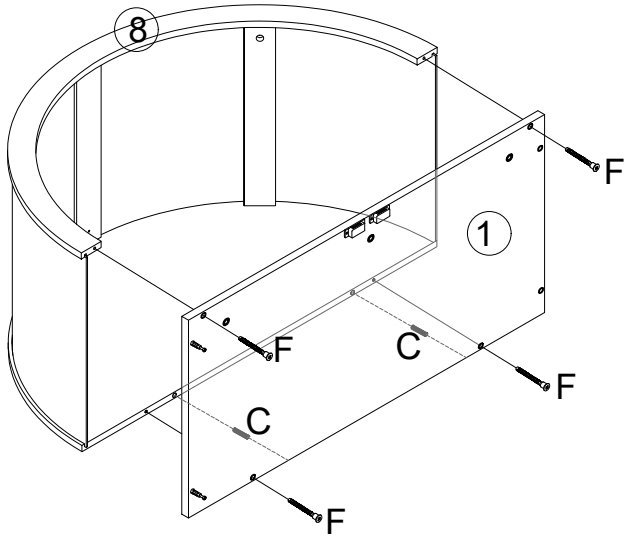

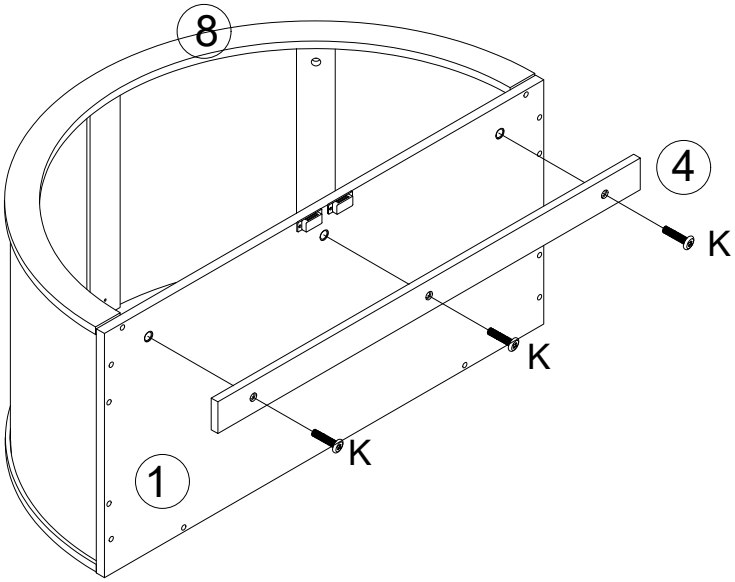

C		X 2
D		X 4
F		X 4
P2		X 2
K		X 3

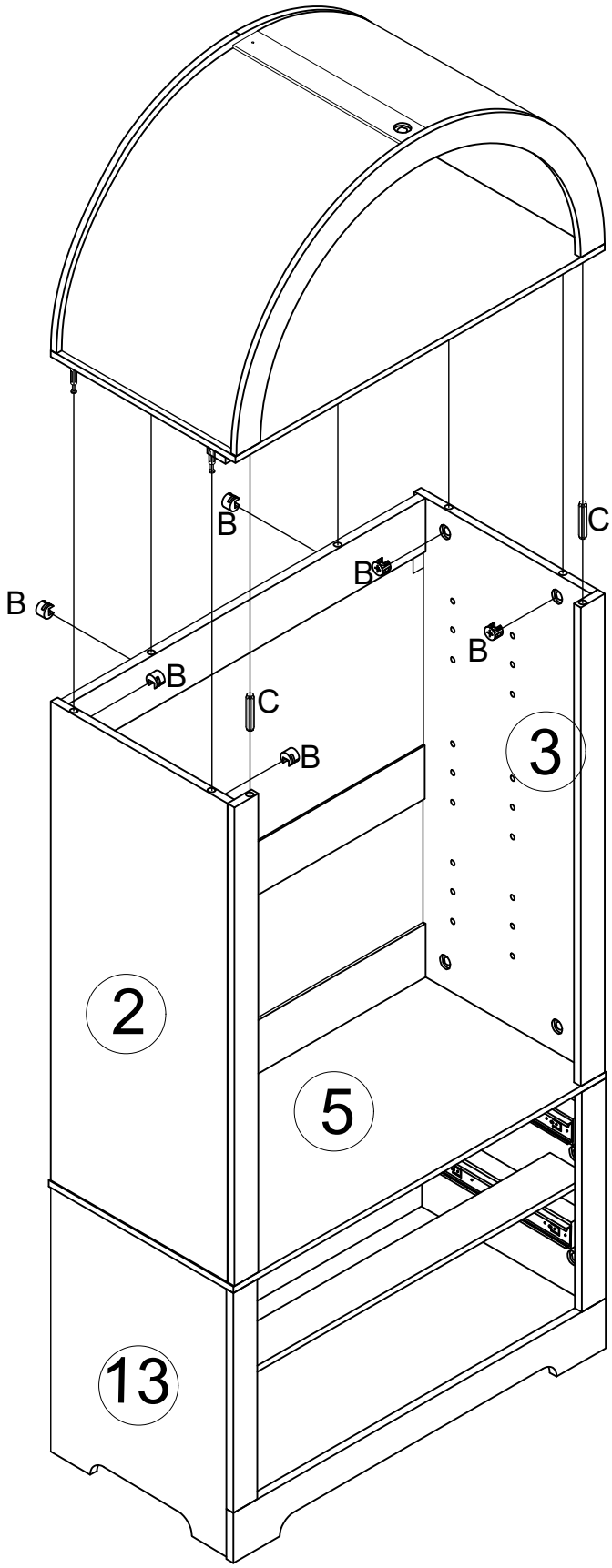

B		X 6
C		X 2

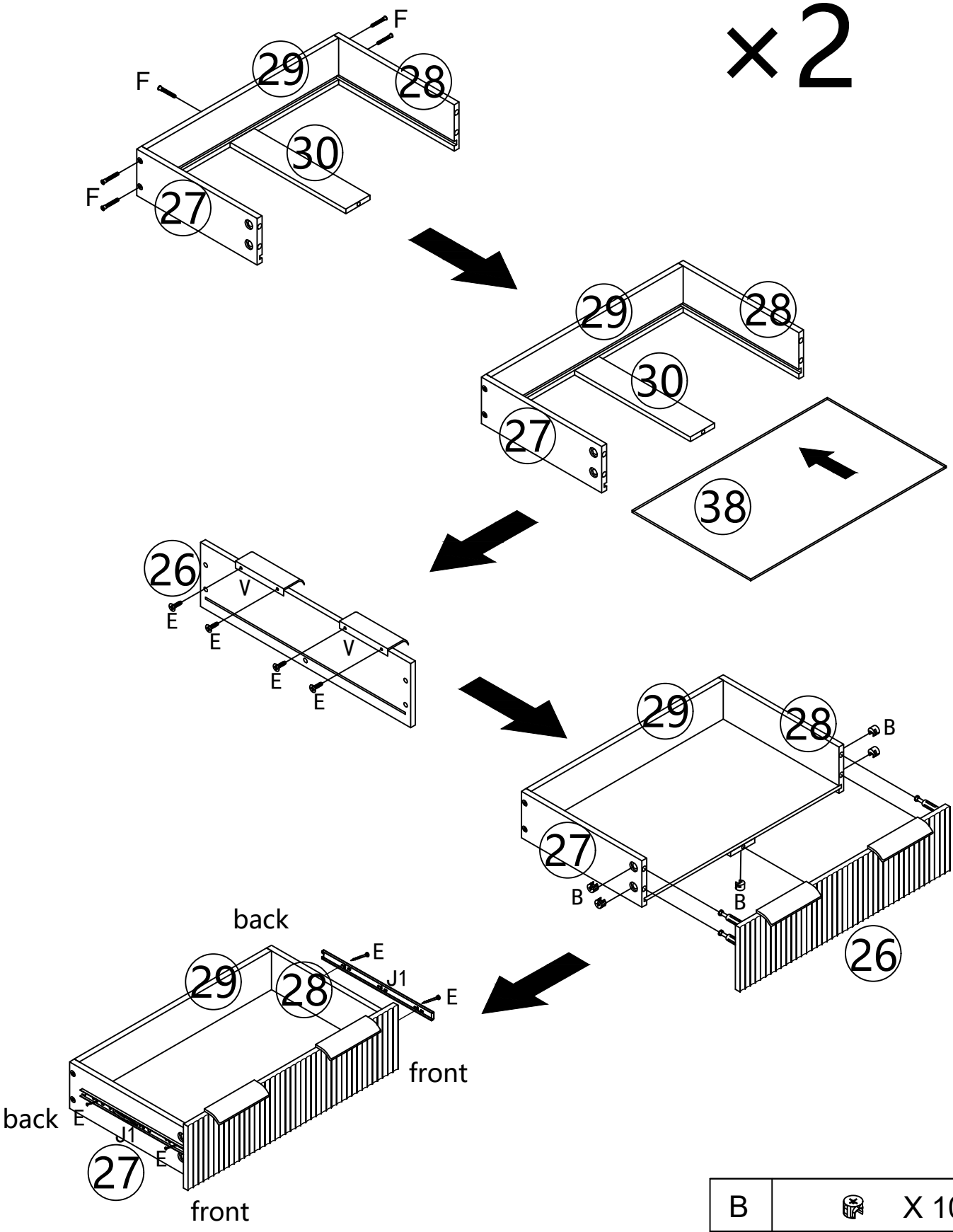

B		X 10
E		X 16
F		X 10
J1		X 4
V		X 4

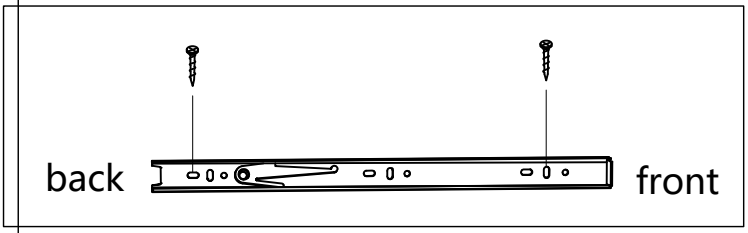

29

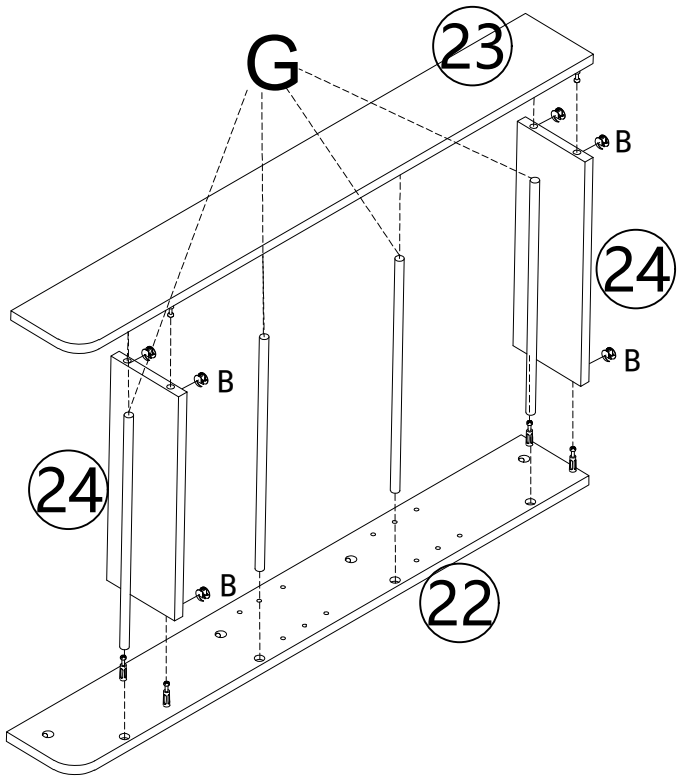

B		X 16
G		X 8

30

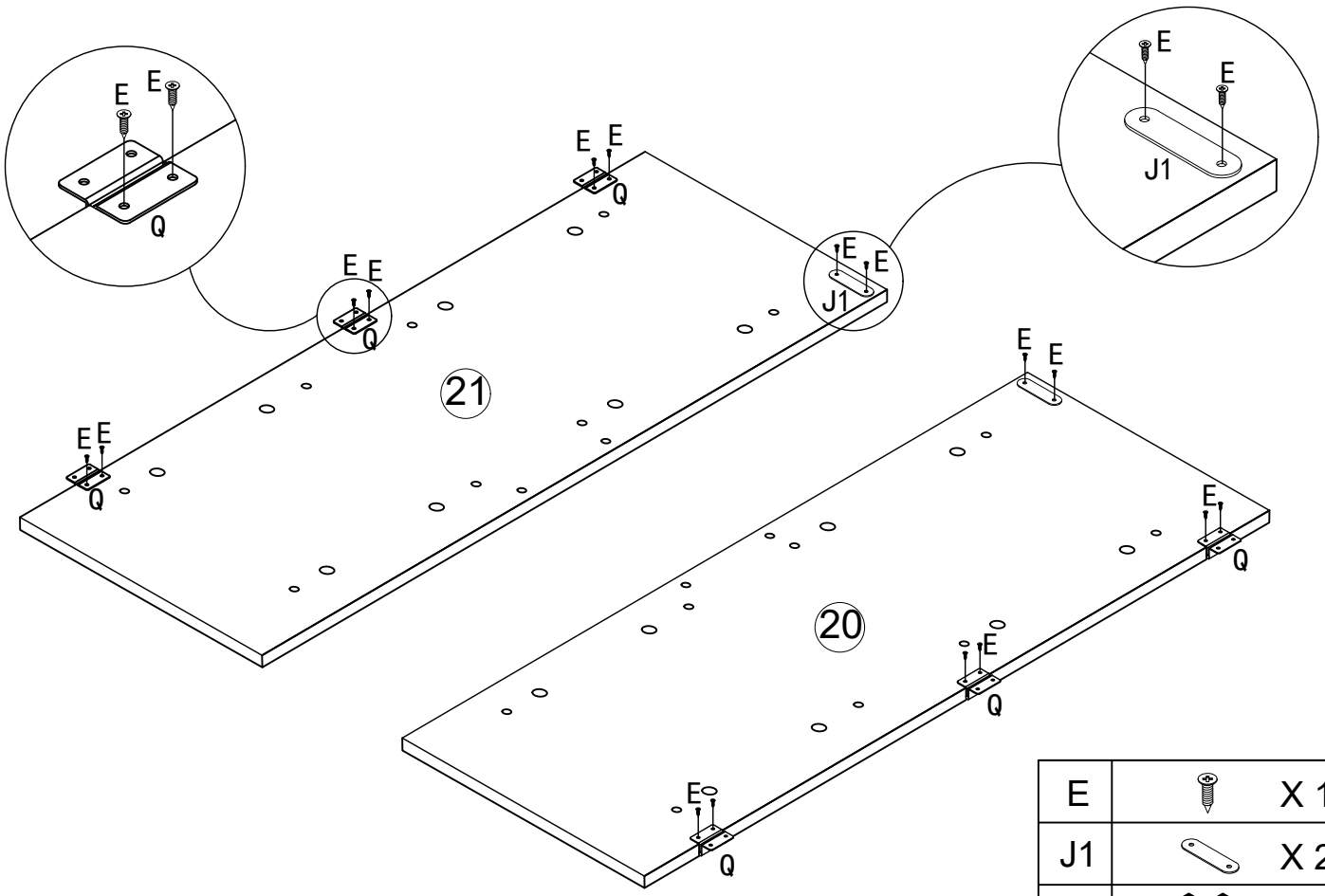

E		X 16
J1		X 2
Q		X 6

31

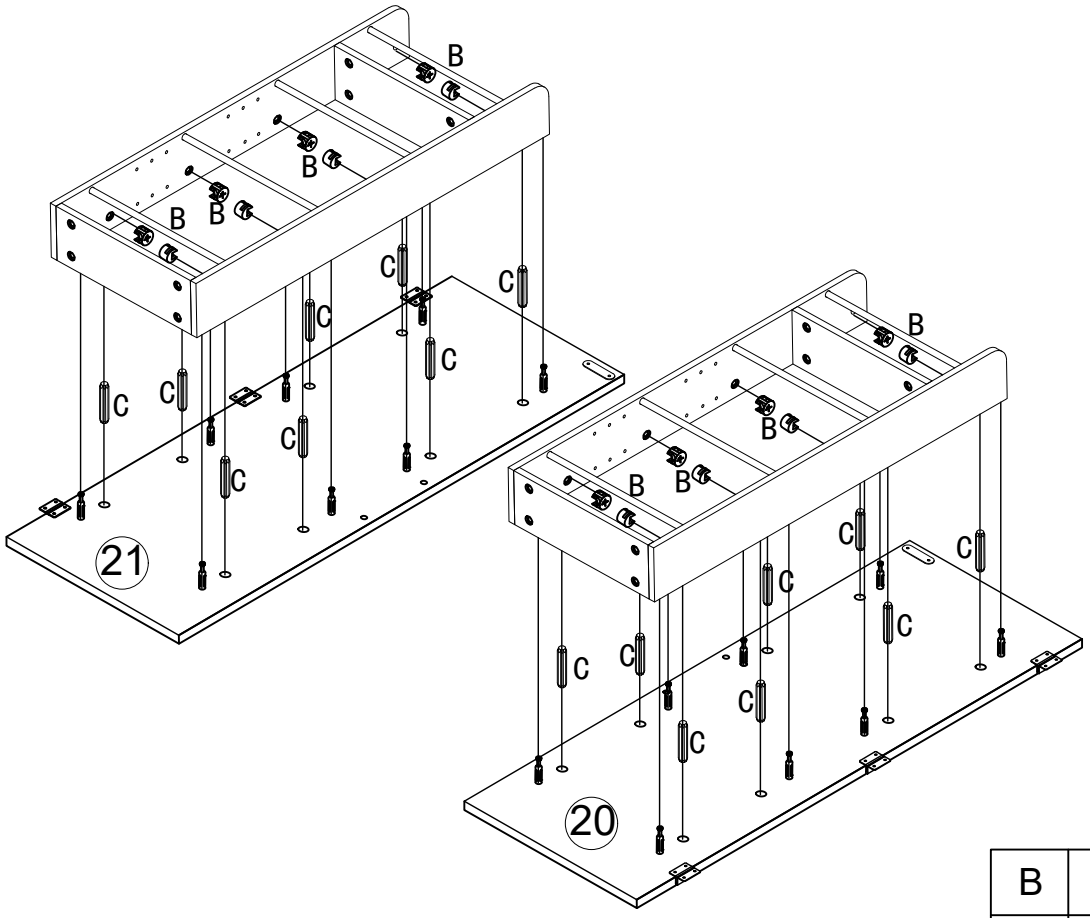

B		X 16
C		X 16

32

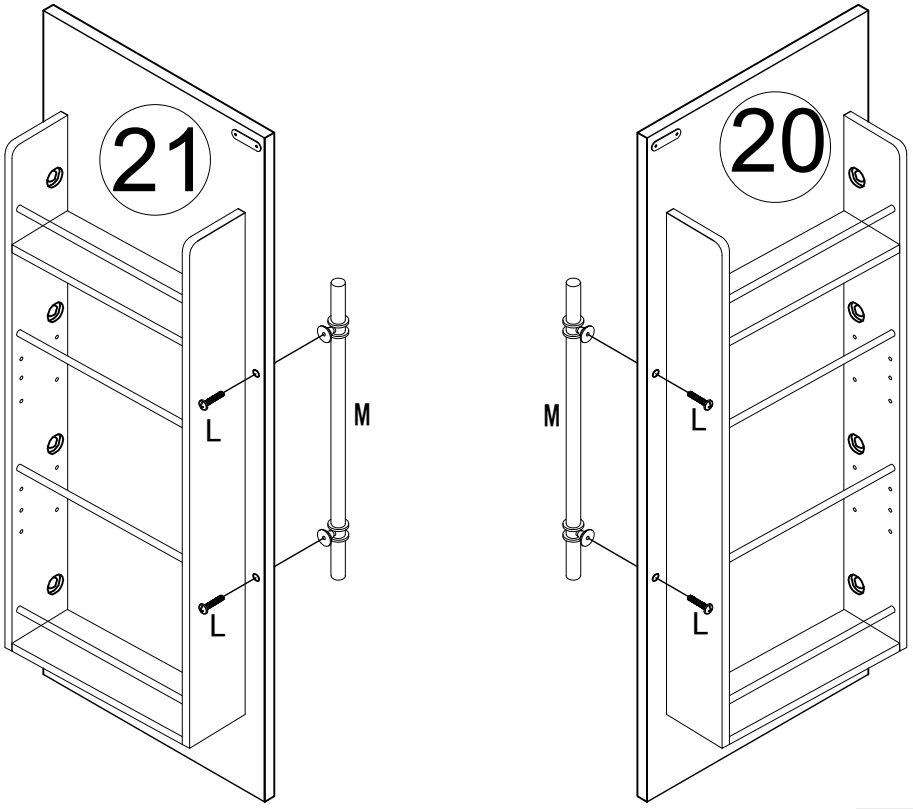

M		X 2
L		X 4

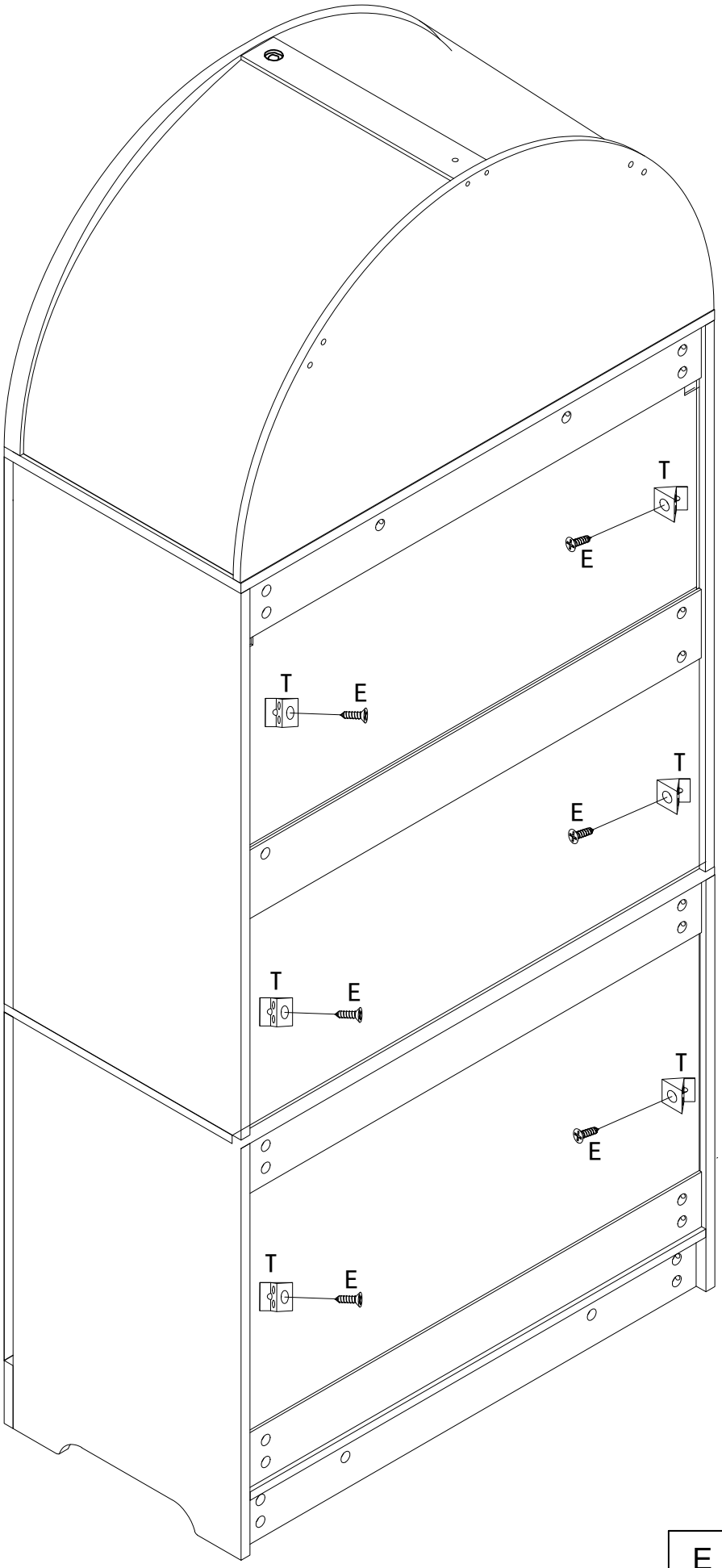

E		X 6
T		X 6

1.

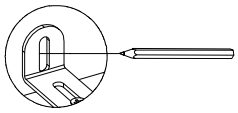

2.



3.

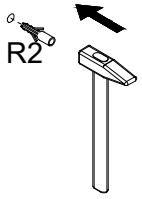

4.

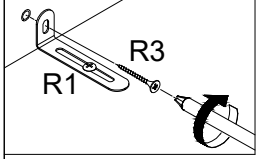







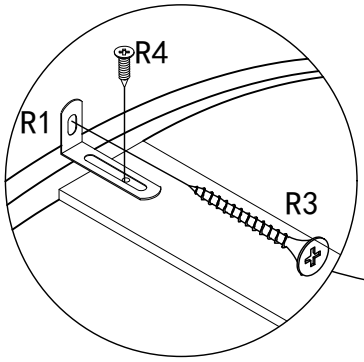

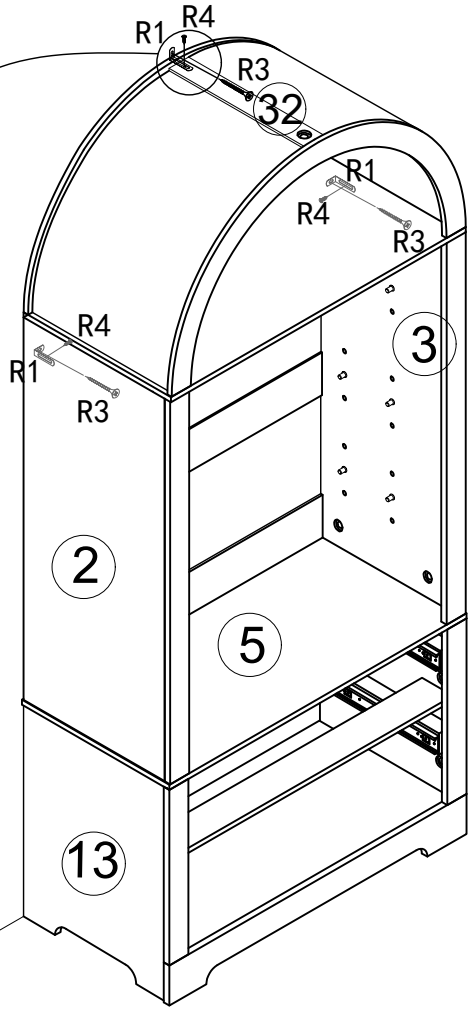

R	 X 3

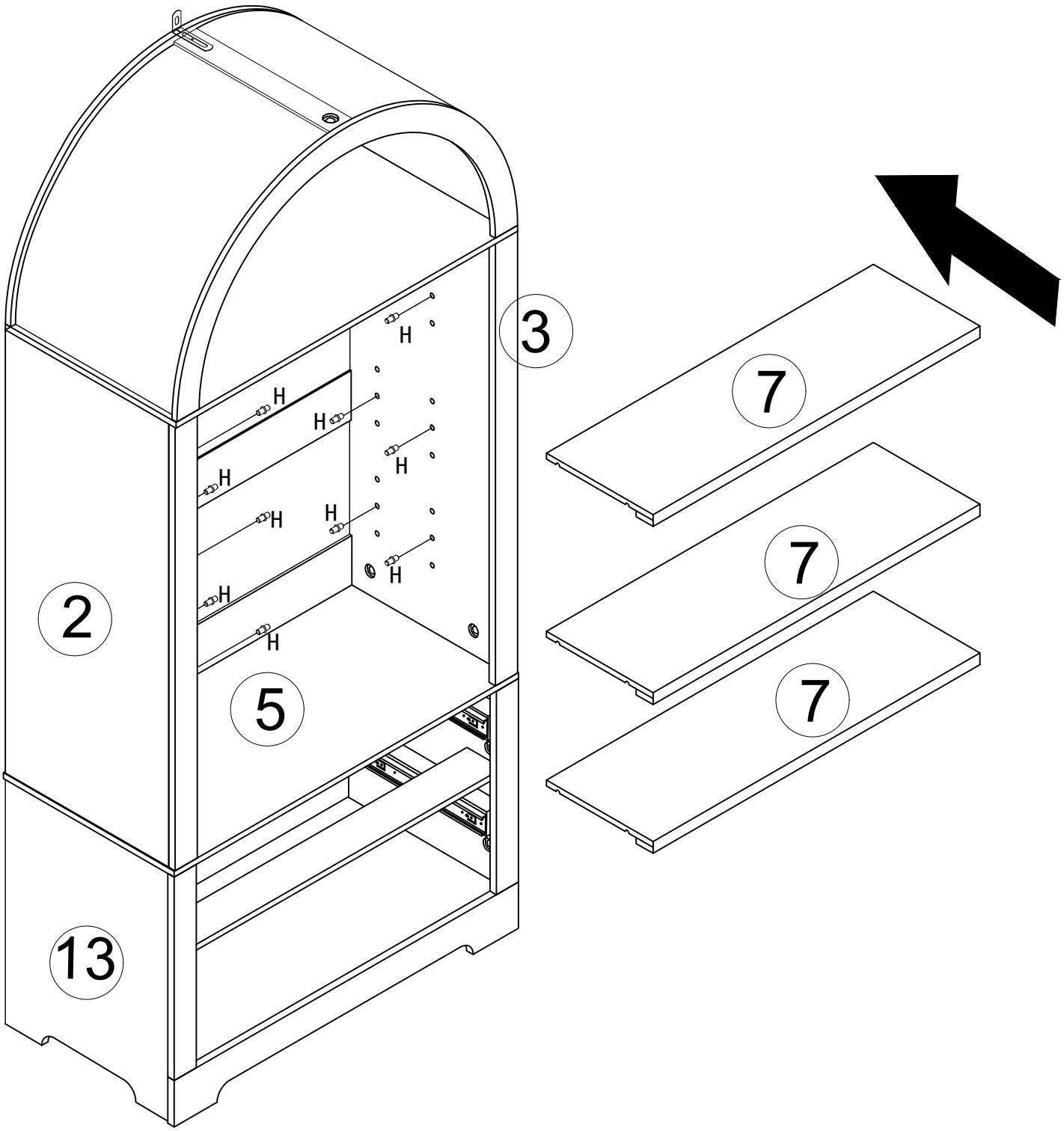

H	X 12

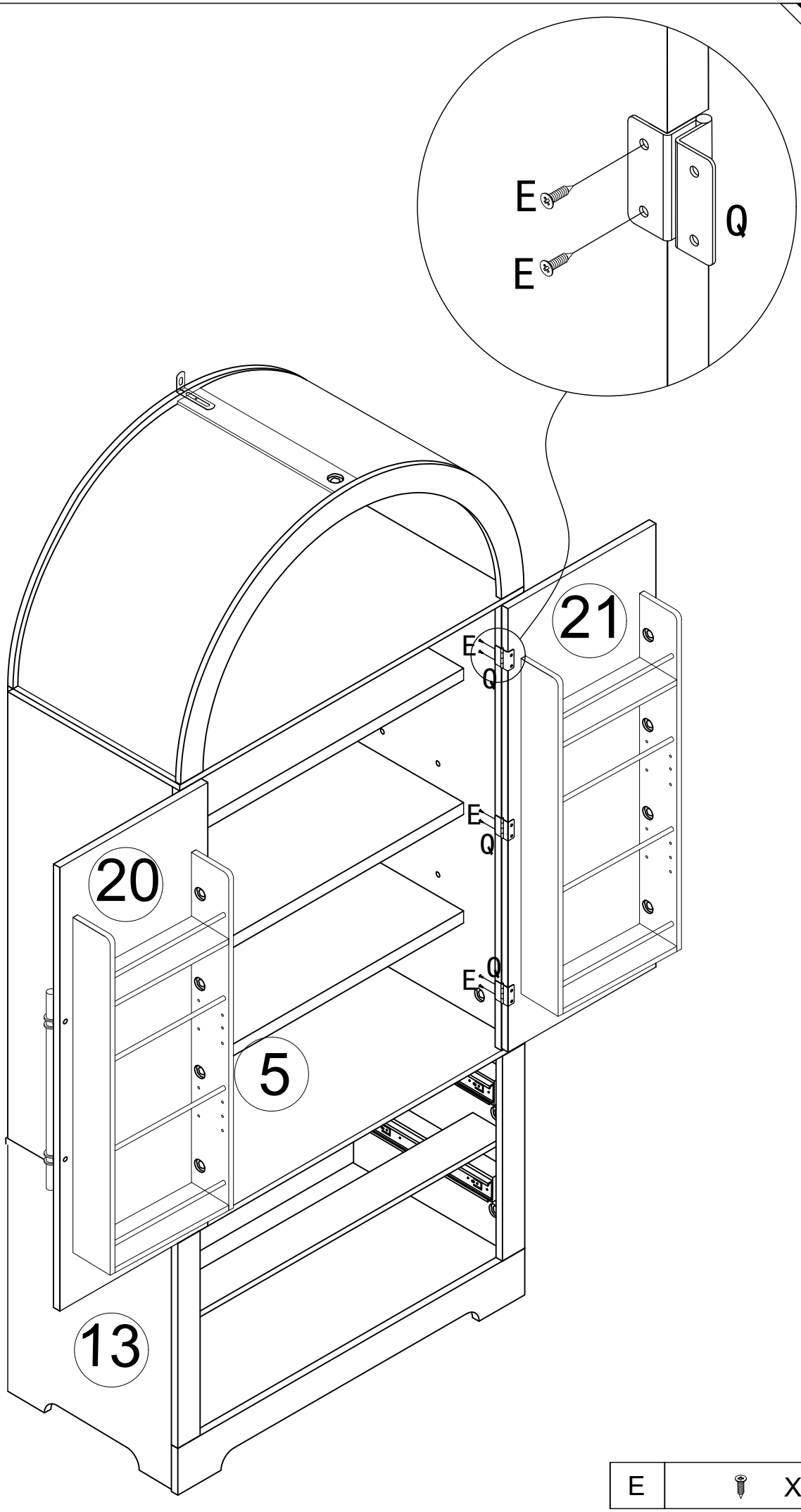

E		X 12

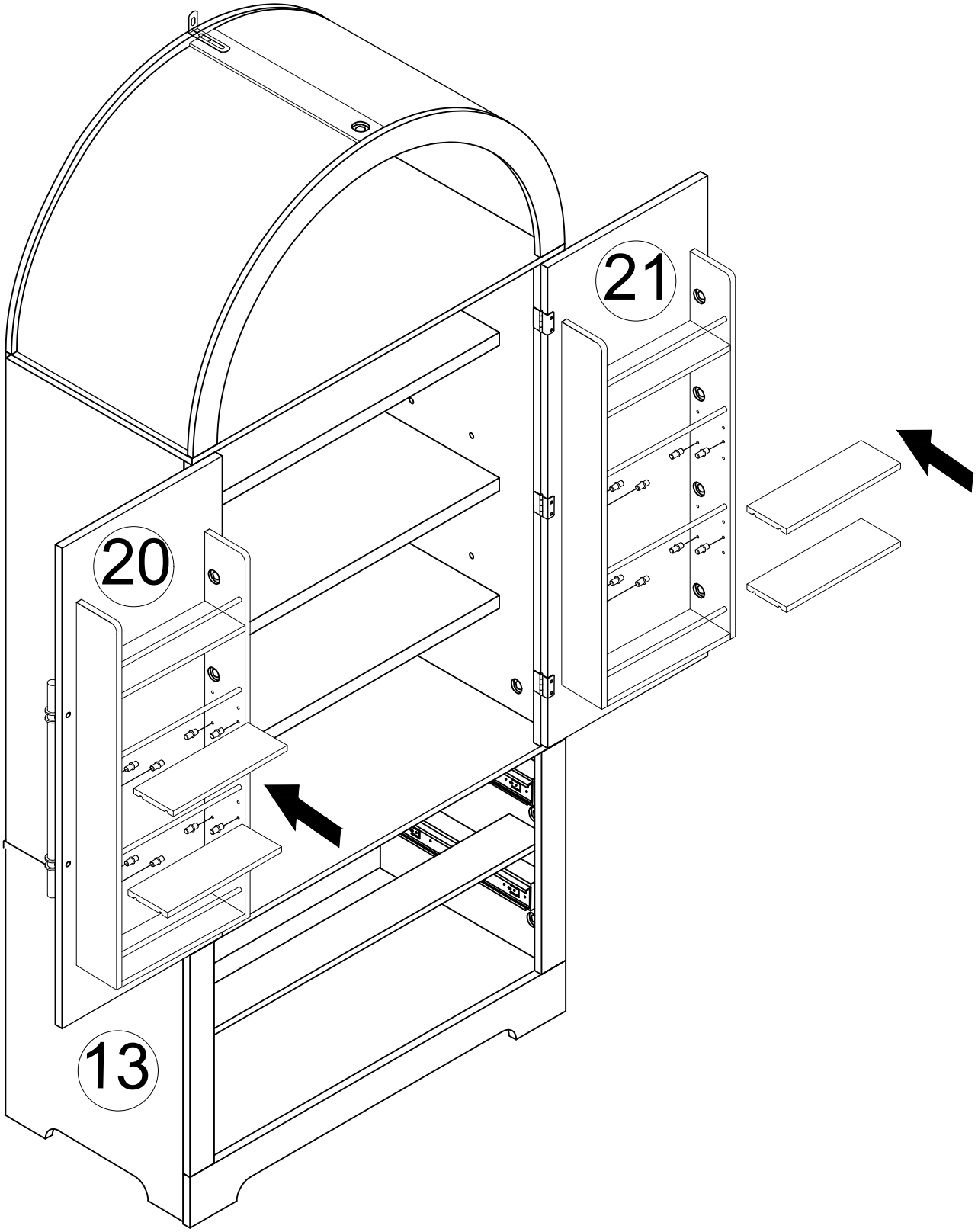

H		X 16

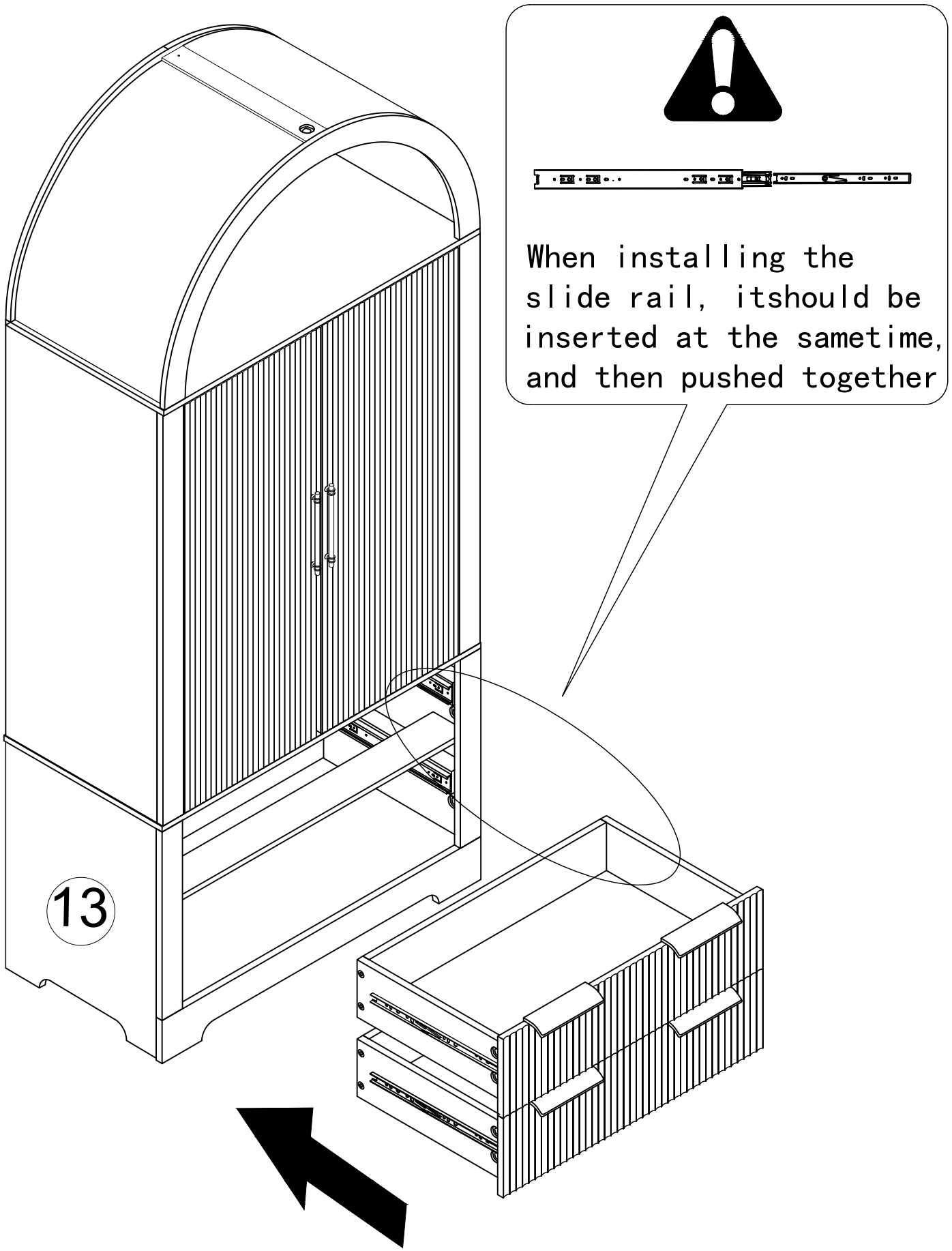
When installing the slide rail, itshould be inserted at the sametime, and then pushed together
13