INSTALLATION & USER MANUAL

52 INCH CEILING FAN WITH LIGHT

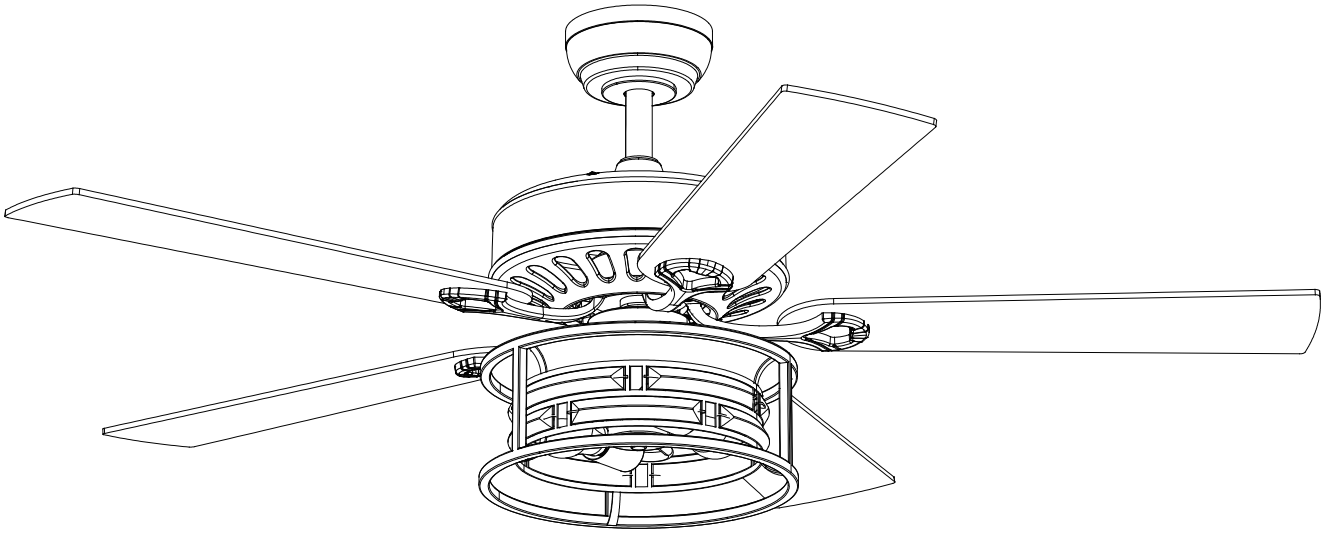

WARNING: Do not use dimmable bulbs with this fixture, as it may cause flickering or compatibility issues, preventing proper operation.

ITEM#37007

Customer Service: support@ceilingfanhelp.com

Contents

Contents.....2
Safety Information.....2
Dimension Reference.....3
Included Hardware.....3
Included Fan Parts.....3
Exploded View.....4
Installation Instructions 5–9
Operation 10
Troubleshooting Guide 11
Balancing Kit 12

Safety Information

READ AND SAVE THESE INSTRUCTIONS.

1. To reduce the risk of electric shock, ensure electricity has been turned off at the circuit breaker or fuse box before you begin.

2. All wiring must be in accordance with the National Electrical Code “ANSI/NFPA 70” and local electrical codes. Electrical installation should be performed by a qualified licensed electrician.

3. Make sure the outlet box and its support structure are securely mounted and rated to safely support a fan weighing up to 35 lbs (15.9 kg). Use only UL-listed outlet boxes that are clearly marked “Acceptable for Fan Support of 35 lbs (15.9 kg) or less.” If you are unsure about safety or compatibility, please consult a qualified electrician.

4. Do not place objects in the path of the blades.

5. To clean the fixture, turn off the power, wait for it to cool, and wipe the fixture with a clean dry, soft cloth.

6. After making electrical connections, spliced conductors should be bent upward and pushed carefully up into the outlet box. The wires should be spread apart with the grounded conductor and the equipment-grounding conductor on one side of the outlet box and ungrounded conductor on the other side of the outlet box.

7. All screws must be checked and retightened where necessary before installation.

WARNING: To reduce the risk of electrical shock or fire, do not use this fan with any solid-state fan speed control device, as it will permanently damage the electronic circuitry.

WARNING: To reduce the risk of electrical shock, this fan should not be installed with an isolating wall control or switch, as it may cause incompatibility issues.

WARNING: To reduce the risk of personal injury, do not bend the blade brackets when installing or balancing the blades, or when cleaning the fan. Do not insert objects.

WARNING: To reduce the risk of fire, electric shock or personal injury, mount to outlet box marked “acceptable for fan support of 35 lbs. (15.9 Kg) or less” and use screws provided with the outlet box.

WARNING: To avoid possible electrical shock, turn the electricity off at the main fuse box before wiring.

WARNING: To reduce the risk of electrical shock, this fan should not be installed with an isolating wall control or switch, as it may cause incompatibility issues.

CAUTION: To reduce the risk of personal injury, use only the screws provided with the outlet box.

CAUTION: Please use carefully when working around or cleaning the fan to avoid injury or damage to the fan.

CAUTION: The fan must be mounted with a minimum of 7.5 feet (2.3 meters) clearance from the trailing edge of the blades to the floor.

CAUTION: Changes or modifications not expressly approved by the party responsible for compliance could void the user’s authority to operate the equipment.

Dimension Reference

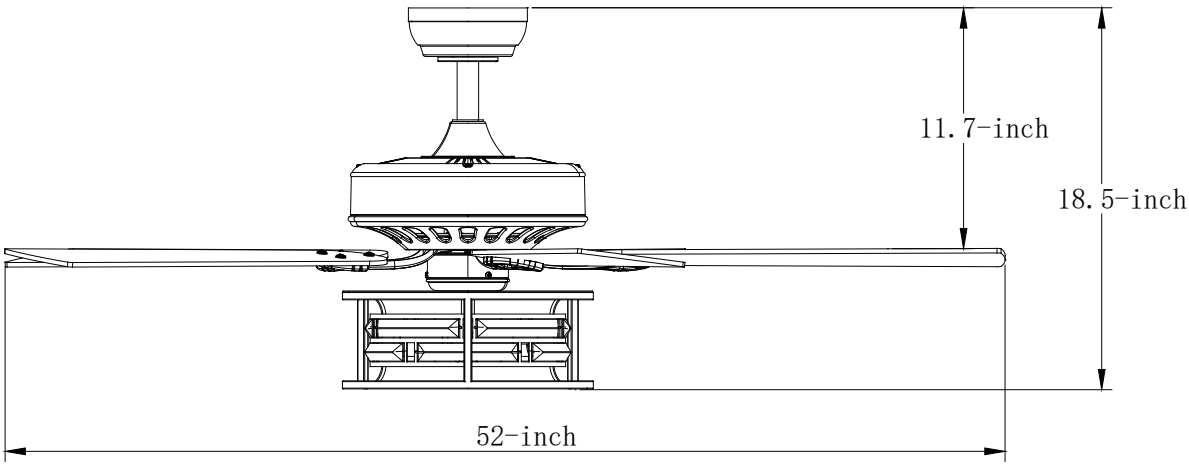

Included Hardware

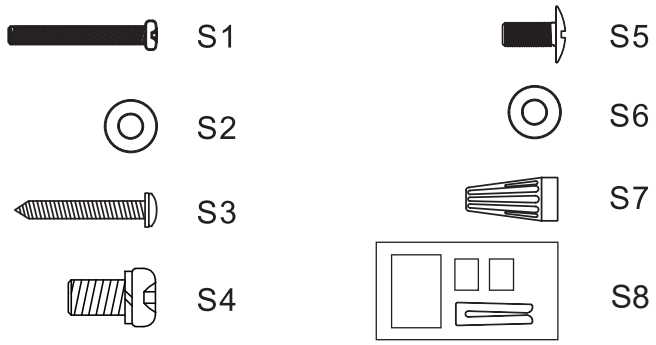

Hardware Package	Quantity
S1.Machine Screw	2
S2.Washer	4
S3.Wood Screw	4
S4.Blade Arm Screw	11
S5.Blade Screw	16
S6.Washer(Red)	16
S7.Wire Nut	3
S8.Balance Kit	1

Included Fan Parts

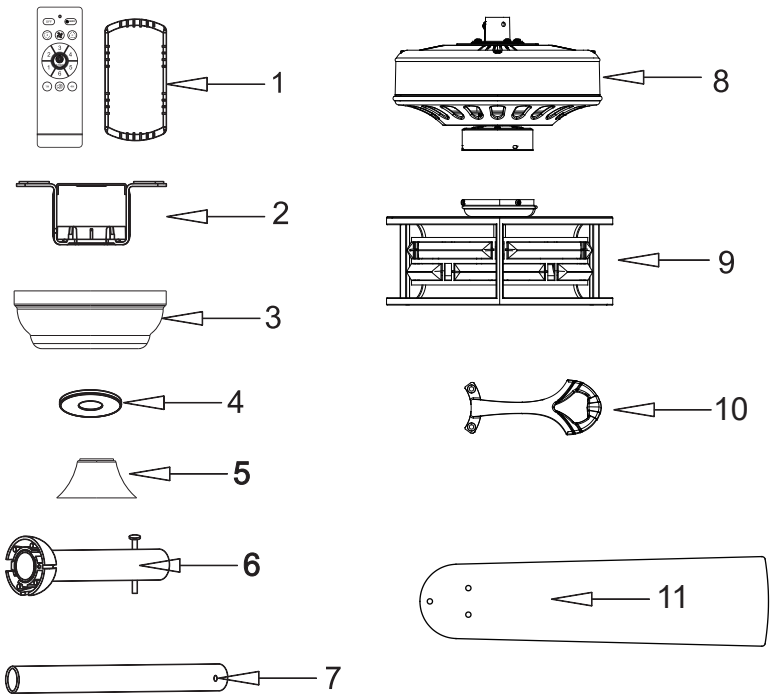

Item Name	Quantity
1.Remote Control	1
2.Mounting Bracket	1
3.Canopy	1
4.Canopy Cover	1
5.Yoke Cover	1
6.Short Downrod	1
7.Long Downrod	1
8.Motor Housing	1
9.Lamp Housing	1
10.Blade Arm	5
11.Blade	5

Exploded View

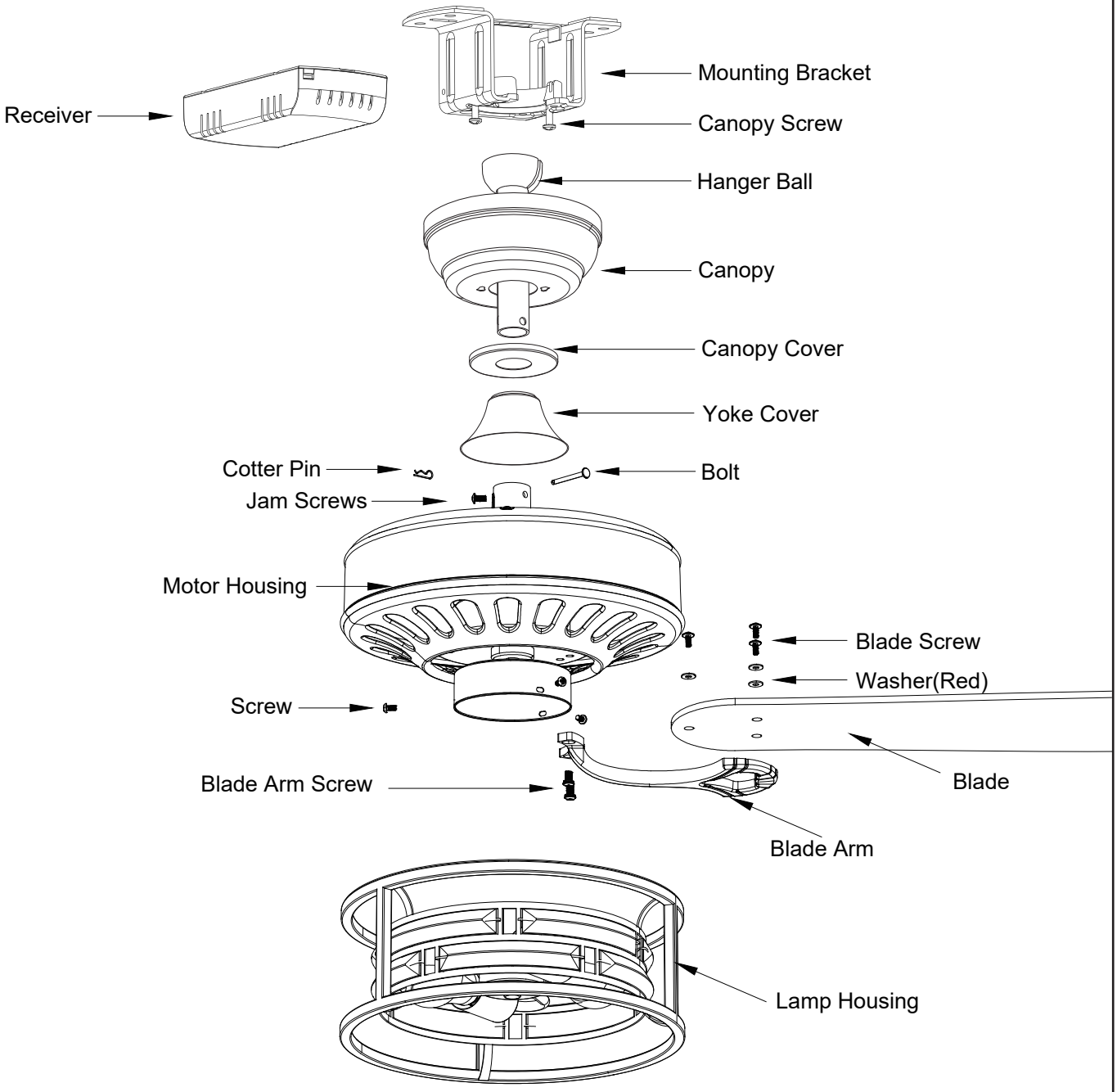

Installation Instructions

Step1 Mounting the Downrod

-Take out the fan downrod.
-Remove cotter pin and bolt from short downrod.
-Take out fan motor housing.
-Loosen the jam screws on the yoke until it is flush with the inside surface.
-Place short downrod into canopy, canopy cover and yoke cover.
-Put the motor outlet wires through the yoke cover, canopy cover and downrod.
-Insert the bolt into the hole in the downrod, being careful not to damage or cut the fan wires.
-Tighten the bolt and secure it with a cotter pin through the hole in the end of the bolt.
-Tighten the jam screws to secure the downrod in place.
-Slide the yoke cover down so it is flush with the motor housing.

CAUTION: To ensure wobble-free operation and prevent damage to the fan, the downrod and set screws must be fully tightened.

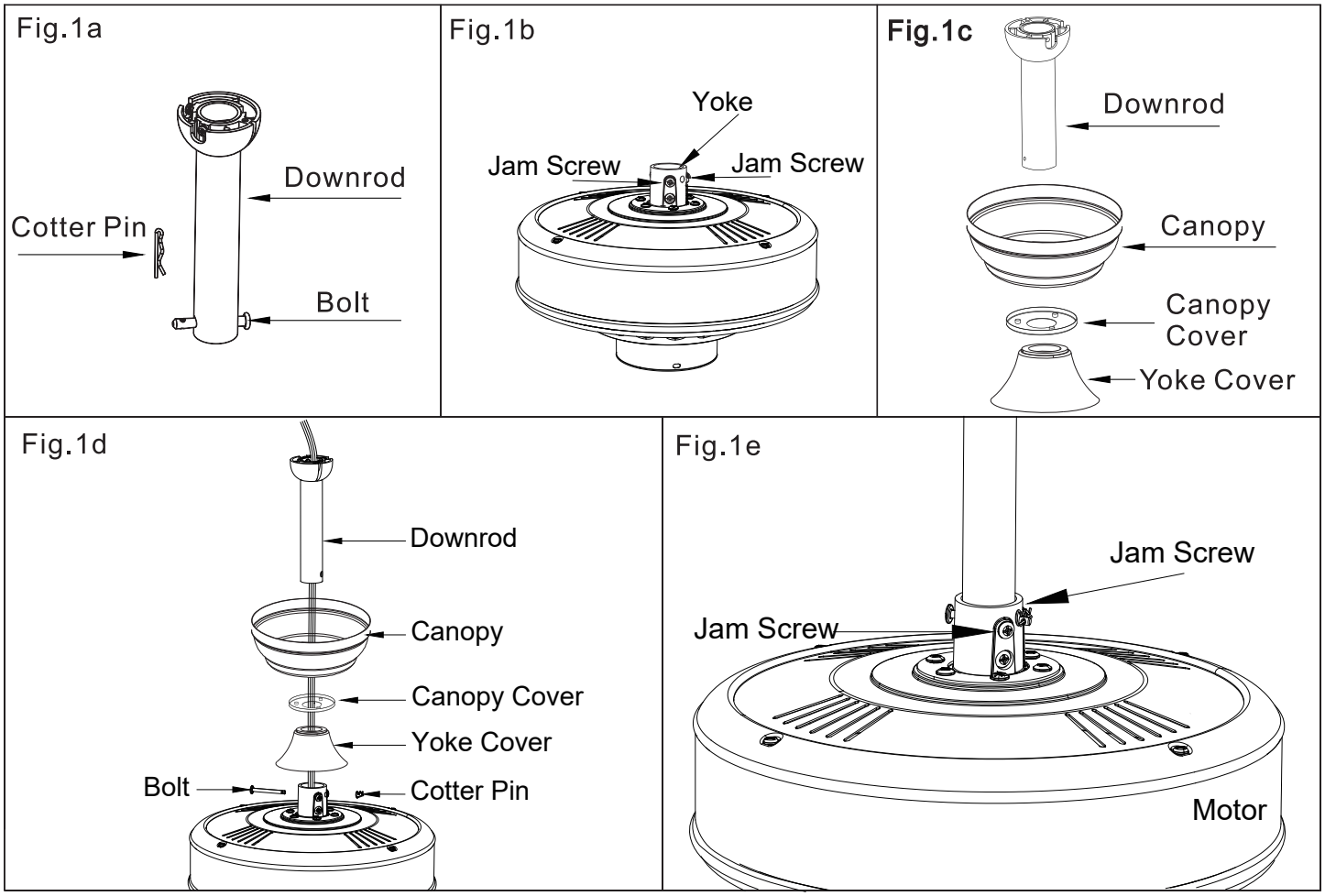

Installation Instructions

-Remove the shipping blocks from the motor. Keep the blade screws.These will be used during blade arm installation.

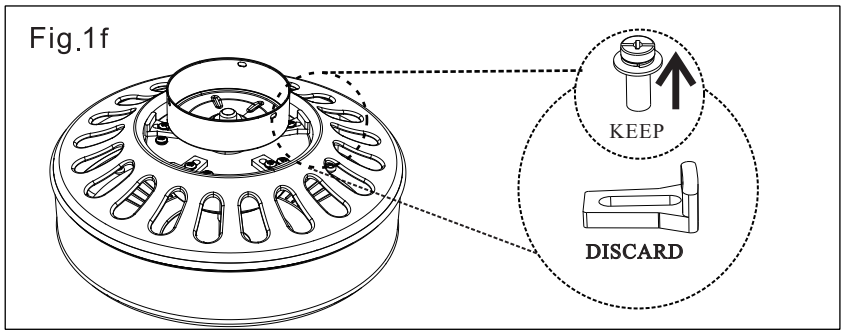

Step2 Installing the Mounting Bracket

WARNING: To reduce the risk of fire, electric shock, or personal injury, mount to a UL/CS - listed outlet box marked “Acceptable for Fan Support” and use the mounting screws provided with the outlet box.

-Attach the hanger to the metal outlet box securely.
-Lift the motor assembly into place and insert the hanger ball into the bracket. Rotate the downrod until the groove drops into the registration slot and locks in. If installed correctly, the downrod will not rotate.

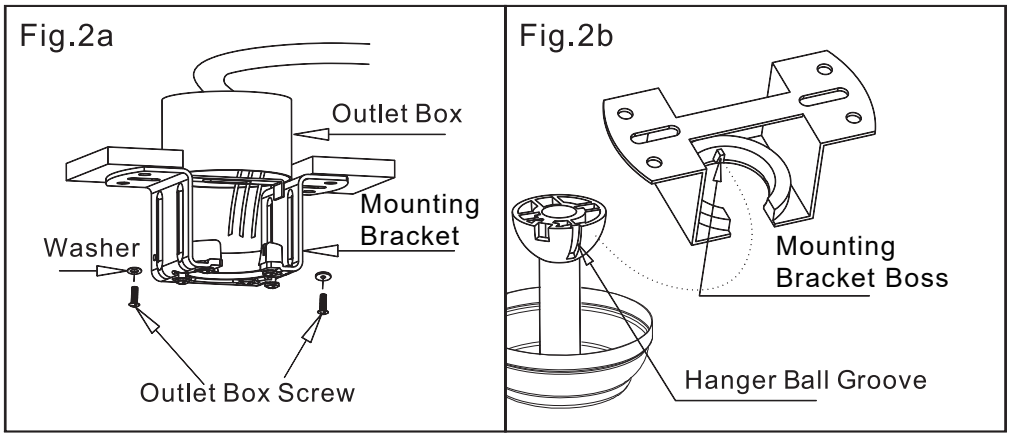

Step3 Attaching the Fan Blades

-Attach the blades to the blade arm using blade screws and washers.
Repeat the same procedure for each blade component.
-Connect the blade arm to the motor.

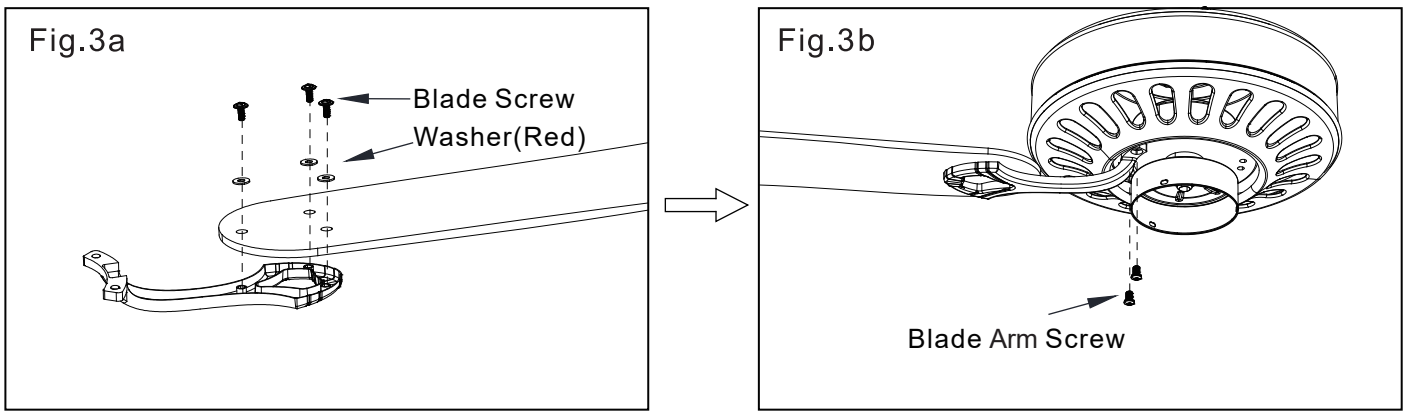

Step4 Assembling the Lamp Housing

-Connect the motor wires to the wires from the lamp housing.
-Secure the lamp housing by tightening the three screws on the mounting plate.

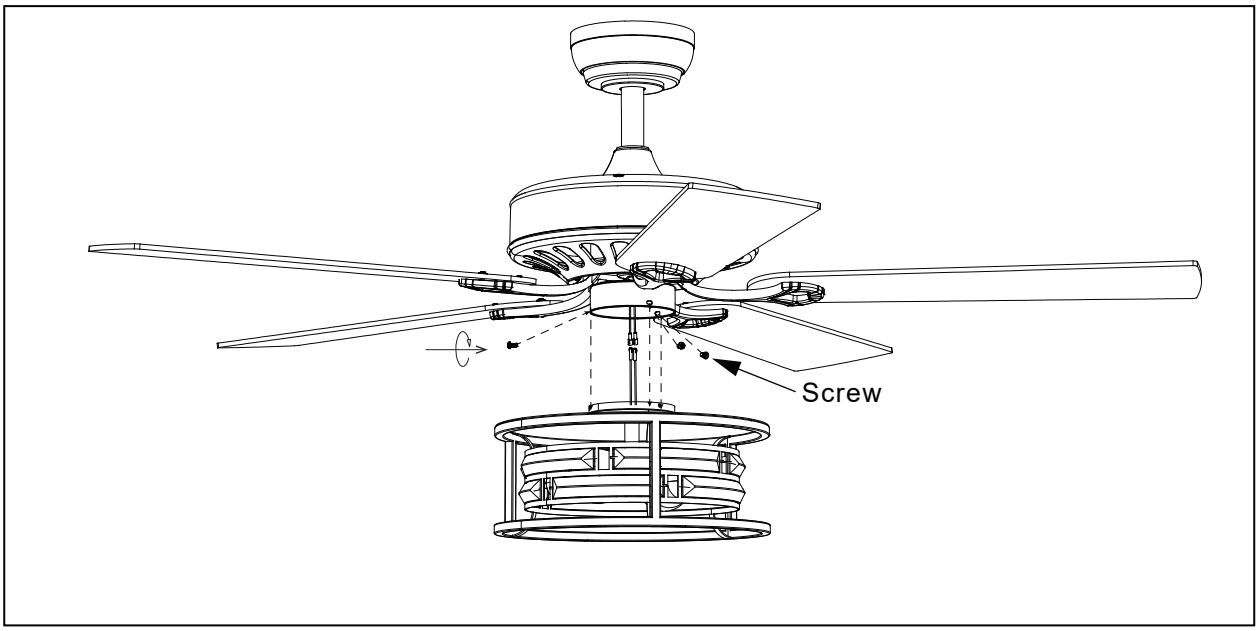

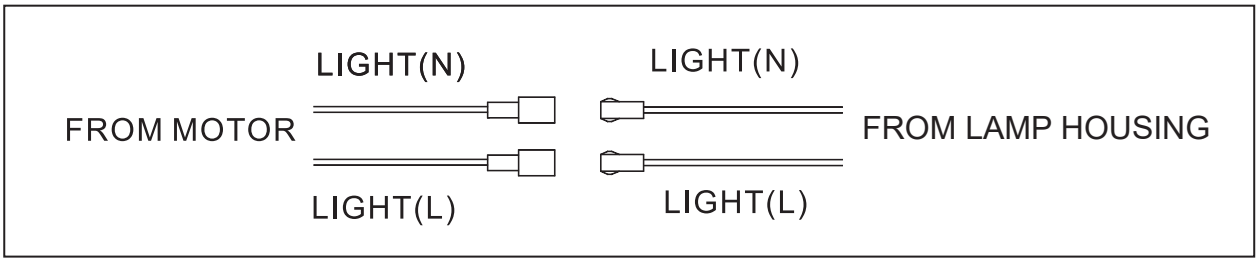

Step5 Installing the Light Bulbs

-Install the light bulb (not included).

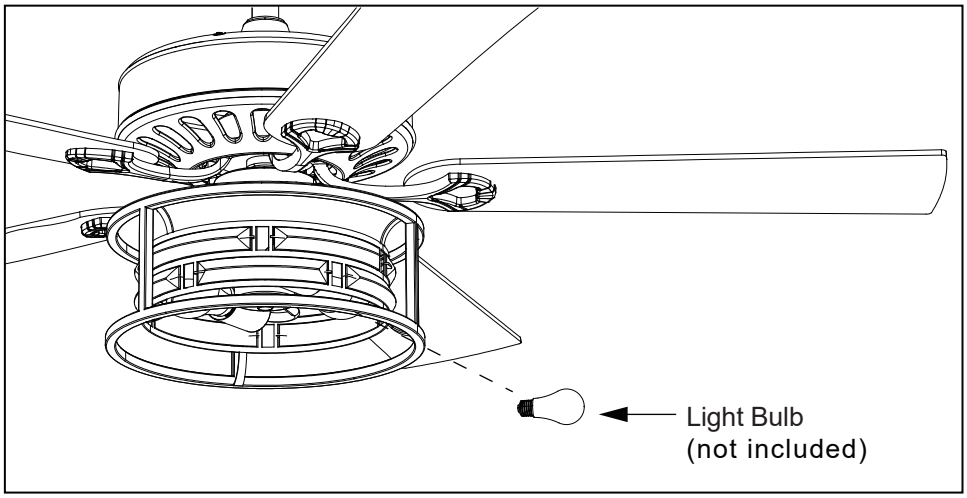

Step6 Installing the Receiver

-Place the receiver with the back facing the ceiling in the mounting bracket.

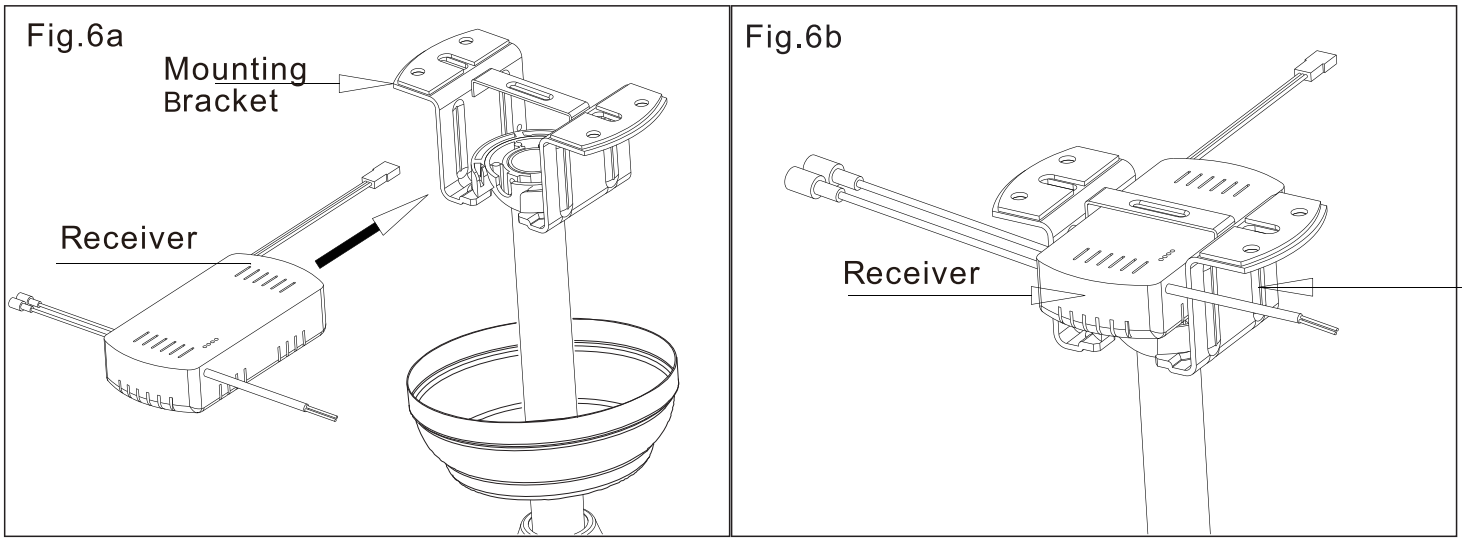

Step7 Wiring the Fan

-Follow the wiring diagram to connect the fan.

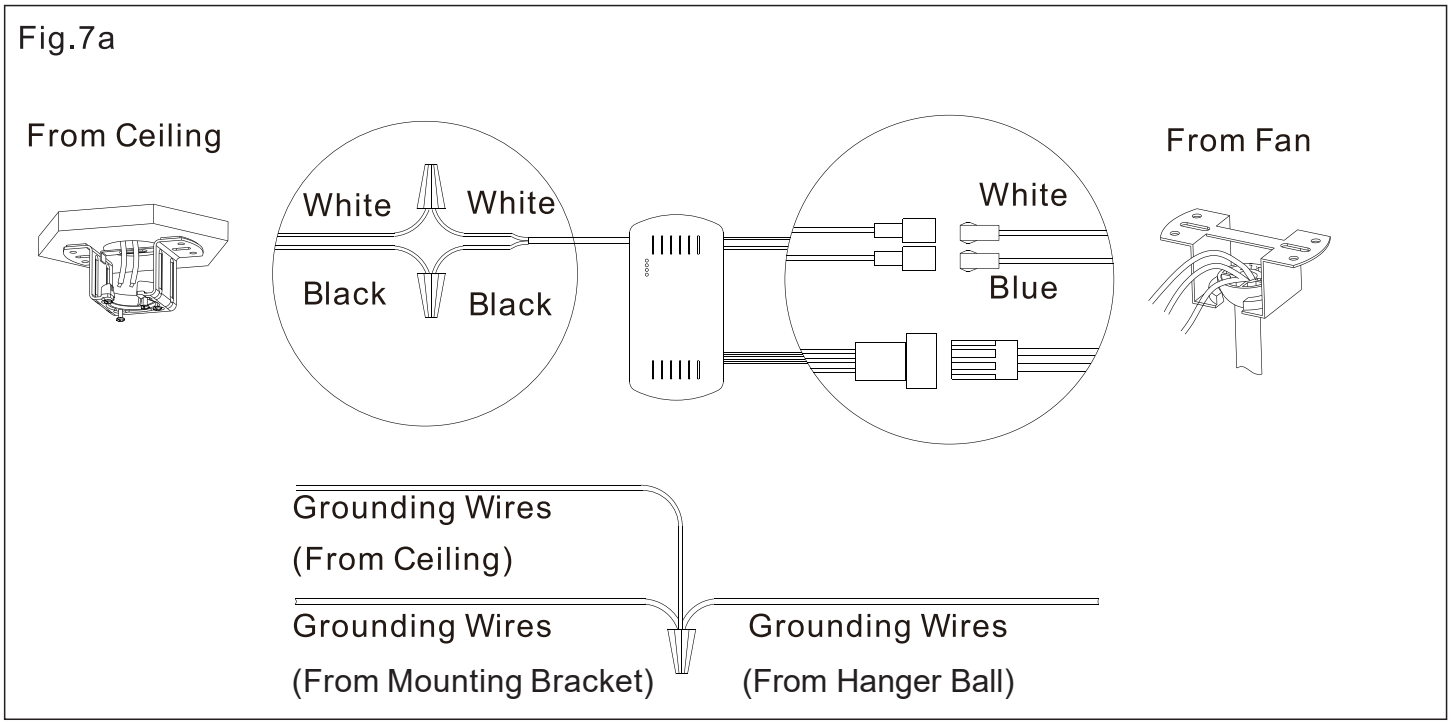

Step8 Attaching the Canopy and Canopy Cover

-Slide the canopy up to the ceiling and secure it to the mounting bracket using the provided screws. Tighten all screws firmly.

-Snap the decorative canopy cover onto the canopy.
(The cover attaches magnetically.)

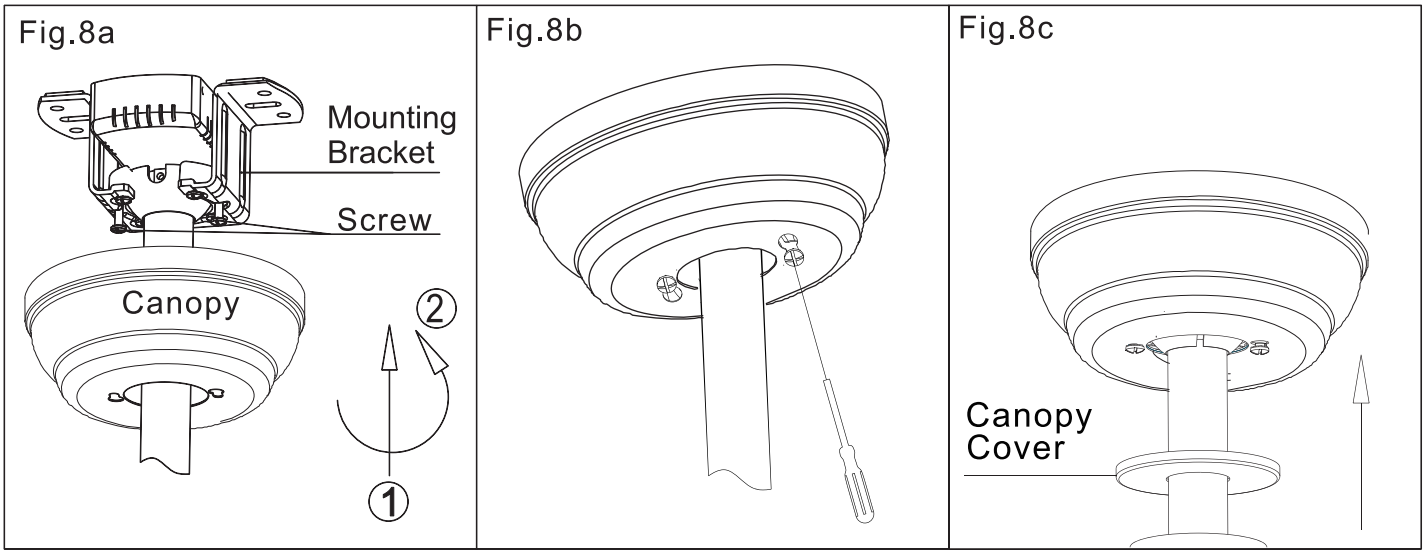

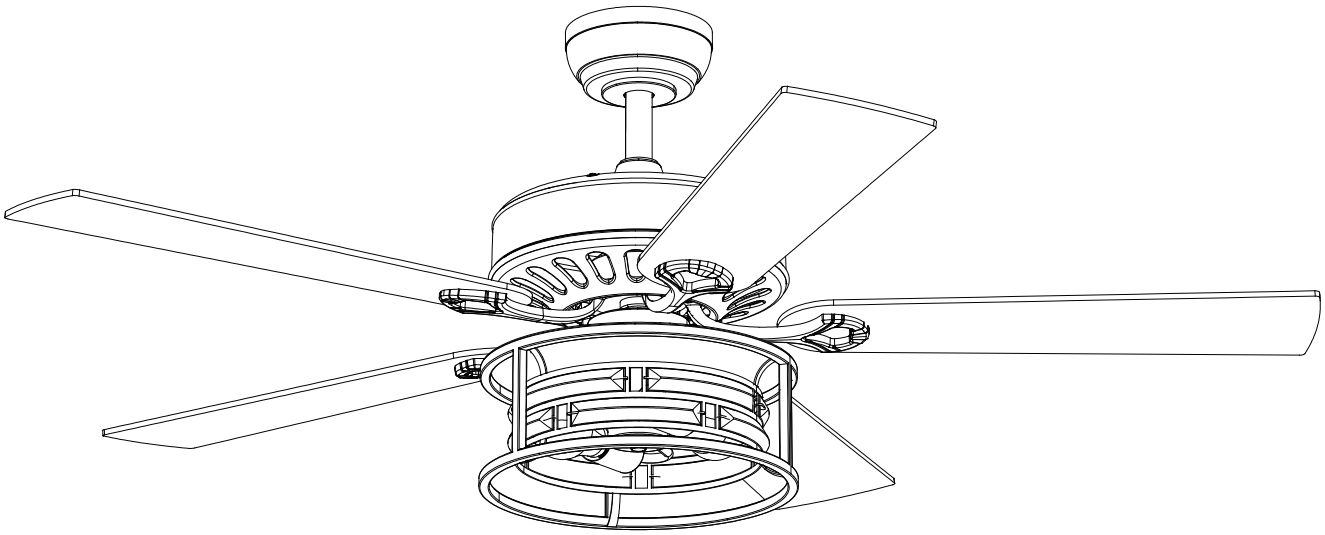

CONGRATULATIONS!
YOU HAVE COMPLETED THE INSTALLATION

FUNCTION INSTRUCTIONS FOR REMOTE CONTROL

1. Install Batteries

- Open the battery cover on the remote control.
- Insert two 1.5V AAA batteries (not included).

2. Pairing the Remote

- Turn on the power switch.
- Within 10 seconds, press and hold the Main Switch button for 3 seconds.
- If you hear a beep, the pairing process is complete.

3. Troubleshooting

If the remote does not control the fan:

- Check for nearby remote-controlled devices that may interfere, as devices with the same frequency can disrupt each other.
- Ensure the batteries are correctly installed (check polarity) and have sufficient power.

4. Timer Function

- Press the Timer button to automatically turn off the fan and light (if on) after 1 or 4 hours.

5. Installation Tip

- When installing the fan, ensure the ceiling cover does not press against the antenna or other wires, as this can damage the wires and cause a short circuit.

CAUTION: Do not operate the fan using both the remote control and wall-mounted control simultaneously.

NOTE: Replace weak batteries promptly to prevent leakage, which can damage the remote control. Dispose of used batteries properly and keep them out of reach of children.

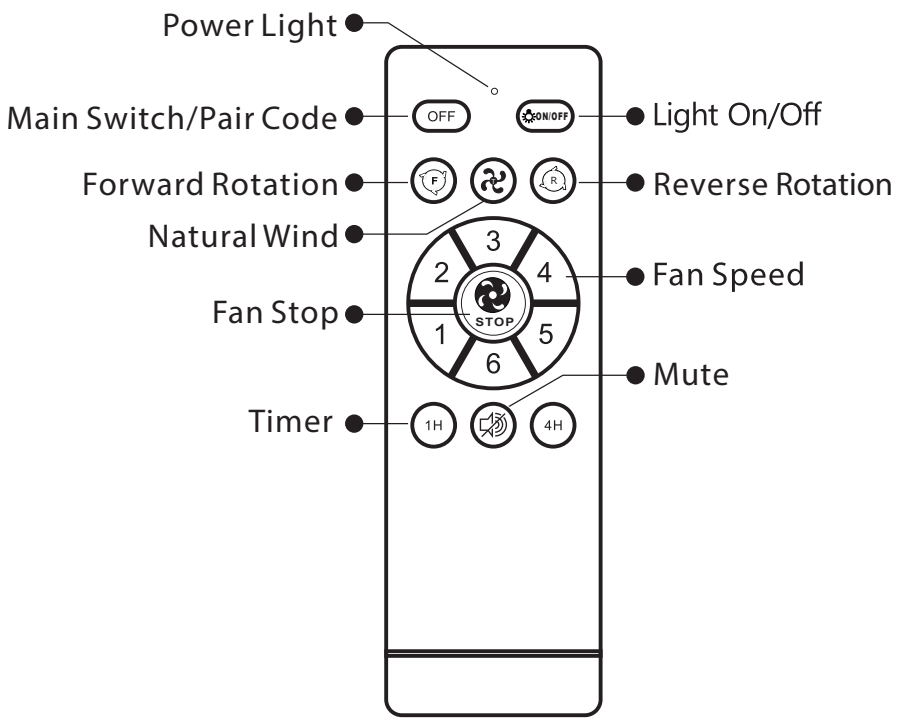

Troubleshooting Guide

If you have difficulty operating your new ceiling fan,it may be the result of incorrect assembly, installation, or wiring. In some cases these installation errors may be mistaken for defects. If you experience any faults please check this troubleshooting guide.

	Problem	Suggested Remedy
1	If fan does not work.	□ Check the main and branch circuit fuses or breakers. □ Check the line wire connections to the fan and switch wire connections in the switch housing. □ Check the battery in the remote control.
2	If fan sounds noisy.	□ Ensure all motor housing screws are snug. □ Ensure the screws that attach the fan blade bracket to the motor hub are tight. □ Ensure the wire nut connections are not rattling against each other or the interior wall of the switch housing. □ Observe whether the noise decreases after the fan has been running for 24 hours. Newly installed fans may have noise issues □ If you are using the Ceiling Fan light kit, ensure the screws securing the glassware are tight. Check that the light bulbs are also secure. □ Ensure the canopy is a short distance from the ceiling. It should not touch the ceiling. □ Ensure your outlet box is secure and rubber isolator pads were used between the mounting plate and outlet box.
3	If fan wobbles.	□ Check that all blades are screwed firmly into blade holders. □ Check that all blade holders are tightened securely to motor. □ Make sure that canopy and mounting bracket are tightened securely to ceiling junction box and junction box is mounted firmly to ceiling joist. □ Most fan wobble problems are caused when blade levels are unequal. Check this level by selecting a point on the ceiling above the tip of one of the blades keeping measure within 1/8 in. Rotate the fan until the next blade is positioned for measurement. Repeat for each blade. If all blade levels are not equal you can adjust blade levels by the following procedure. To adjust a blade tip down insert a washer(not supplied)between the blade and blade holder at the screw closest to the motor. To adjust a blade tip up insert washer(not supplied)between the blade and blade holder at the two screws farthest from the motor. □ If blade wobble is still noticeable,interchanging two adjacent (side by side)blades can redistribute the weight and possibly result in smoother operation.
4	If light does not work.	□ Check blue wire from fan to make sure it is connected to hot wire from the house. □ Check for loose or disconnected wires in fan switch housing. □ Check for loose or disconnected wires in light kit. □ Check for faulty light bulbs. CAUTION: Make sure main power is turned off before entering switch housing. □ If the fan light shuts off shortly after being switched on it may be due to excessive current demand. Turn off power to the fan and replace the light bulbs with lower wattage bulbs. Turn on power to the fan using the pull chain, wall switch, or remote control (whichever is installed on the particular fan).

Balancing Kit

The balancing kit should only be used if there is an unacceptable amount of fan wobble after completing all the steps in your Owner's Manual under "Attaching the Fan Blades."
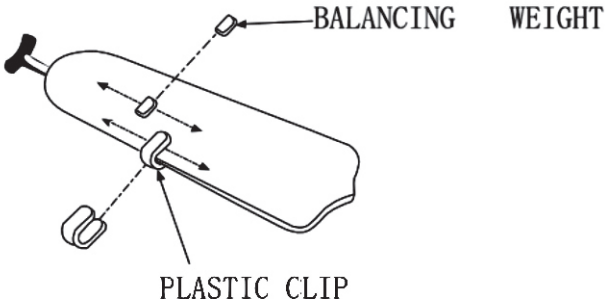
1. Turn the fan on and set the speed control to a setting where the wobble is most noticeable.
2. Turn off the fan and allow it to come to a complete stop. Select one blade and place the balancing clip on it, halfway between the blade holder and the tip of the blade on the trailing edge.
3. Turn the fan on and observe whether the wobble has increased or decreased. If needed, move the clip to another blade and retest. Repeat this process for all blades and note which blade provides the most improvement.
4. Move the clip back to the blade that showed the greatest improvement. Move the clip inward and outward on this blade and operate the fan to find the position where the clip gives the greatest improvement.
5. Remove the clip and install a balancing weight on the top of the blade, along the centerline, near where the clip was positioned.
6. If the fan wobble problem has not been corrected you can try to improve the balancing further by using the balancing clip and additional weights.