Sonu Side Table

Assembly Instructions

(A)	(B)	(C)	(D)	(E)	(F)
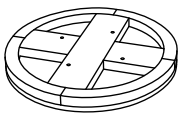	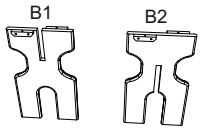	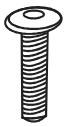	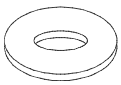	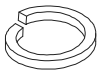	
1 piece	2 pieces	6x30mm 4 pieces	8x16mm 4 pieces	8x16mm 4 pieces	4mm 1 pieces

(1)

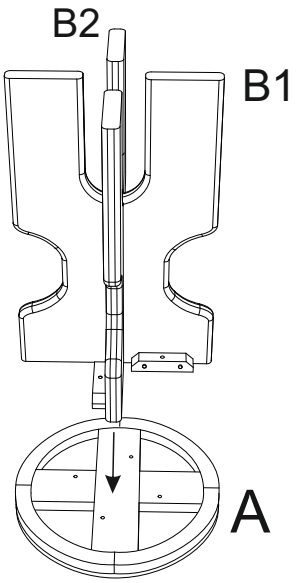

(2)

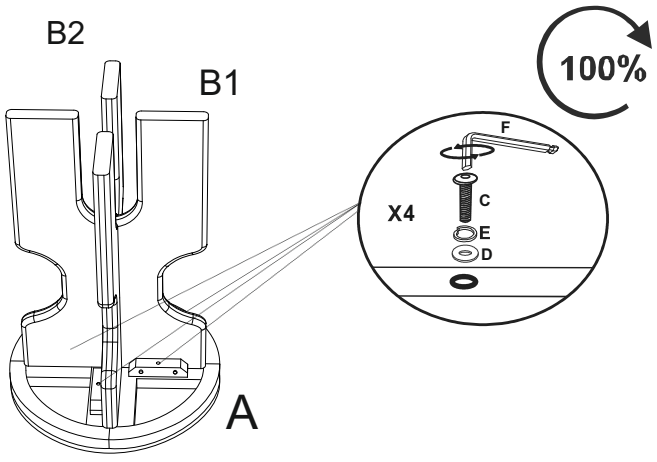

(3)

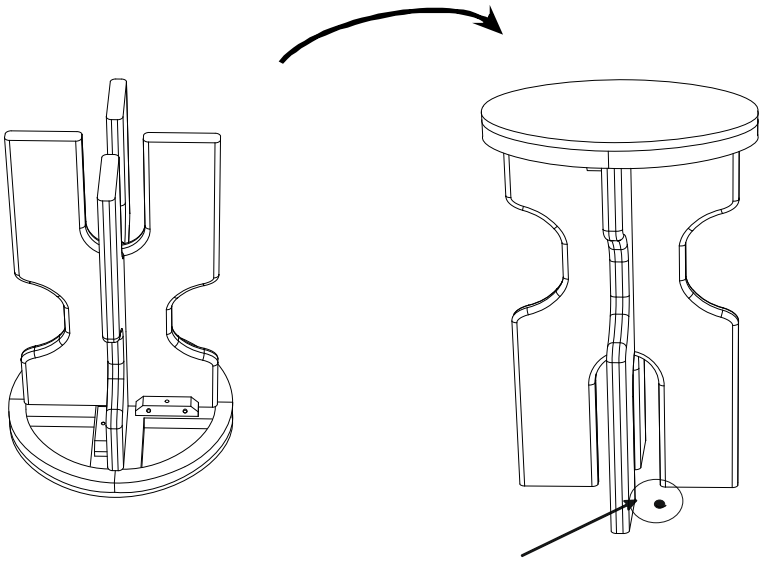

NOTE : Levelers can be used for adjustment if needed.