INSTALLATION MANUAL

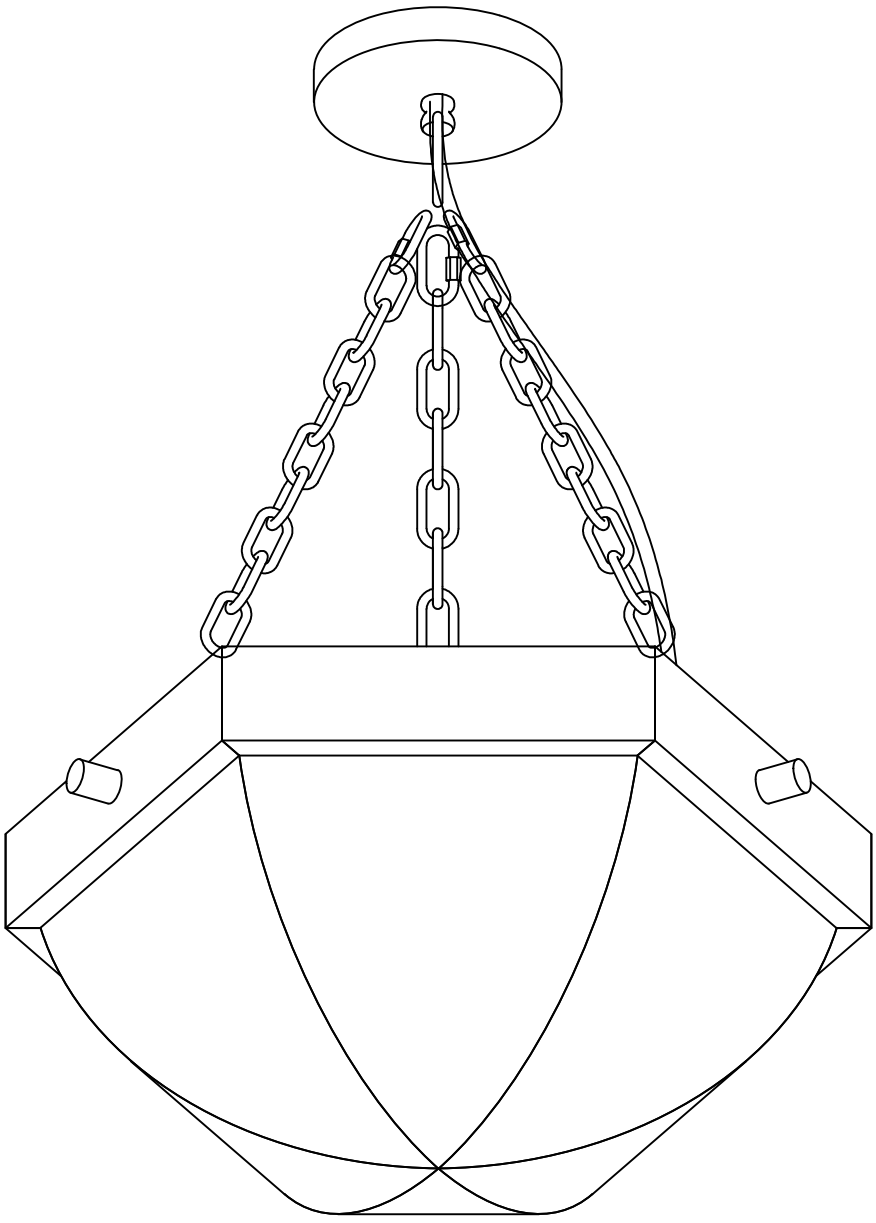

Open the box, and take out all the accessories you will get the following items.

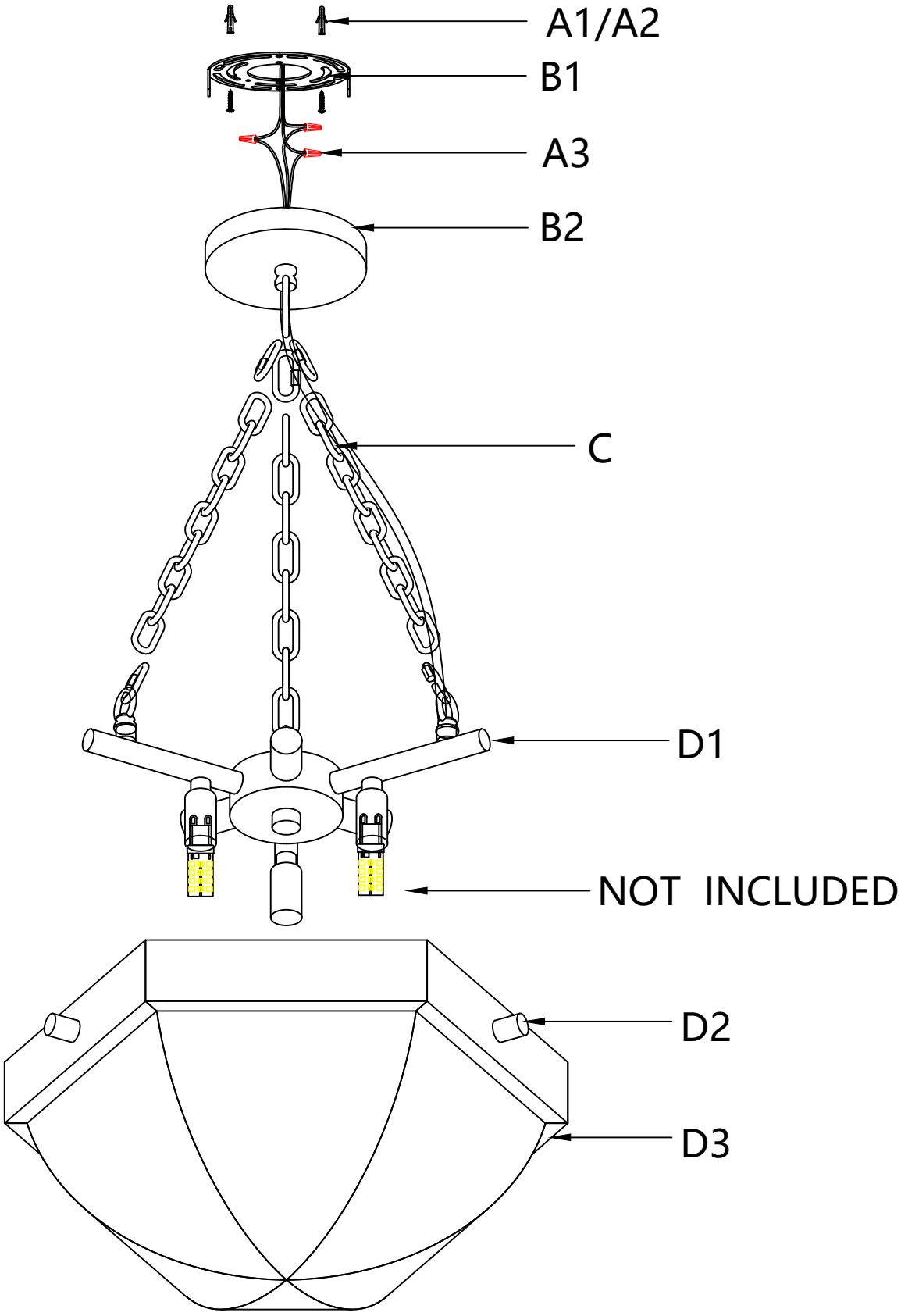

Accessories list

 A1*4	 A2*4	 A3*3
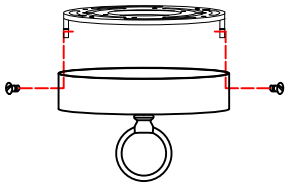 B*1	 C*3	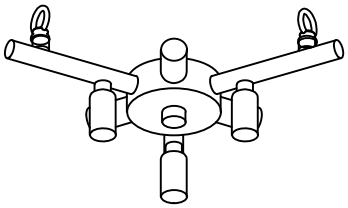 D*1
 D2*3	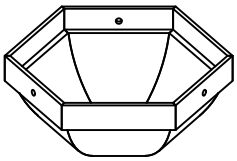 D3*1	

NO.	Specification Name	QT
A1	Expansion plug	4
A2	Self-tapping screw	4
A3	Wire Connector	3
B	Ceiling Canopy	1
C	Chain	3
D1	Chandelier Body	1
D2	Cap	3
D3	Lampshade	1

After-sales service E-mail address :support@wansilight.com

Installation Video and Product Website:

Scan the QR Code to Watch:

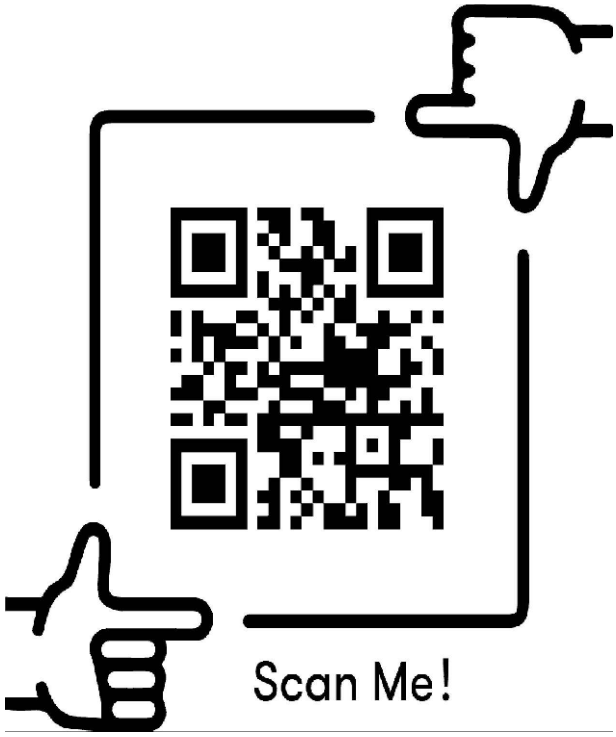

SteP 1

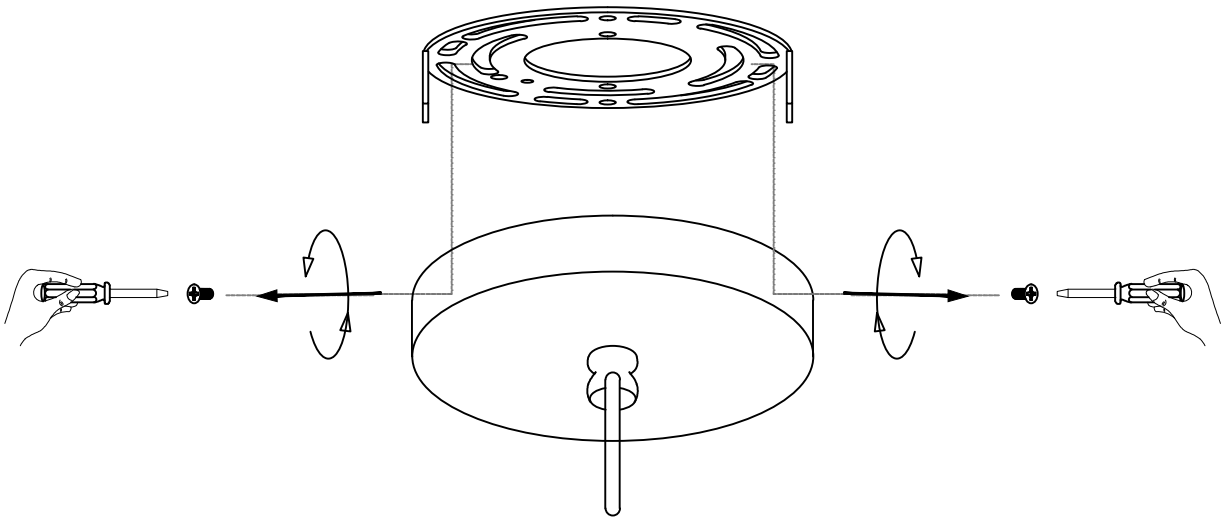

Loosen the screws cap of the hanging plate to take out the hanging plate

SteP 2

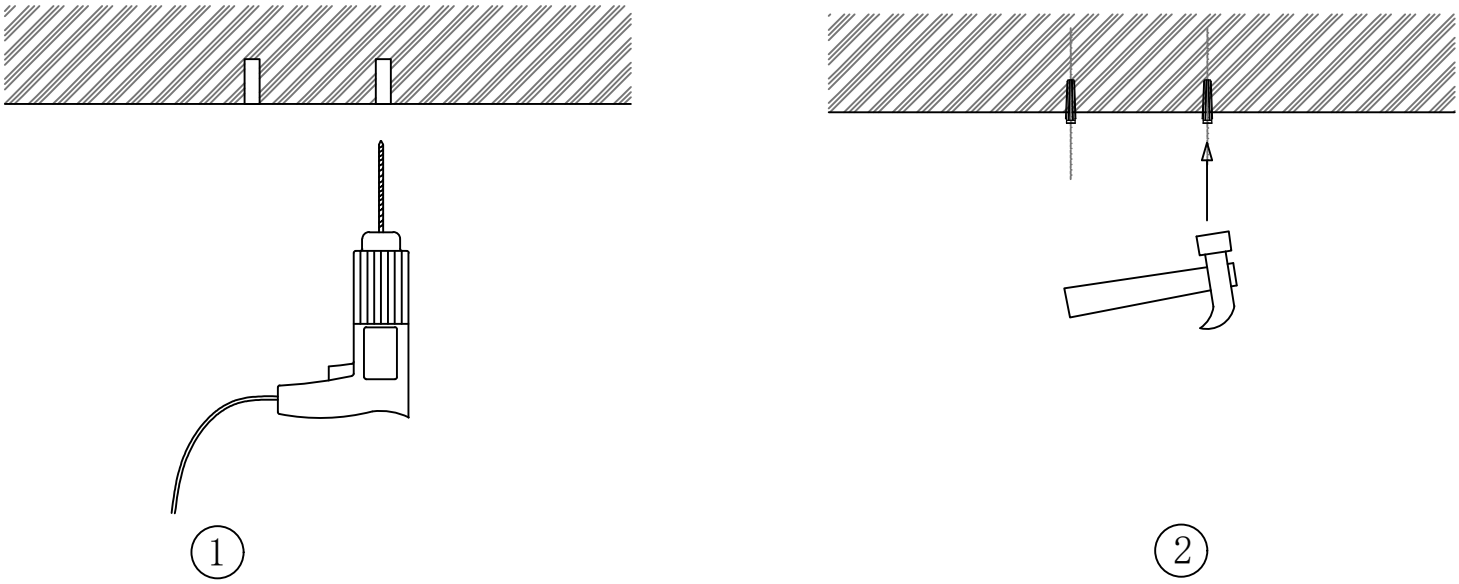

SteP 3

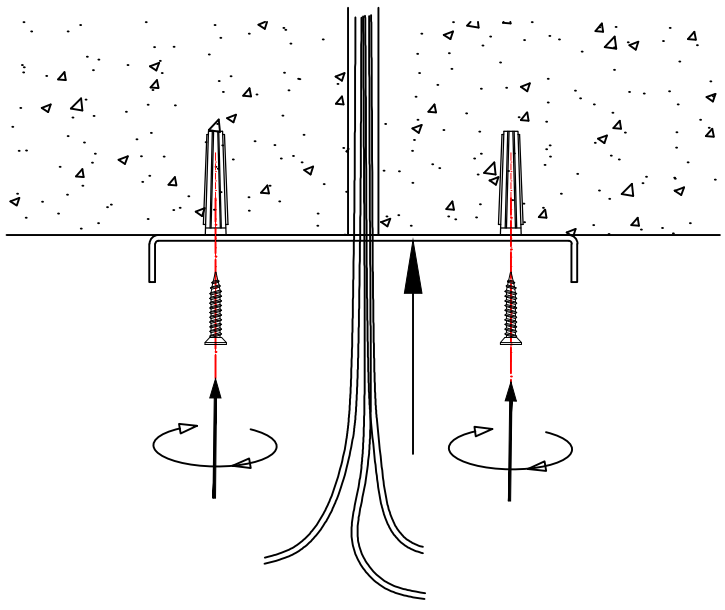

SteP 4

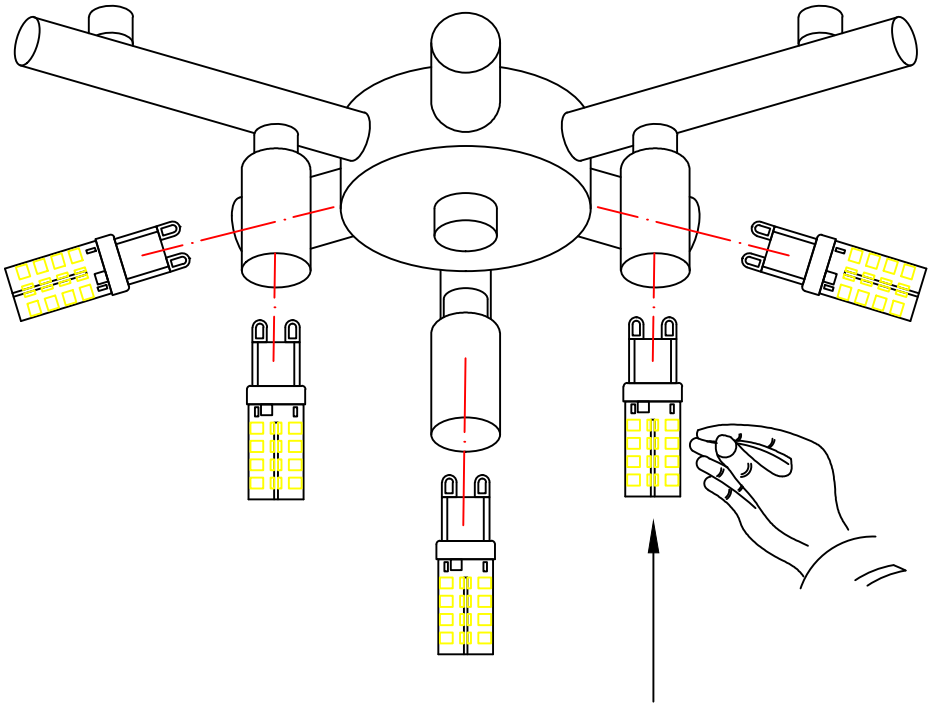

SteP 5

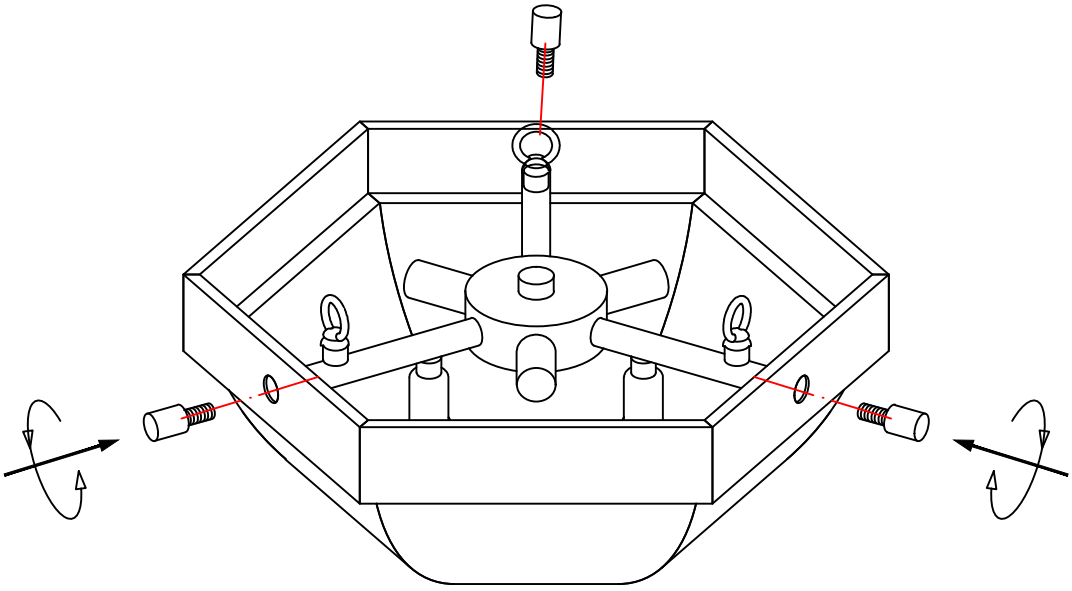

SteP 6

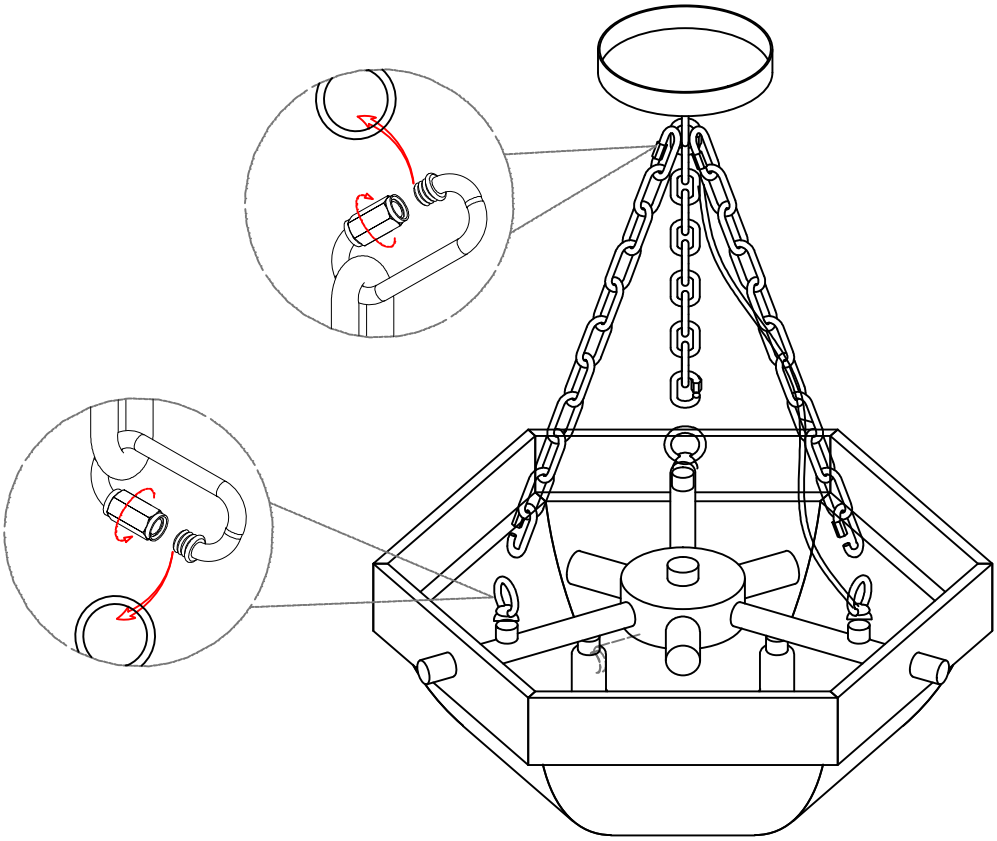

SteP 7

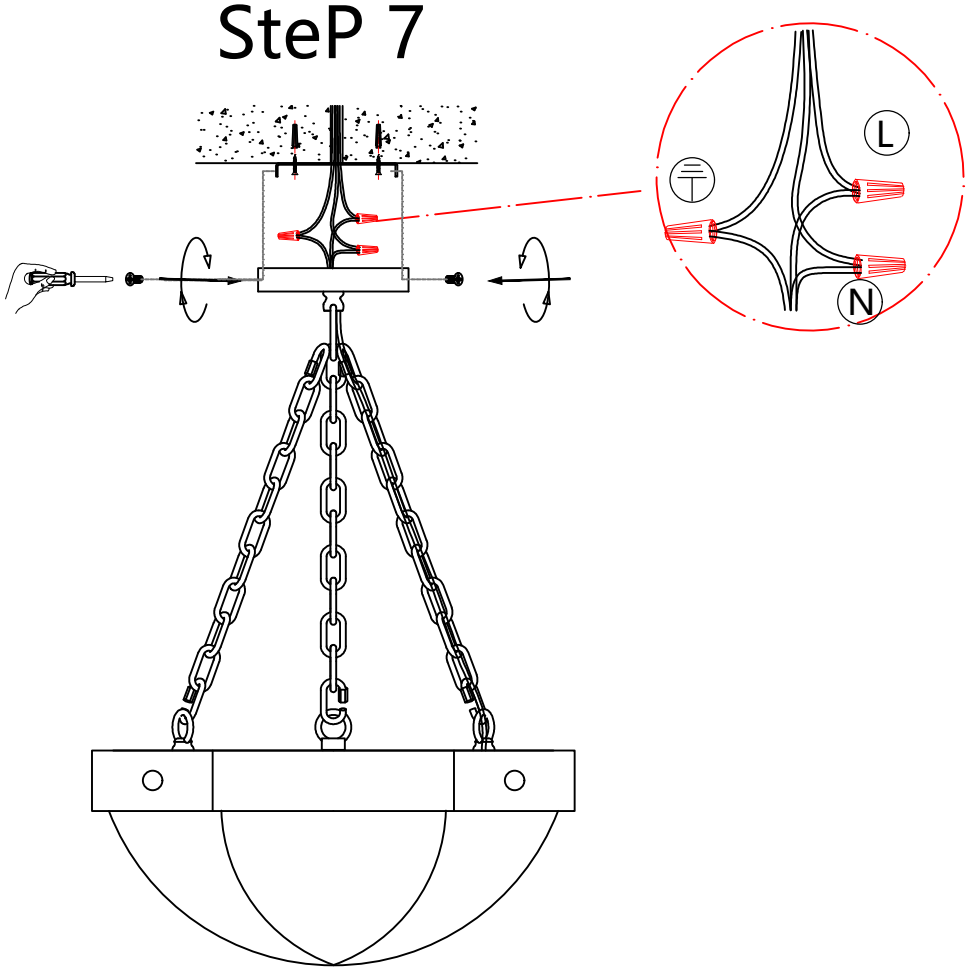

No matter what problems or questions you encounter during the installation or use of the chandelier, please feel free to contact us, we will reply to you within 24 hours and quickly solve or answer for you!
When you leave a message to us online, please leave your order ID and case details. The more detailed and accurate descriptions you provide, the faster and more accurate solutions we will offer!

⚠ SAFETY INSTRUCTIONS

These instructions are provided for your safety. It is very important that you read the instructions completely before starting the installation of your fixture.
1.We recommend installation by a licensed electrician.
2.This fixture require G9 bulbs(NOT INCLUDED) and bulb rated wattage: Max 3W.Low wattage LED bulbs are recommended. To avoid risk of fire, do not exceed the recommended wattage.
3.If any special control devices are used with this fixture, follow the instructions carefully to assure full compliance with N.E.C. requirements. If there are any problems, contact a qualified electrical contractor.
4.Please ensure that you shut off the main electrical supply before installation, changing bulbs or cleaning light fixture.

⚠ WARNINGS

This is not a toy and the product has no play value.
Keep at least 3 ft away from cribs, bassinets, and toddler beds.
Keep out of reach of children under 3 years old.

PREPARATION

1.Please prepare your purchased G9 bulbs in advance.
2.Please keep the installation place clean and tidy to avoid missing tiny accessories.