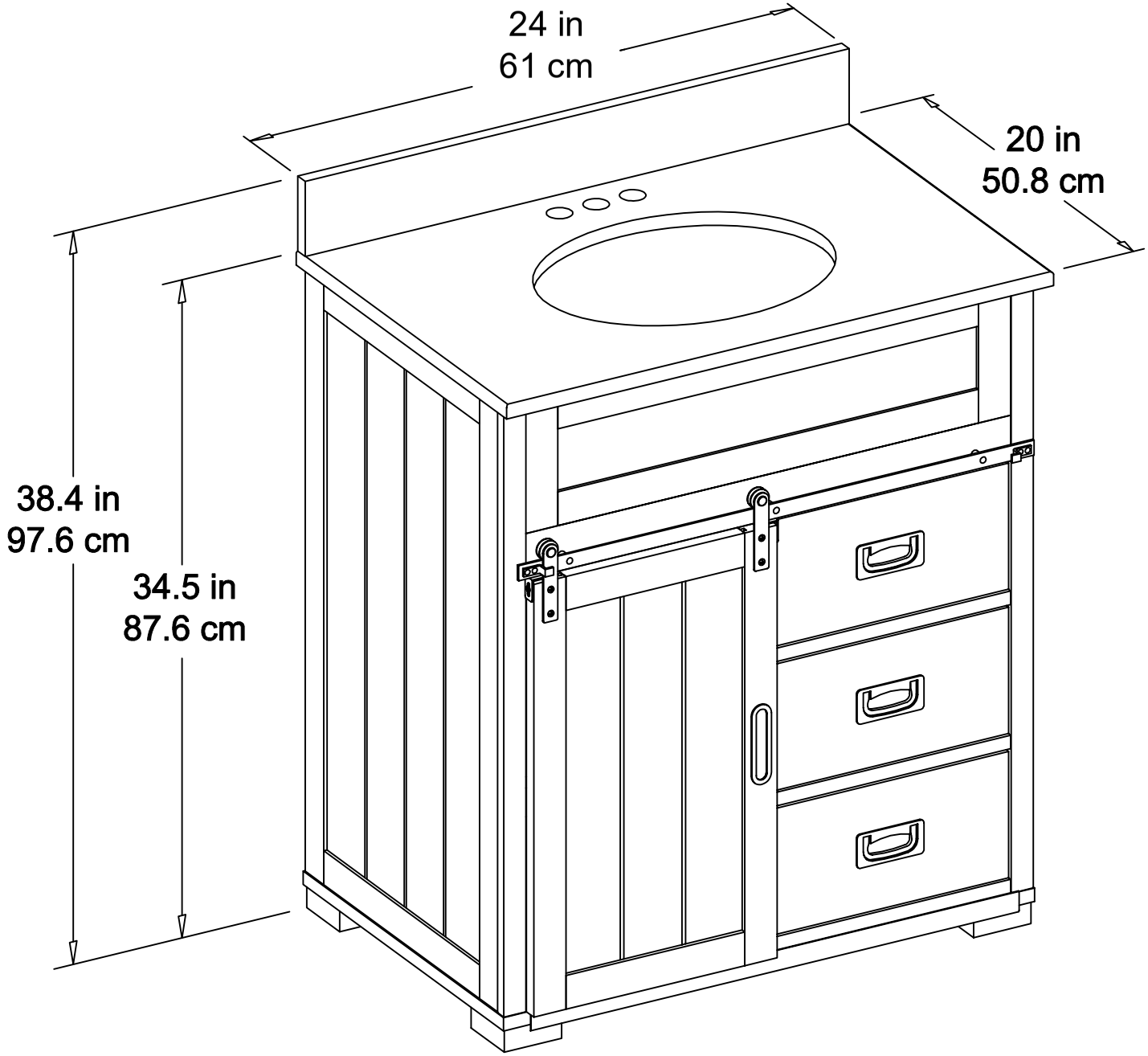
24 in
61 cm
20 in
50.8 cm
38.4 in
97.6 cm
34.5 in
87.6 cm