Dimension Drawing

CLF-BVI15I-1.0-US

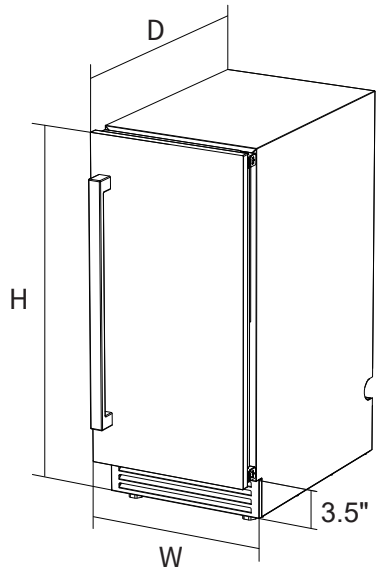

W: 14.8" D: 23.6" H: 33.9"

Installation example: Model CLF BVI15I

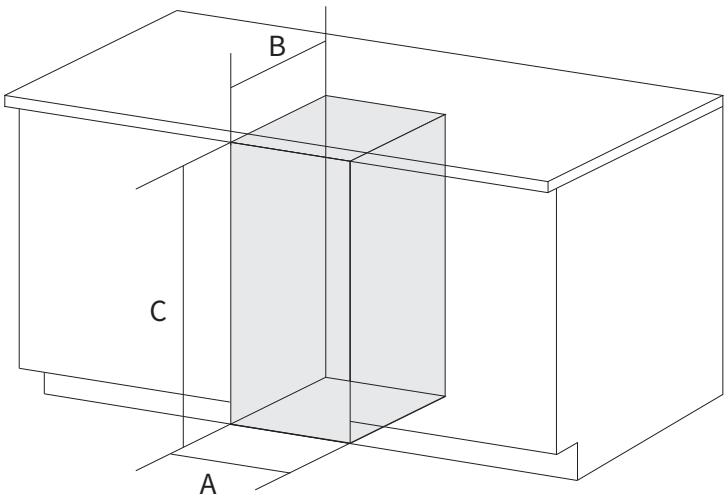

A: 15.2" B: 24.4" C: 34.3"

CLF-PRDVI15I-1.0-US

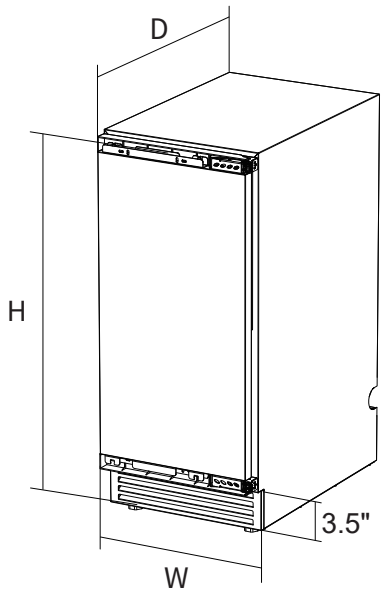

W: 14.8" D: 22.9" H: 33.9"

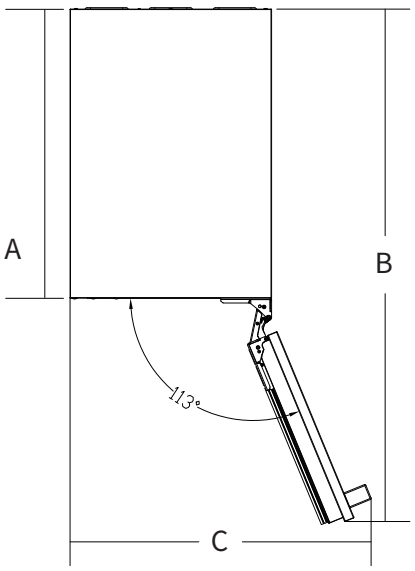

A: 21.4" B: 37.7" C: 22.2"