INSTALLATION & USER MANUAL

CEILING FAN WITH LIGHT

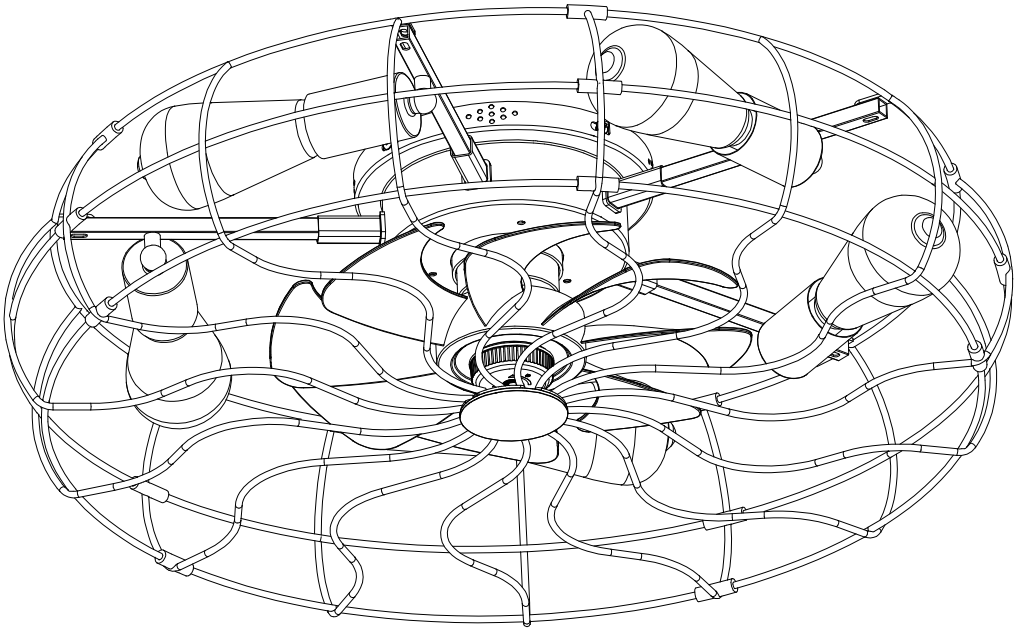

ITEM # 33084-XL

Customer Service: support@ceilingfanhelp.com

Table of Contents

Table of Contents.....2
Safety Information.....2
Dimension Reference.....3
Exploded View.....3
Hardware Included.....4
Fan Parts Included.....4
Installation Instructions.....5-9
Remote Control Operation.....10
Troubleshooting Guide.....11

Safety Information

READ AND SAVE THESE INSTRUCTIONS.

1.To reduce the risk of electric shock.ensure that the electricity has been turned off at the circuit breaker or fuse box before you begin.

2.All wiring must be in accordance with the National Electrical Code"ANSI/NFPA 70" and local electrical codes.Electrical installation should be performed by a qualified licensed electrician.

3.Make sure the outlet box and its support structure are securely mounted and rated to safely support a fan weighing up to 35 lbs (15.9 kg). Use only UL-listed outlet boxes that are clearly marked “Acceptable for Fan Support of 35 lbs (15.9 kg) or less.” If you are unsure about safety or compatibility, please consult a qualified electrician.

4.Do not place objects in the path of the blades.

5.To clean the fixture.turn off the power. wait for it to cool.and wipe the fixture with a clean dry soft cloth.

6.After making electrical connections. spliced conductors should be turned upward and pushed carefully up into the outlet box.The wires should be spread apart with the grounded conductor and the equipment grounding conductor on one side of the outlet box and ungrounded conductor on the other side of the outlet box.

7.All screws must be checked and re-tightened where necessary before installation.

WARNING:To reduce the risk of electrical shock or fire,do not use this fan with any solid-state fan speed control device. It will permanently damage the electronic circuitry.

WARNING:All wiring must be in accordance with the National Electrical Code (ANSI/NFPA 70) and local electrical codes.Installation must be performed by a qualified, licensed electrician.

WARNING:To reduce the risk of personal injury,do not bend the blade brackets when installing the brackets balancing the blades, or cleaning the fan.Do not insert objects.

WARNING:To reduce the risk of fire, electric shock or personal injury,mount to outlet box marked "acceptable for fan support of 35 lbs(15.9kg) or less"and use screws provided with the outlet box.

WARNING:To avoid possible electrical shock.turn the electricity off at the main fuse box before wiring.

WARNING:To reduce the risk of electrical shock, this fan should not be installed with an isolating wall control or switch, as it may cause incompatibility issues.

WARNING:To reduce the risk of personal injury,use only the screws provided with the outlet box.

WARNING:Please use carefully when working around or cleaning the fan to avoid injury or damage to the fan.

WARNING:The fan must be mounted with a minimum of 7.5 feet (2.3 Meter) clearance from the trailing edge of the blades to the floor.

WARNING:Changes or modifications not expressly approved by the party responsible for compliance could void the user's authority to operate the equipment.

Dimension Reference

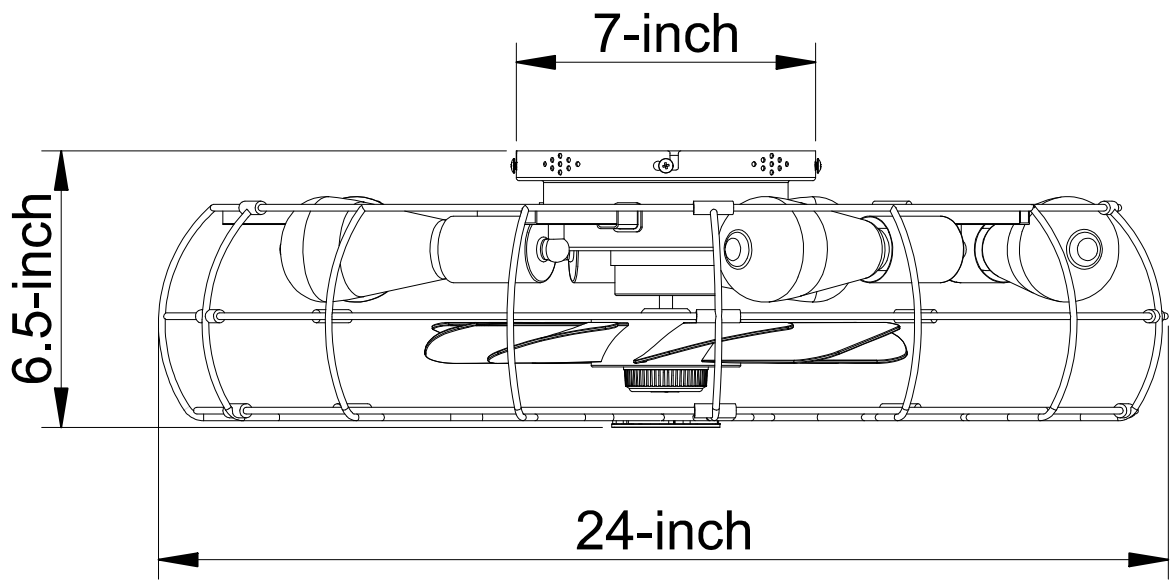

Exploded View

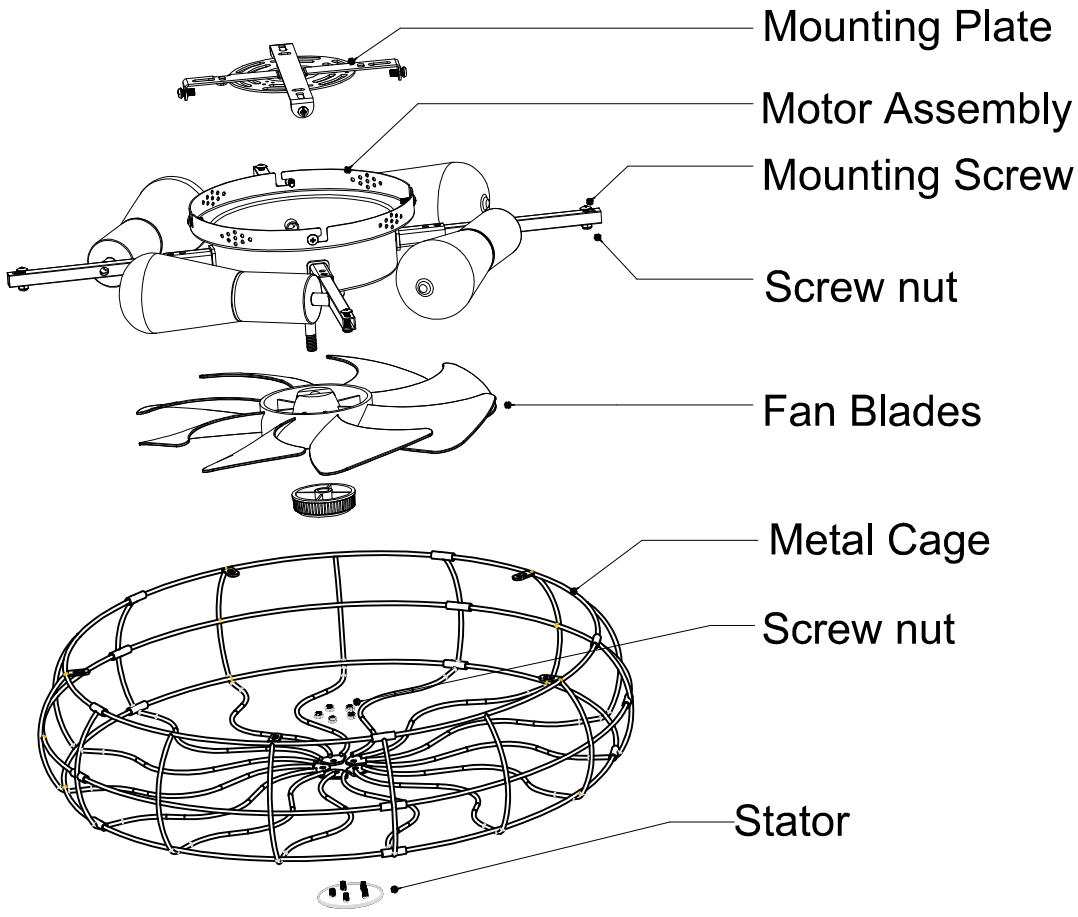

Hardware Included

1  Wire Nut	2  J-box Screw	3  Washer	4  Self-tapping Screw

Hardware Package	Quantity
1.Wire Nut	3
2.J-box Screw	2
3.Washer	4
4.Self-tapping Screw	4

Fan Parts Included

1 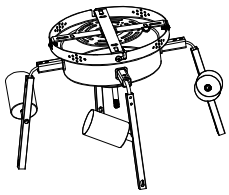 Ceiling Fan	2 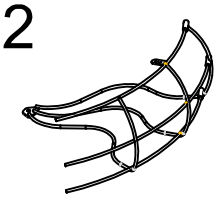 Metal Cage	3  Remote Control	4  Remote Control Wall Plate

5 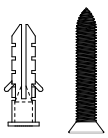 Remote Control Accessory Pack	6  Cage Screw	7 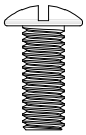 Mounting Screw	8  Screw Nut	9  Stator

Item Name	Quantity
1.Ceiling Fan	1
2.Cage	5
3.Remote Control	1
4.Remote Control Wall Plate	1
5.Remote Control Accessory Pack	2
6.Short Screw	11
7.Long Screw	6
8.Screw Nut	11
9.Stator	1

Bulb:E26 base(not included)
Recommend:ST64/ST58/T45

Energy Saving Usage

Ceiling fan performance and energy savings rely heavily on the proper installation and use of the ceiling fan.Here are a few tips to ensure efficient product performance.

Choosing the Appropriate Mounting Location

Ceiling fans should be installed or mounted in the middle of the room and positioned at least 7.5ft above the floor and 18 inches away from the walls.If the ceiling height allows, it is recommended to install the fan 7.5~9ft above the floor to achieve optimal airflow.

Using the Ceiling Fan Year Round

Summer Season:Use the ceiling fan in the counterclockwise direction to push a breeze downward and make the room feel cooler.

Winter Season:Reverse the motor and operate the ceiling fan at a low speed in the clockwise direction to circulate warm air evenly and make the room more comfortable.

Electrical and Structural Requirements

Your new ceiling fan will require a grounded electrical supply line of AC 110-130V/60Hz and a 15 Amp circuit. According to electrical codes,it is necessary to use a fan-rated outlet box to support the additional weight and motion associated with a ceiling fan. A fan-rated box will be clearly labeled as such and is typically designed to support ceiling fans weighing up to 35 pounds.
Fan-rated outlet boxes are available in various ratings and designs.It is essential to ensure that the rating of your ceiling fan outlet box meets the requirements for the specific ceiling fan you are installing.

If your fan is to replace an existing light fixture, turn power off at the main fuse box and remove the existing light fixture.

WARNING

To ensure safety and prevent potential electrical shock,it is not sufficient to simply turn off the wall switch.Prior to wiring,make sure to turn off the electricity at the main fuse box.All wiring should be done in accordance with national and local electrical codes.Additionally,it is important to properly ground the ceiling fan as a precautionary measure against possible electrical shock.Following these guidelines will help ensure the safe installation and operation of your ceiling fan.

WARNING

Do not use a variable(rheostat)wall controller or dimmer switch to operate this fan.Doing so can cause damage to the ceiling fan's remote control unit.It is recommended to only use the provided remote control.

Installation Instructions

Fig.1

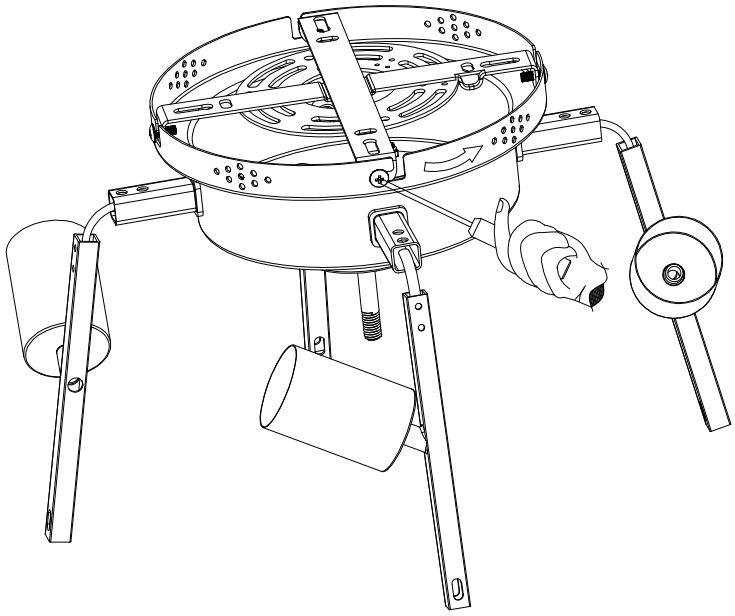

1.Loosen the four canopy screws(do not take off) and then twist counterclockwise to remove the mounting plate.

Fig.2

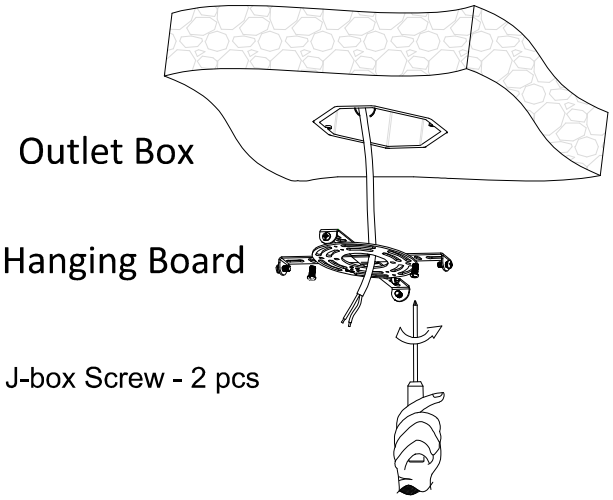

Solid Wood Structure

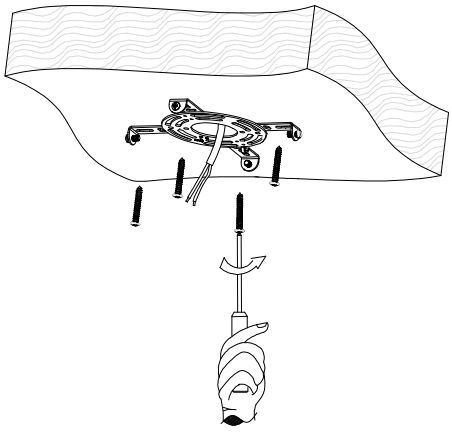

Self-tapping Screw - 4 pcs

2.Install the bracket to the junction box or wood ceiling according to user's ceiling situation.

Drill hole and use expansion bolt when installing to concrete ceiling.

Installation Instructions

Fig.3

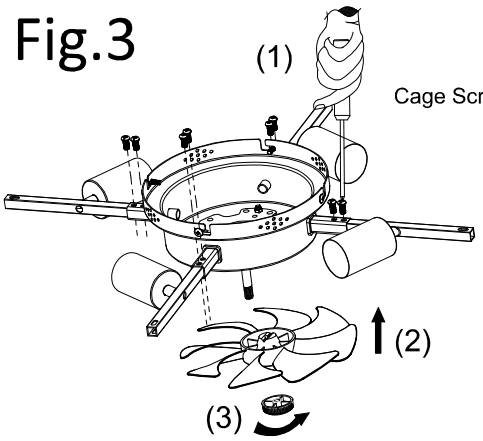

Fig.4

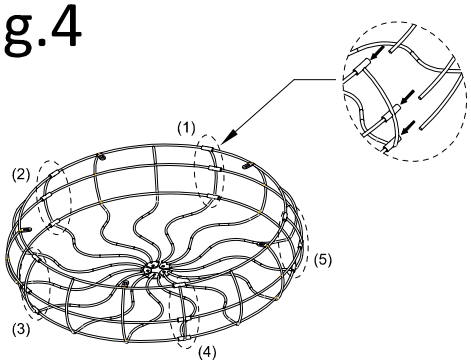

Fig.5

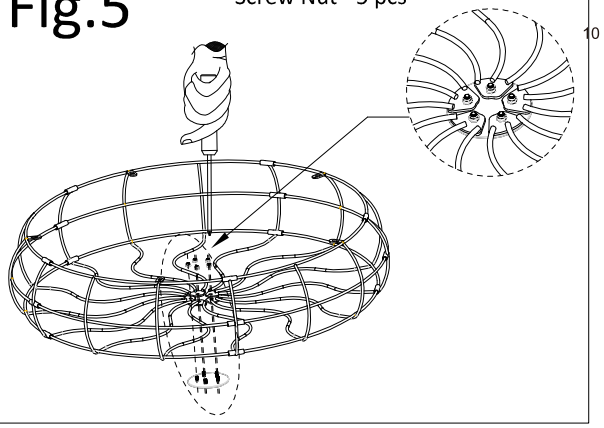

Fig.6

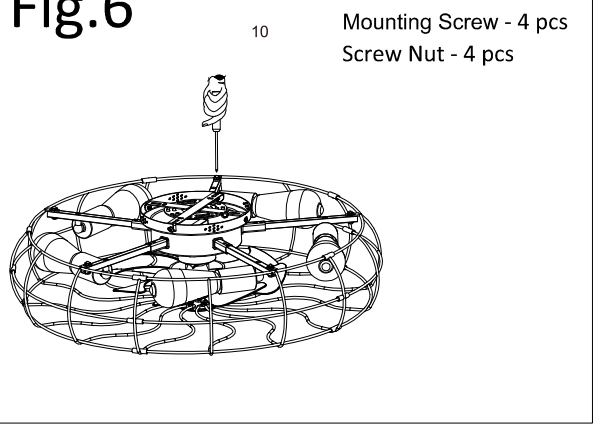

3.Insert the lamp post on one side of the lamp head into the reserved lamp post on the base, and secure it with screws. Then, install the fan blades onto the motor and tighten the fan blade cover.

4.Move inward while aligning the edges of the frame sections.

5. Attach the connecting component to the knockdown frame, then assemble the lamp frame using five side screws and connect the five parts of the frame together using five bottom screws and nuts.

When installed one side of the frame,do not tighten the screws,you need to give space for the screws to screw into the hole. once all 5 screws are installed in,tighten them. same as above for the other side.

6.Fix the motor host and the frame with 4 screws and nuts.

Installation Instructions

Fig.7

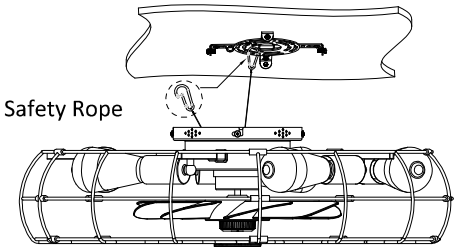

Fig.8

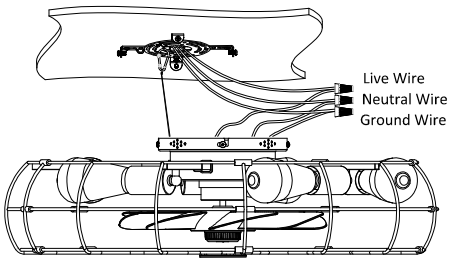

7.Use the safety rope(pre-installed)to hang the lamp to the bracket.
8.Wiring:Electrical wiring, use a safety rope to hang the fan body.
Connect the "Neutral wire"(white wire)from ceiling to the white wire.
Connect the "live wire"(black wire)from ceiling to the black wire.
Connect the "Ground wire".
(green to yellow/green or bare) from ceiling to the yellow/green wire.

Fig.9

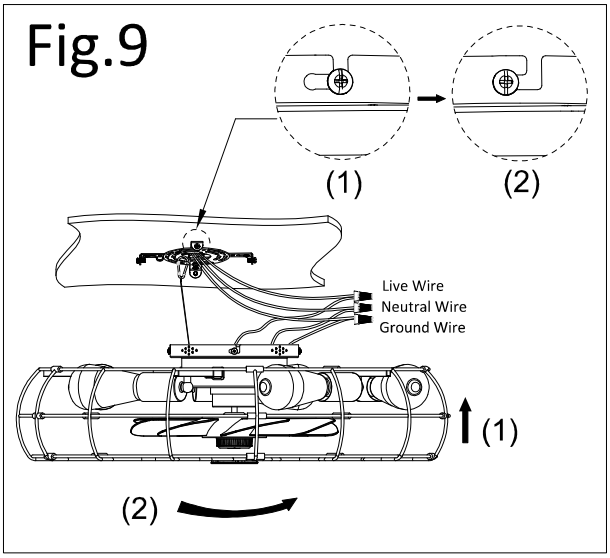

Fig.10

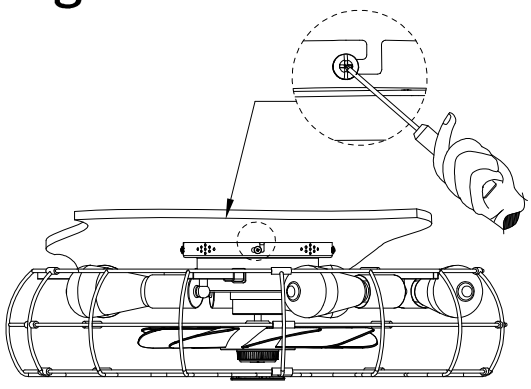

9.Align the grooves on the canopy with the screws on the bracket, and then push the fixture upwards.
10.Rotate the canopy counterclockwise and tighten the four screws using a screwdriver.

Remote Control Operation

433 MHZ frequency controller

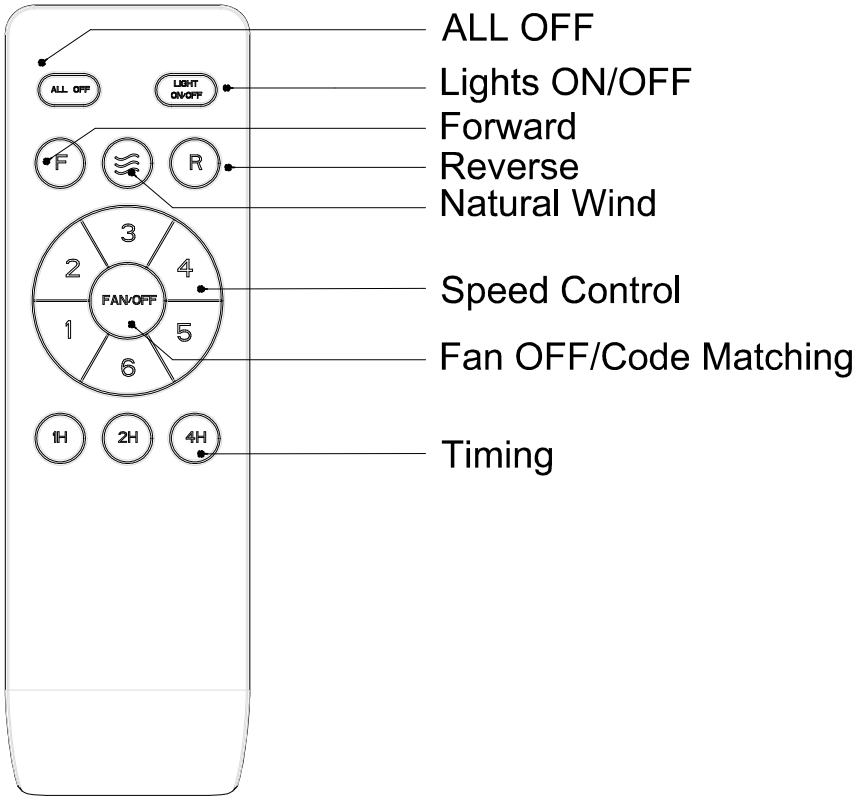

Battery Type: AAA 1.5V * 2 (Not Included)

Code Matching
After turning on the power switch,press and hold the Fan Off button within 5 seconds to pair.
The fan will turn off if pairing is successful.
If not,turn off the power switch, wait for 5 seconds,then turn it back on and try again.
Repeat if needed.

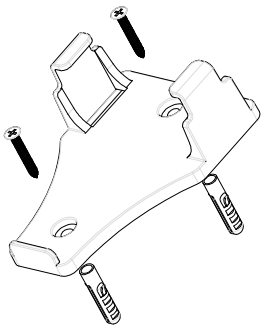

Remote Control
Wall Plate

Remote Control
Accessory Pack

Installing wall plate

Attach wall plate using the two screws and two plastic anchors provided in remote control accessory pack.

Troubleshooting Guide

If Fan Does Not Start	1.Check the main and branch circuit fuses or circuit breakers. 2.Ensure that the wall control is turned ON.do not use a dimmer switch. 3.Check the line wire connections to the fan and switch wire connections in the switch housing. CAUTION:Make sure to turn off the main power before making any electrical connections.
If The Fan Sounds Noisy	1.Make sure all screws in the motor housing are snug(not overtightened). 2.check that wire connectors in the switch housing are not rattling against each other or the interior wall of the switch housing.CAUTION:Turn off the main power before entering the switch housing. 3.Ensure that the screws are tight. Make sure the light bulb is securely fastened in the socket and not touching the lamp frame or blades. 4.Note that some fan motors are sensitive to signals from Solid State variable speed controls.DO NOT USE a Solid State variable speed control. 5.ALLOW a "break-in"period of 24 hours.Most noises associated with a new fan will disappear after this period.
If Fan Wobbles	1.Check that all blades are screwed firmly into blade holders. 2.Make sure that the canopy and mounting plate are tightened securely to the ceiling junction box, and the junction box is mounted firmly to the ceiling joist. 3.Ensure the concave groove of the hanger ball is positioned on the hanger lug of the mounting bracket.
If Light Does Not Work	1.Check the black wiring of motor to receiver,and receiver to AC input. 2.Check loose or disconnected wires in the fan switch housing. 3.check loose for light bulbs. 4.check faulty light bulbs, make sure the light bulb is AC120V and E26 medium base.. CAUTION:Make sure the main circuit is turned off before entering the switch housing.
Remote Does Not Work	1.Battery out of power or not installed correctly; replace with new AAA batteries and ensure they are installed correctly. 2.Remote controller not paired, pair again with the fan.