KOHLER®

Betello®
left-hand trip lever
K-21261-L

Features
- Left-hand trip lever
- For use with the K-20197 and K-20198 Betello™ toilets

Material
- Premium metal construction for durability and reliability
- KOHLER finishes resist corrosion and tarnishing



ADA | **CSA B651** | **OBC**

Codes/Standards
ADA
ICC/ANSI A117.1
CSA B651
OBC

KOHLER® One-Year Limited Warranty
See website for detailed warranty information.

Available Colors/Finishes
Color tiles intended for reference only.

Color	Code	Description
	CP	Polished Chrome
	SN	Vibrant® Polished Nickel
	BN	Vibrant® Brushed Nickel
	BV	Vibrant® Brushed Bronze
	BL	Matte Black
	2MB	Vibrant® Brushed Moderne Brass
	BGP	Vibrant Brushed Graphite
	TT	Vibrant Titanium
	DR	Deep Bronze

KOHLER®

Betello®

left-hand trip lever

K-21261-L

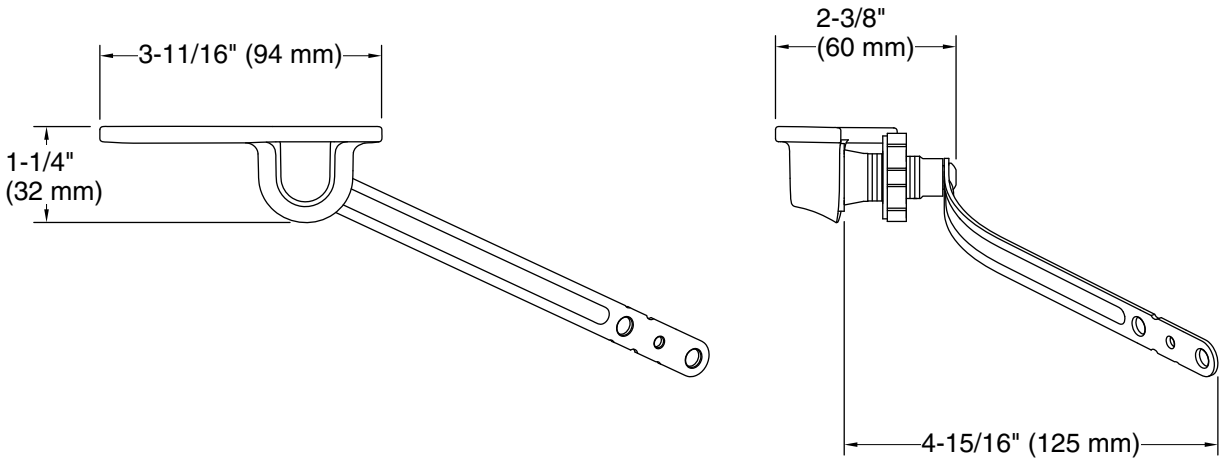

Technical Information

All product dimensions are nominal.

Material: Metal

Notes

ADA, OBC, CSA B651 compliant when installed to the specific requirements of these regulations.