INSTALLATION
Product Manual

Version: 250022US-01-25A-AA

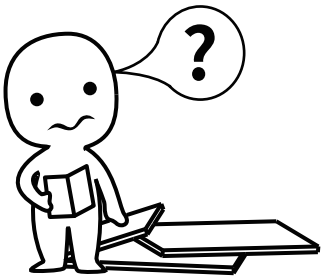

IMPORTANT INFORMATION!

please read the entire manual before starting to assemble and/or using this product.follow the manual thoroughly and keep it for further reference.

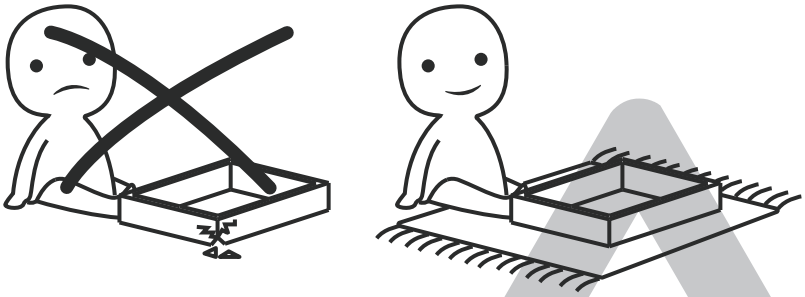

AVOID SCRATCHES!

In order to avoid scratching this furnuture should be assembled on a soft layer-could be a rug.

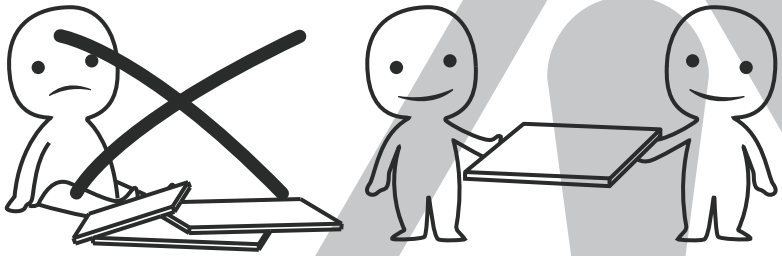

IMPROVE EFFICIENCY !

Try to find a partner to install with you, which can speed up the installation efficiency and shorten the time.

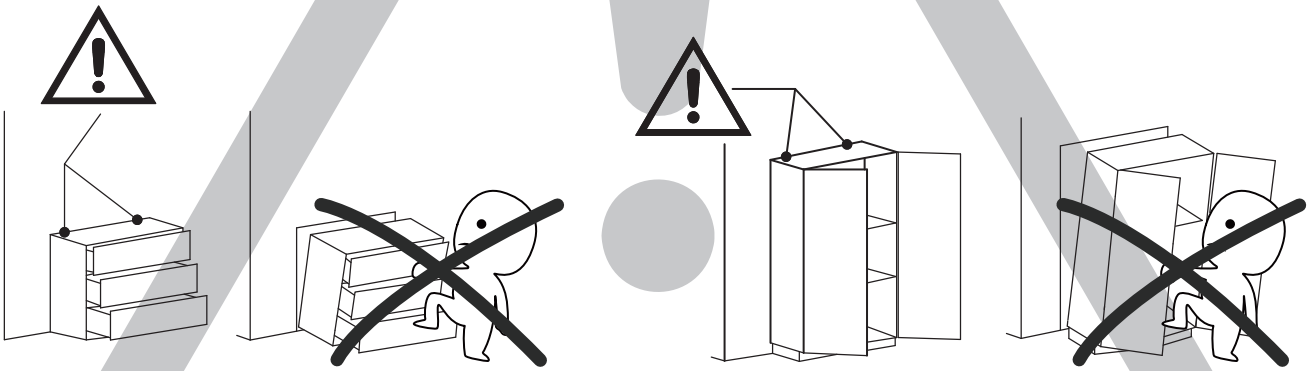

ANTI-TOPPLE WARNING !

Overturned furniture can cause serious or fatal crush injuries. To prevent tipping over, be sure to use the wall attachment, if not included with this product. Please purchase the wall attachment that fit your wall. If unsure, seek professional advice. Please read and follow each step of the instructions carefully.

IMPORTANT !

It is important that any product which is assembled using any kind of screw is re-tightened 2 weeks after assembly,and once every 3 months - in order to assure stability through-out the lifespan of the product.

For regular maintenance and cleaning of the product, for the frame, please use a rag dipped in neutral detergent to fully wipe it, and then dry it with a clean rag.For glass materials, wipe with a rag dampened with water glass cleaner, and then dry with a dry rag.

Do not use an electric screwdriver, and do not use too much force when installing, because the board is easy to break.

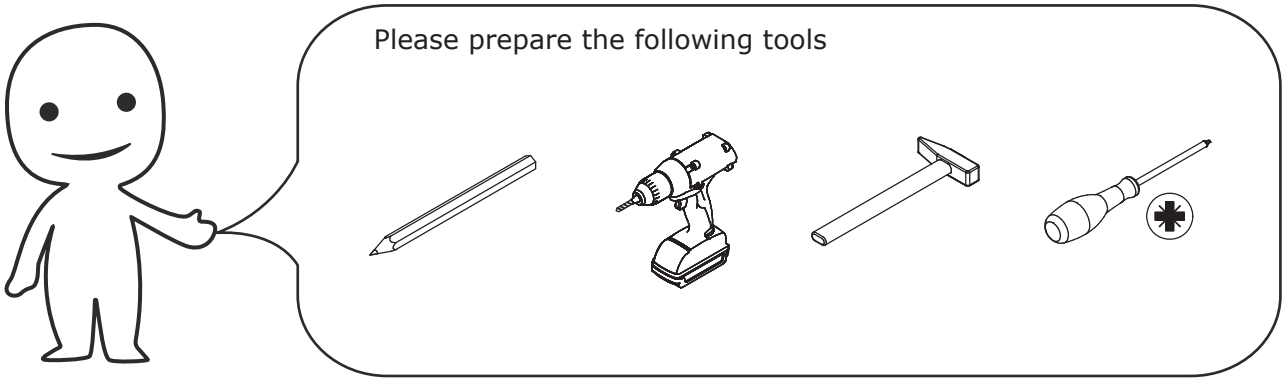

When installing, please carefully confirm whether each screw corresponds to the manual, accessories with similar shapes can be distinguished by size

A x 63	B x 63	C x 51	D x 27	E x 32
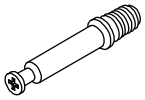 CRA0635A	CRB1595A	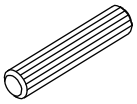 CRF0830A	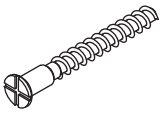 CRC0540A	CRD3512A

F x 34	G x 11	H x 11	I x 2	J x 6
CRE0314A	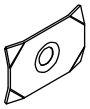	CRD0314A	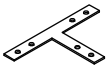	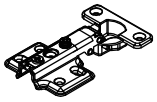 DGA861A

K x 3	L x 70	M x 7	N x 14	P x 4
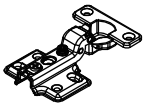 DGA861B	CRD3514A	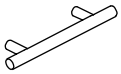	CRE0420A	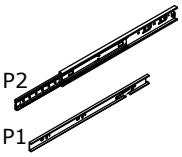 #3508 14”

R x 2	S x 1	U x 2
	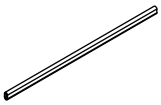	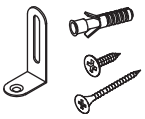

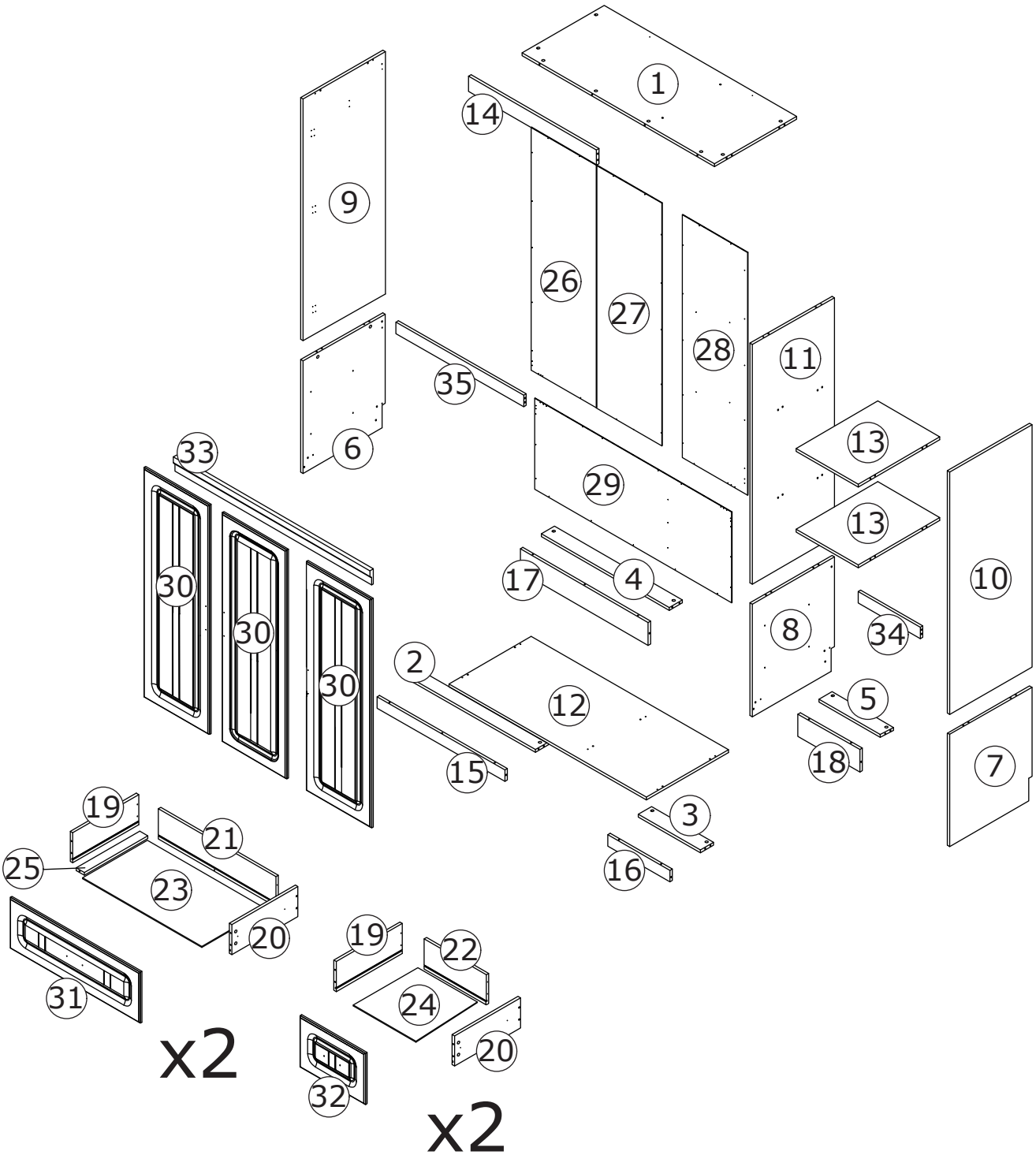

⚠WARNING

Children have died from furniture tipover.To reduce the risk of furniture tipover:

- ALWAYS install Anti-tip device provided.
- NEVER put a TV on this product.
- NEVER allow children to stand,climb or hang on drawers,doors,or shelves.
- NEVER open more than one drawer at a time.
- Place heaviest items in the lowest drawers.

This is a permanent label.
Do not remove!

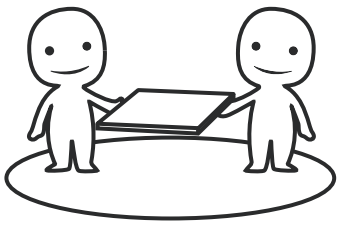

ASSEMBLED BY 2 ADULTS

Slides Must Be Separated Before Assembly.
After Separated, Set Aside Until Needed for Assembly.

Las diapositivas deben separarse antes del montaje.
Después de la separación, déjelo a un lado hasta que sea necesario.

Les glissières doivent être séparées avant l'assemblage.
Après la séparation, mettez de côté jusqu'au moment de l'assemblage.

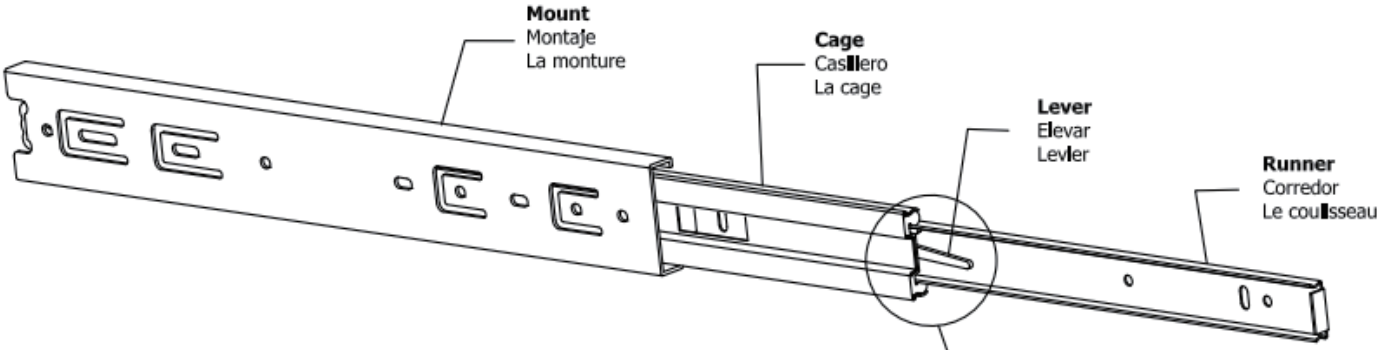

STEP 1: Extend Slide
Extender la diapositiva
Extendre la diapositive

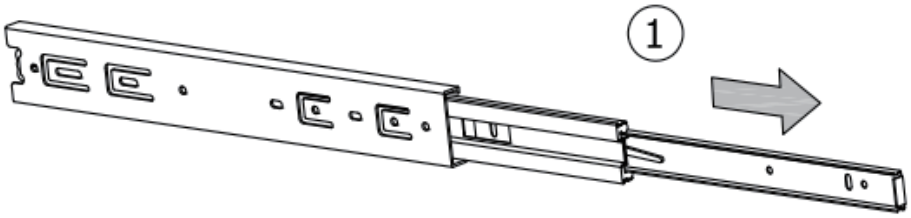

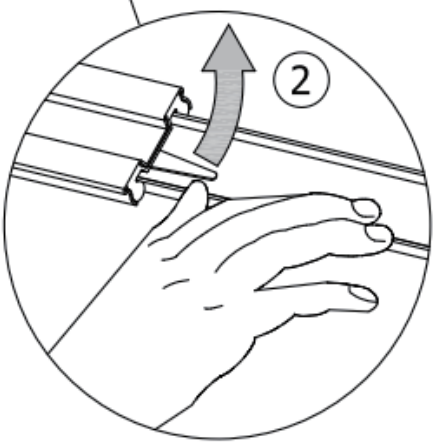

STEP 2: Push Lever UP
Empujar hacia arriba
Lever le levier

STEP 3: Remove Runner
Quitar el corredor
Enlever le coureur

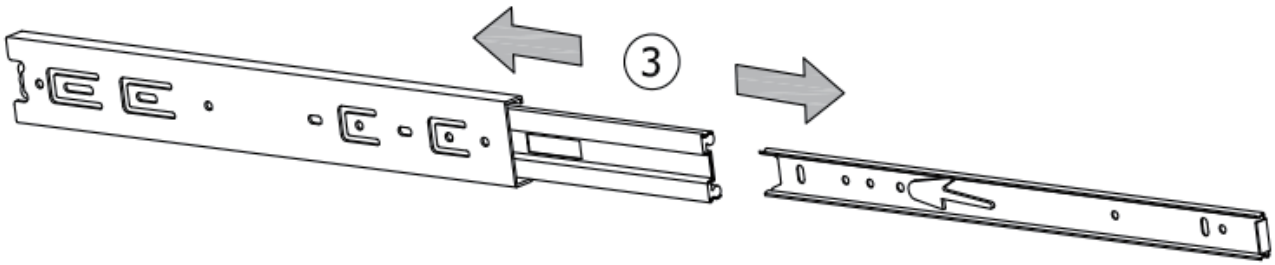

1

A x 5

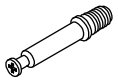

CRA0635A

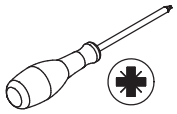

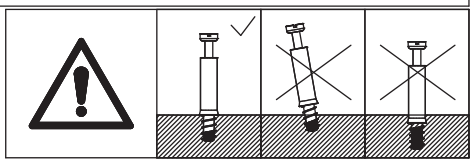

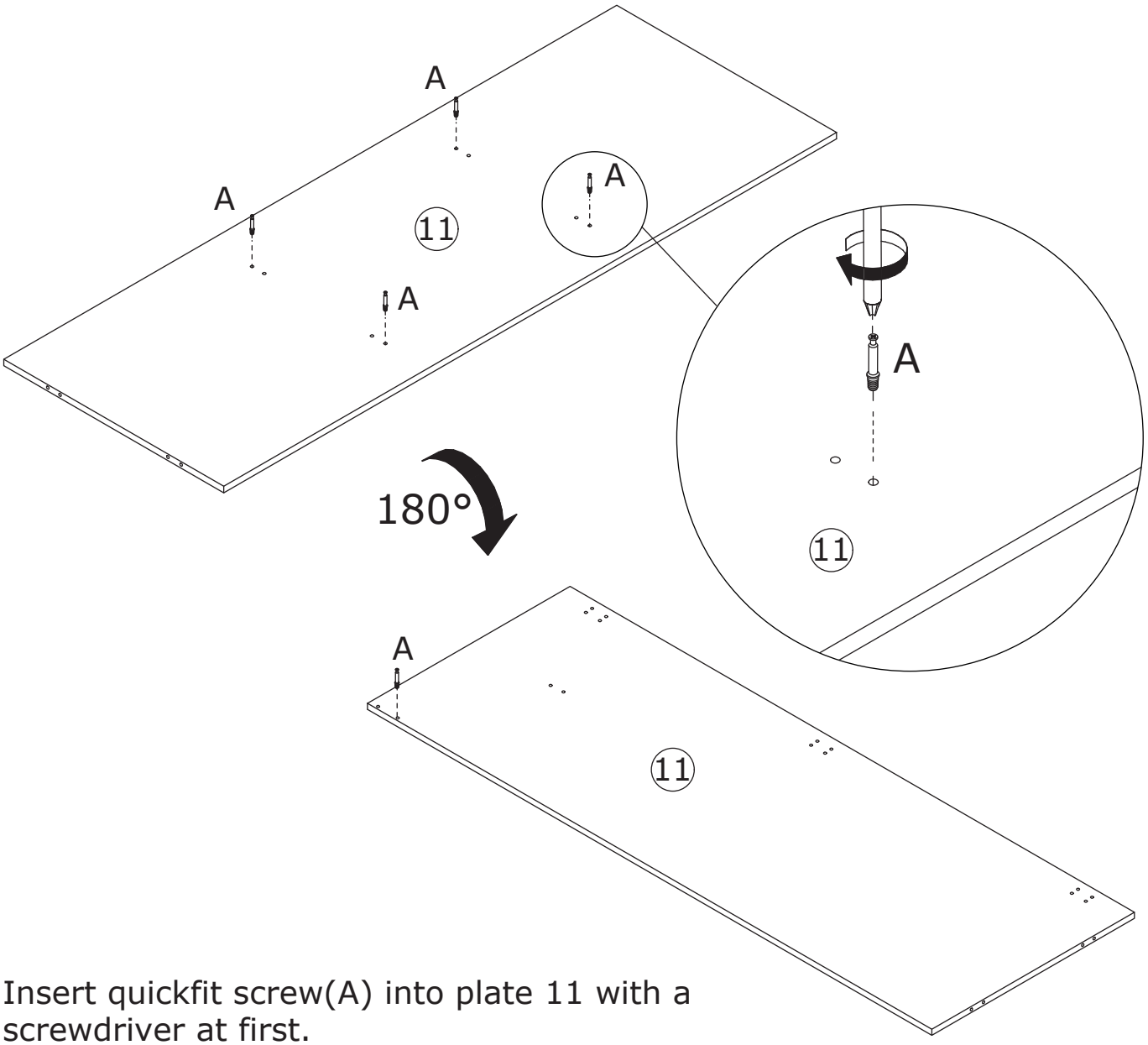

Insert quickfit screw(A) into plate 11 with a screwdriver at first.
Flip the plate, insert quickfit screw(A) as well.

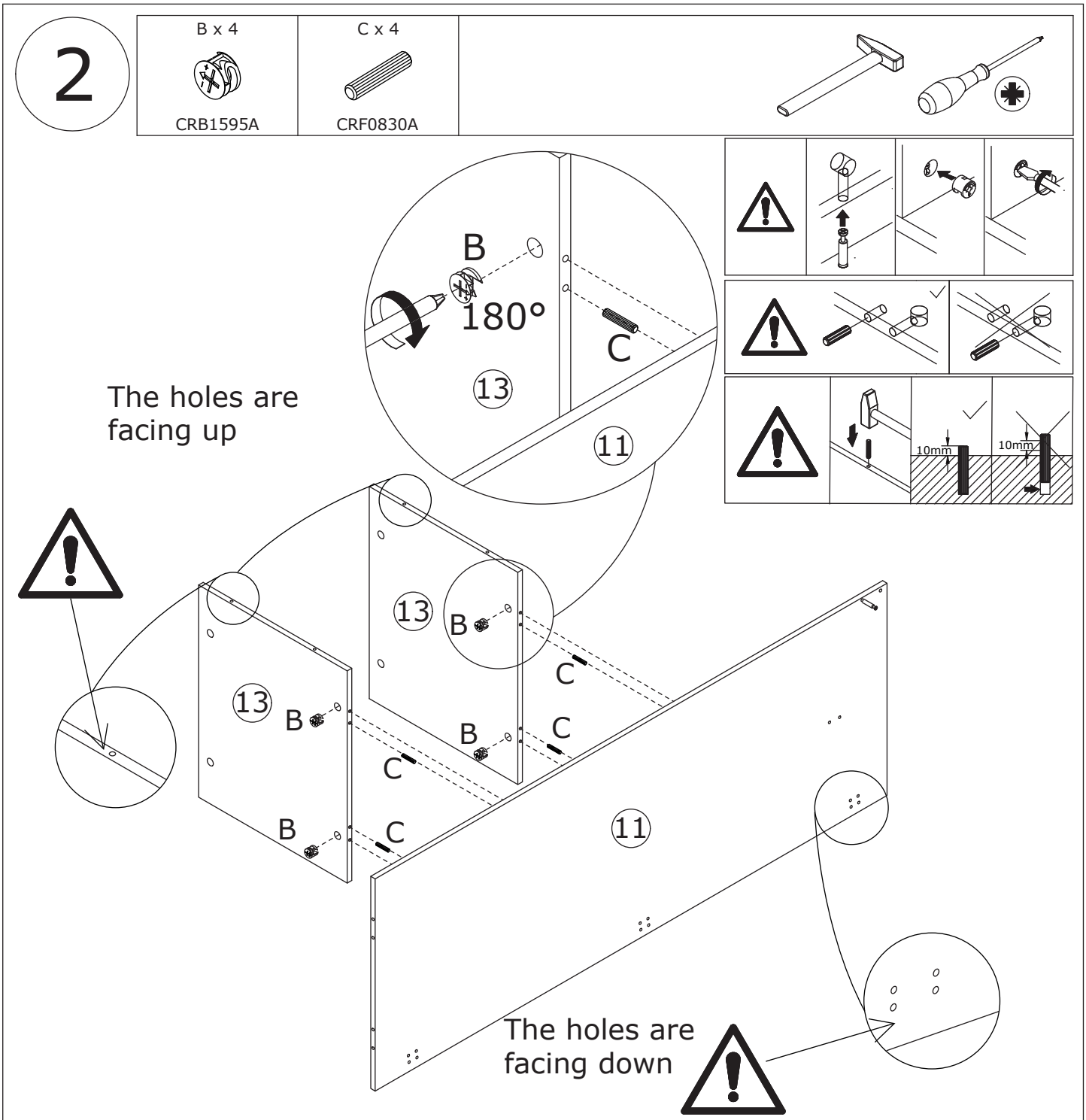

Insert wooden dowel(C) into plate 13 at first, attach to plate 11 as shown.
Put cam lock(B) into holes in plate 13 and turn clockwise to tighten as shown.

3

B x 1	C x 1	
		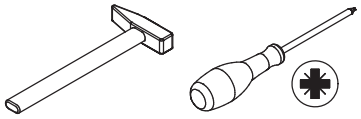
CRB1595A	CRF0830A	

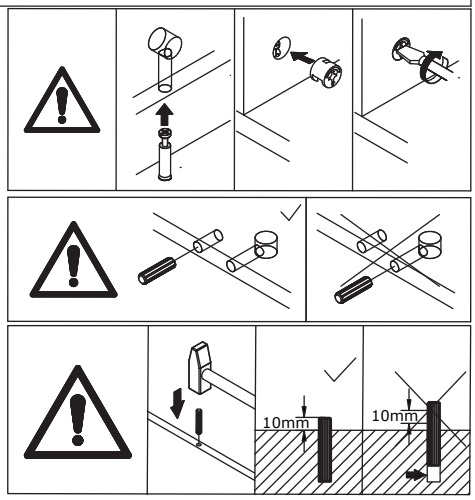

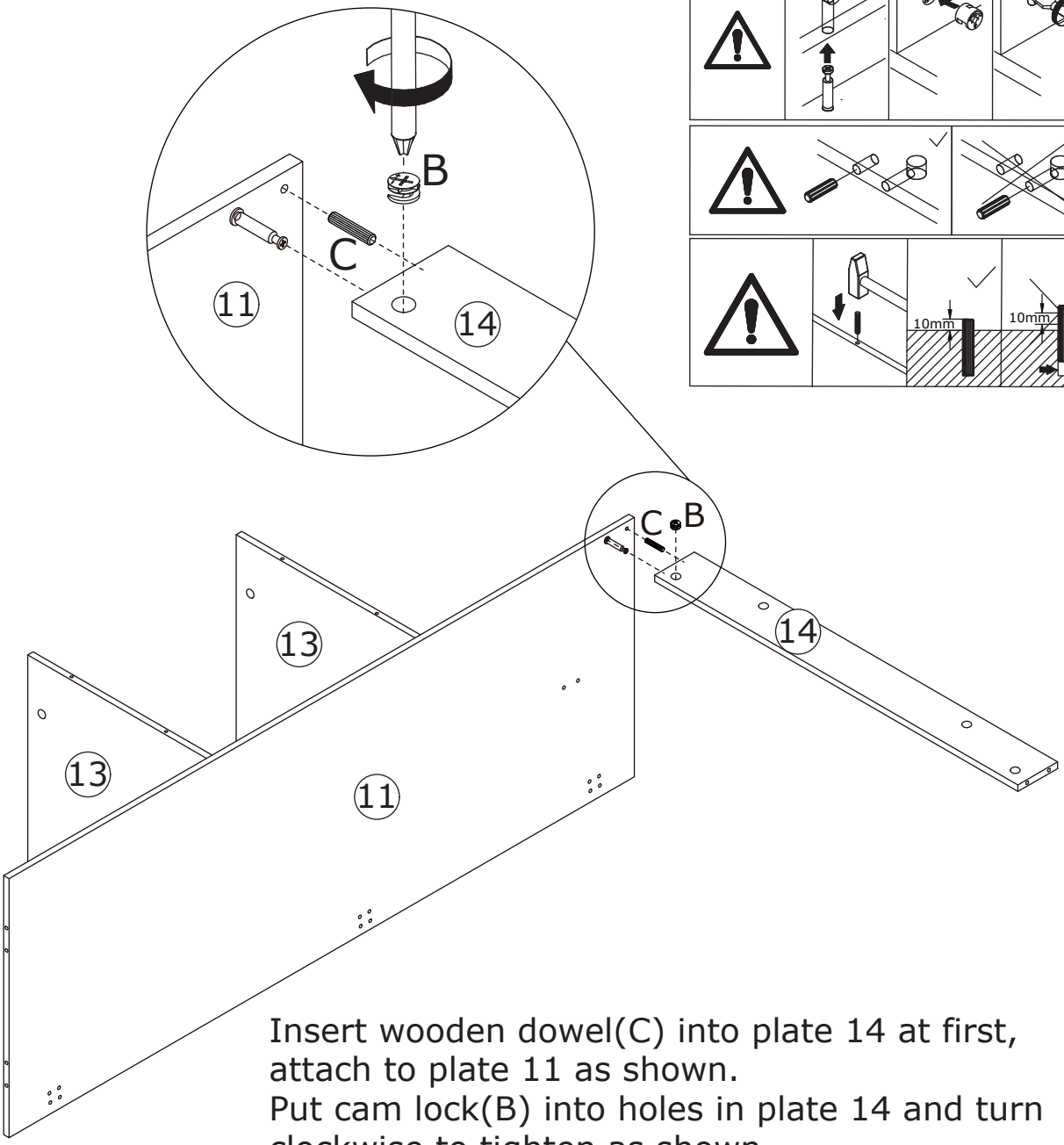

Insert wooden dowel(C) into plate 14 at first, attach to plate 11 as shown.
Put cam lock(B) into holes in plate 14 and turn clockwise to tighten as shown.

4

A x 2

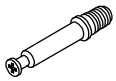

CRA0635A

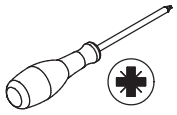

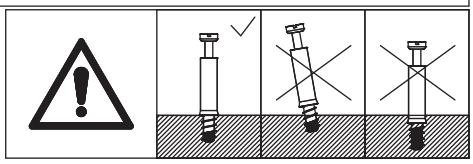

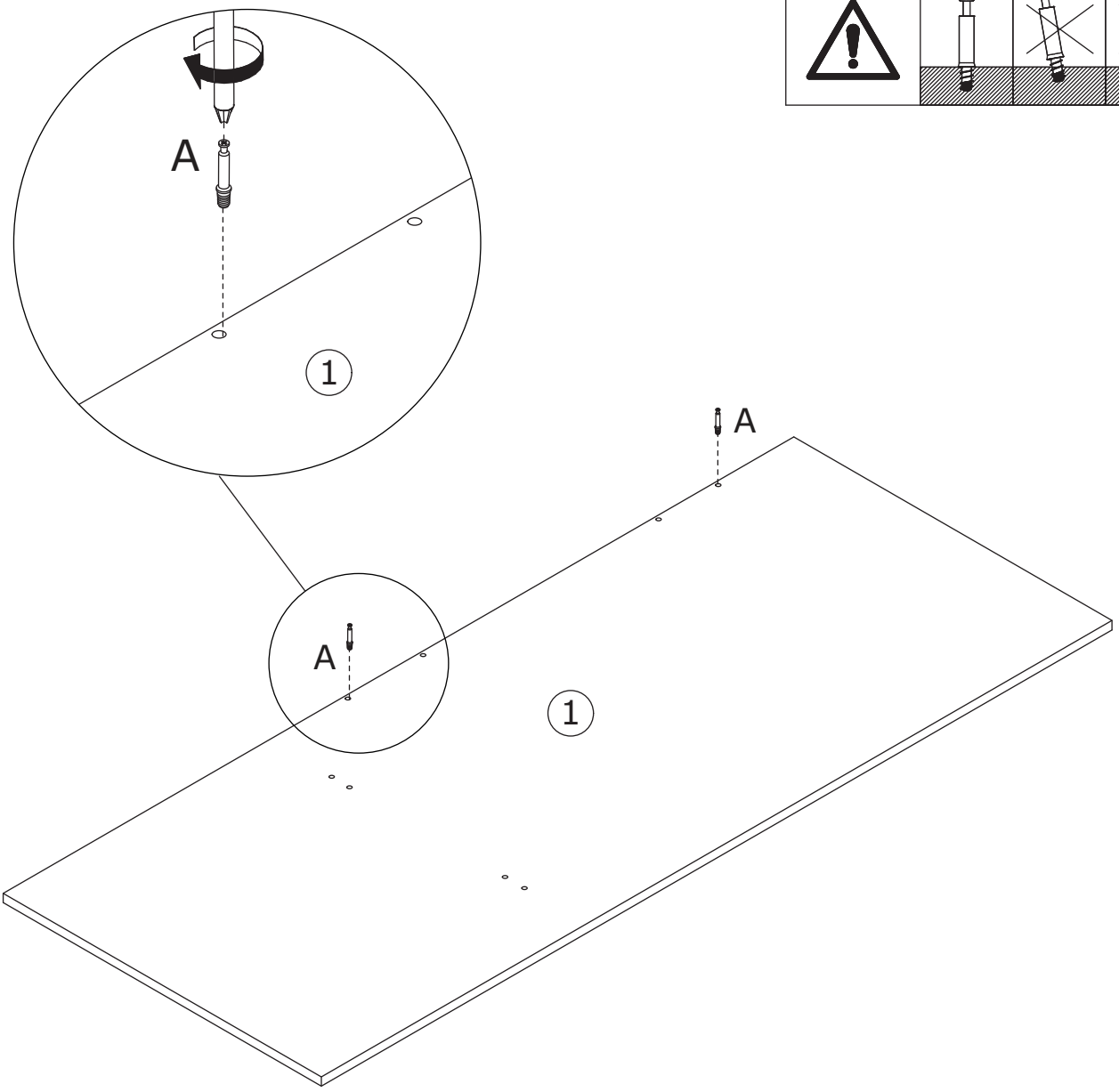

Insert quickfit screw(A) into plate 1 as shown.

5

B x 2	C x 4	D x 2	
CRB1595A	CRF0830A	CRC0540A	

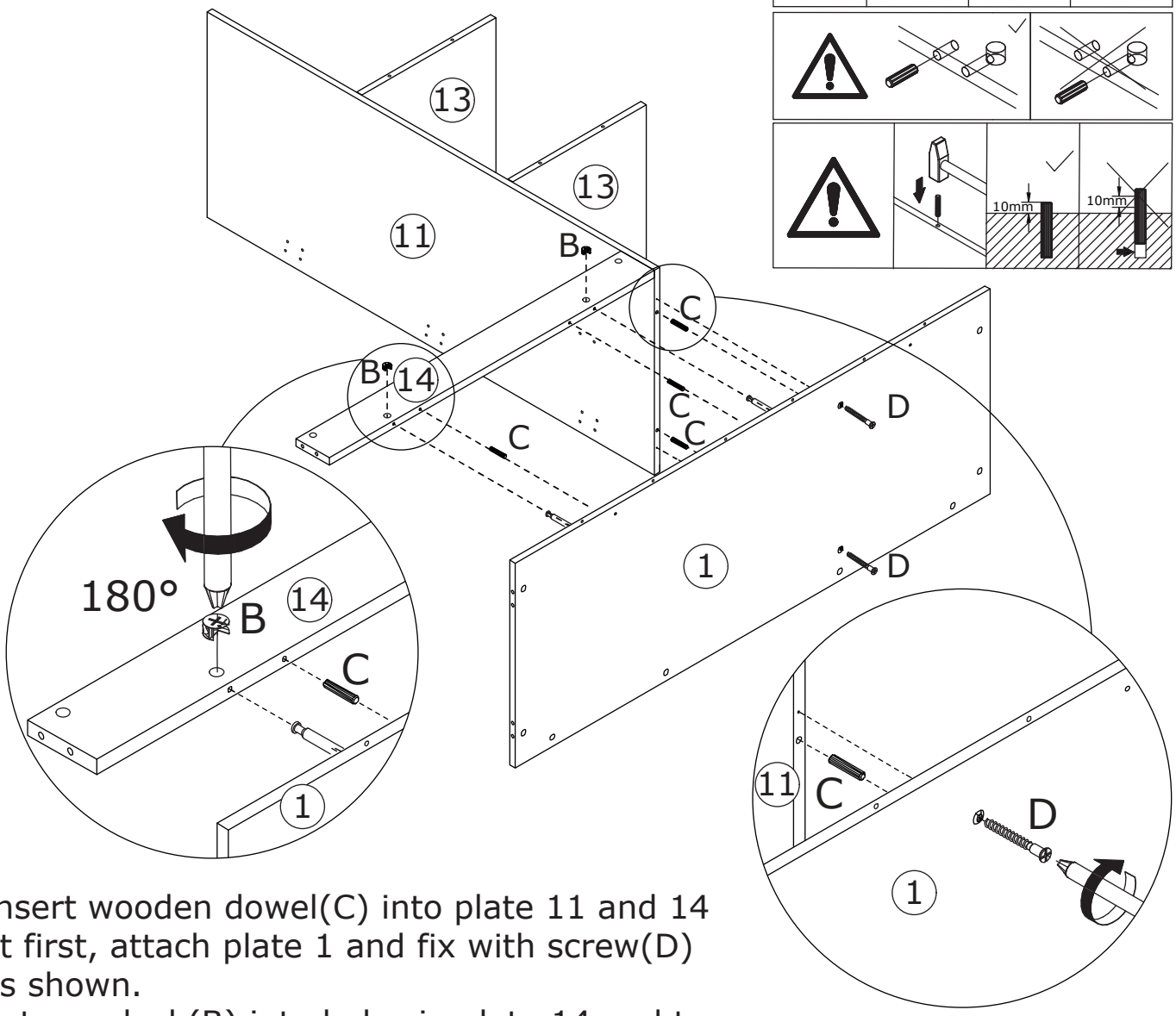

Insert wooden dowel(C) into plate 11 and 14 at first, attach plate 1 and fix with screw(D) as shown.
Put cam lock(B) into holes in plate 14 and turn clockwise to tighten as shown.

6

A x 6

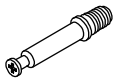

CRA0635A

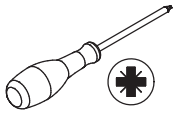

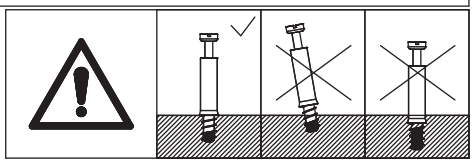

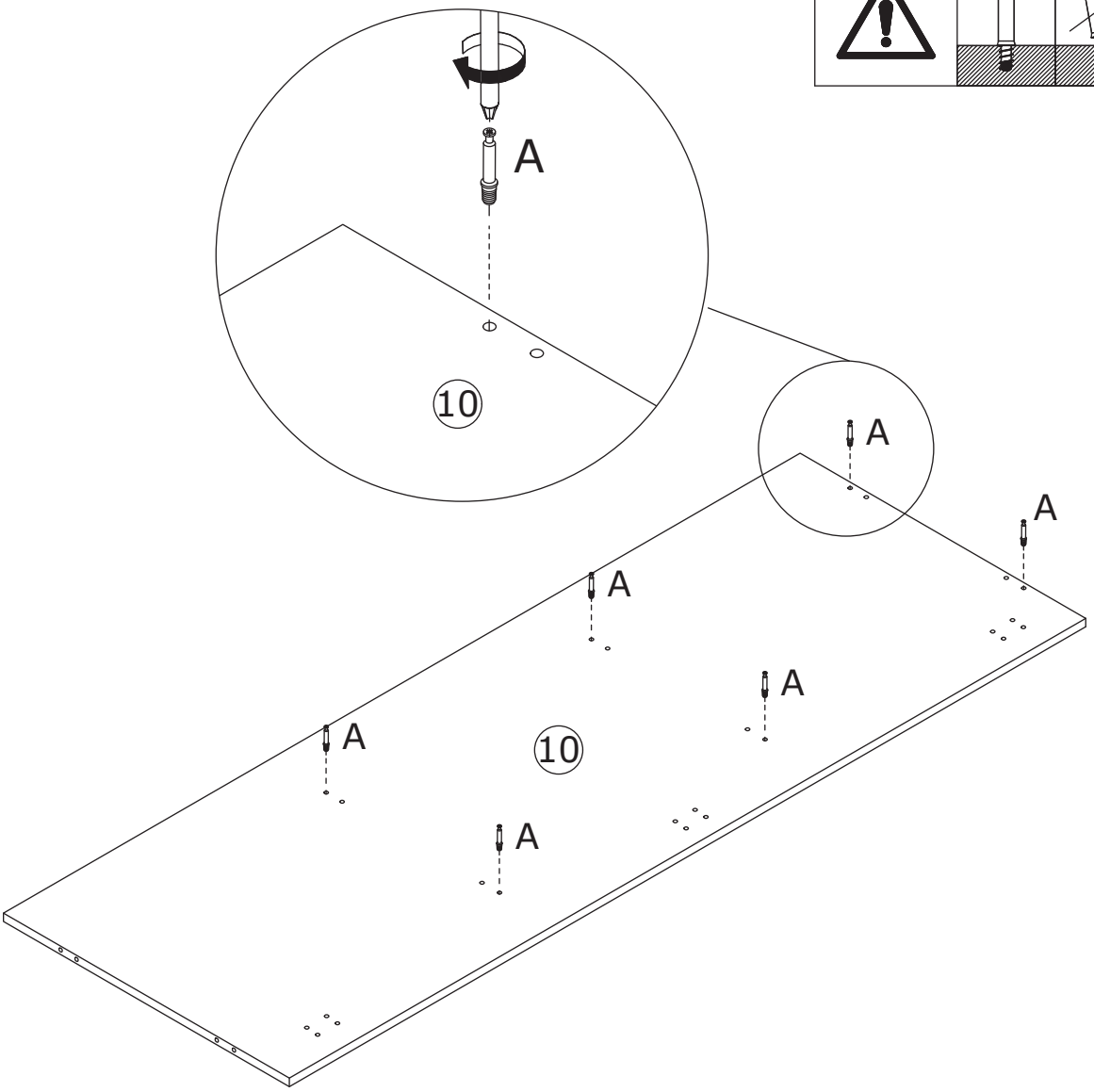

Insert quickfit screw(A) into plate 10 as shown.

7

B x 6	C x 6	
CRB1595A	CRF0830A	

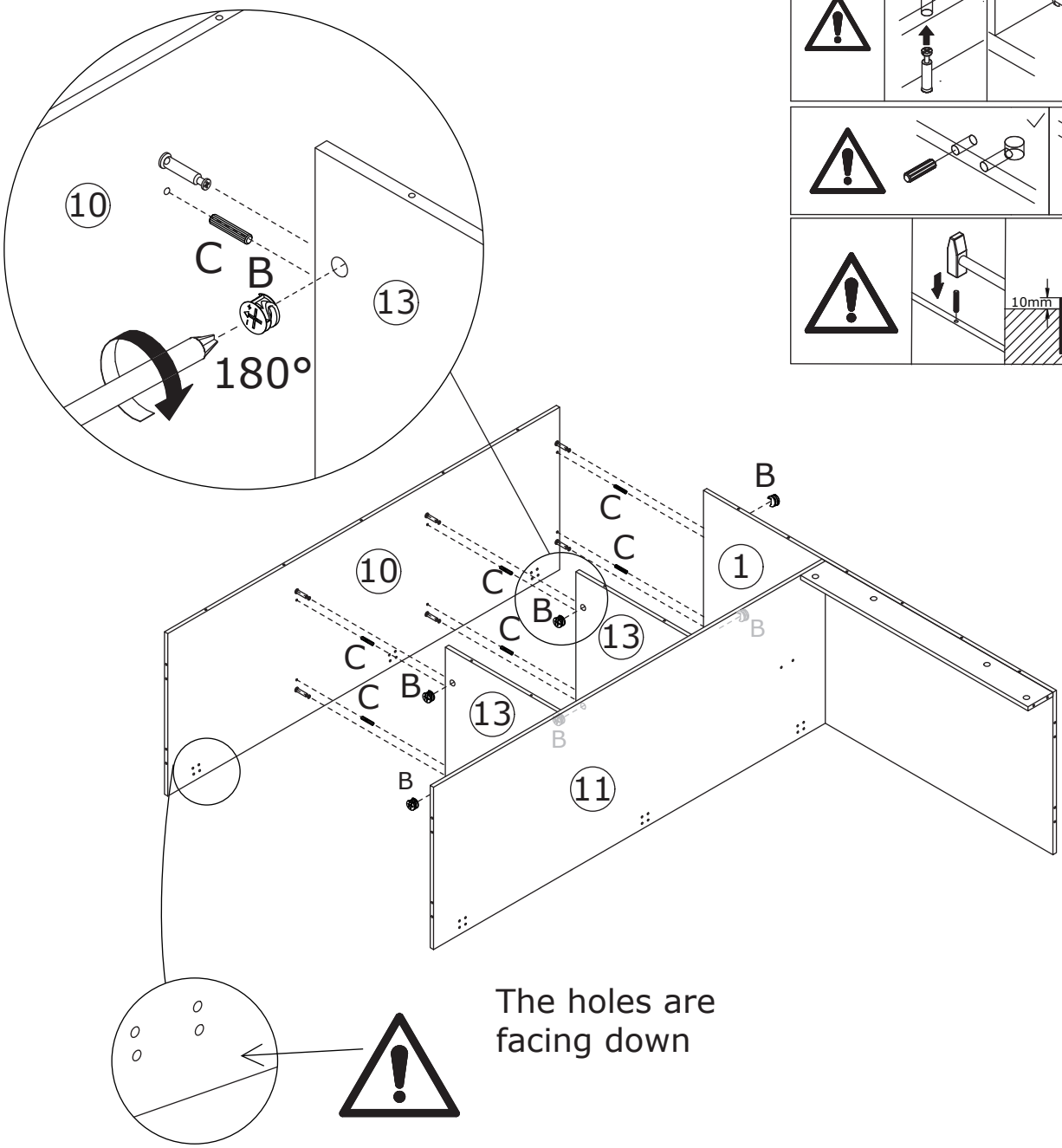

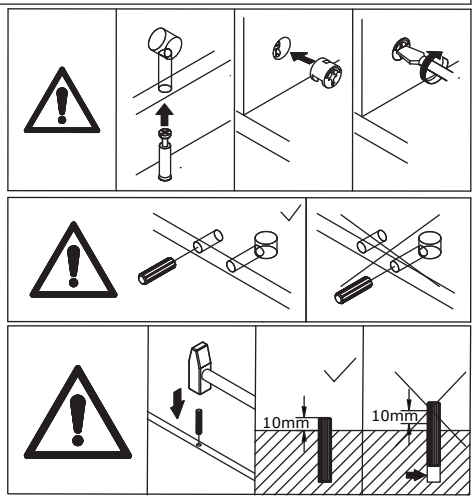

Insert wooden dowel(C) into plate 1 and 13 at first, attach plate 10 as shown.
Put cam lock(B) into holes in plate 1,13 and turn clockwise to tighten as shown.

8

A x 3

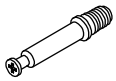

CRA0635A

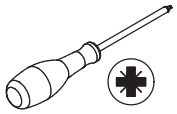

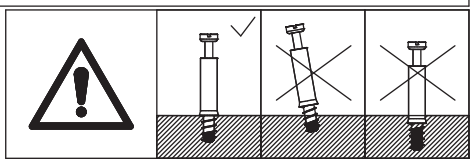

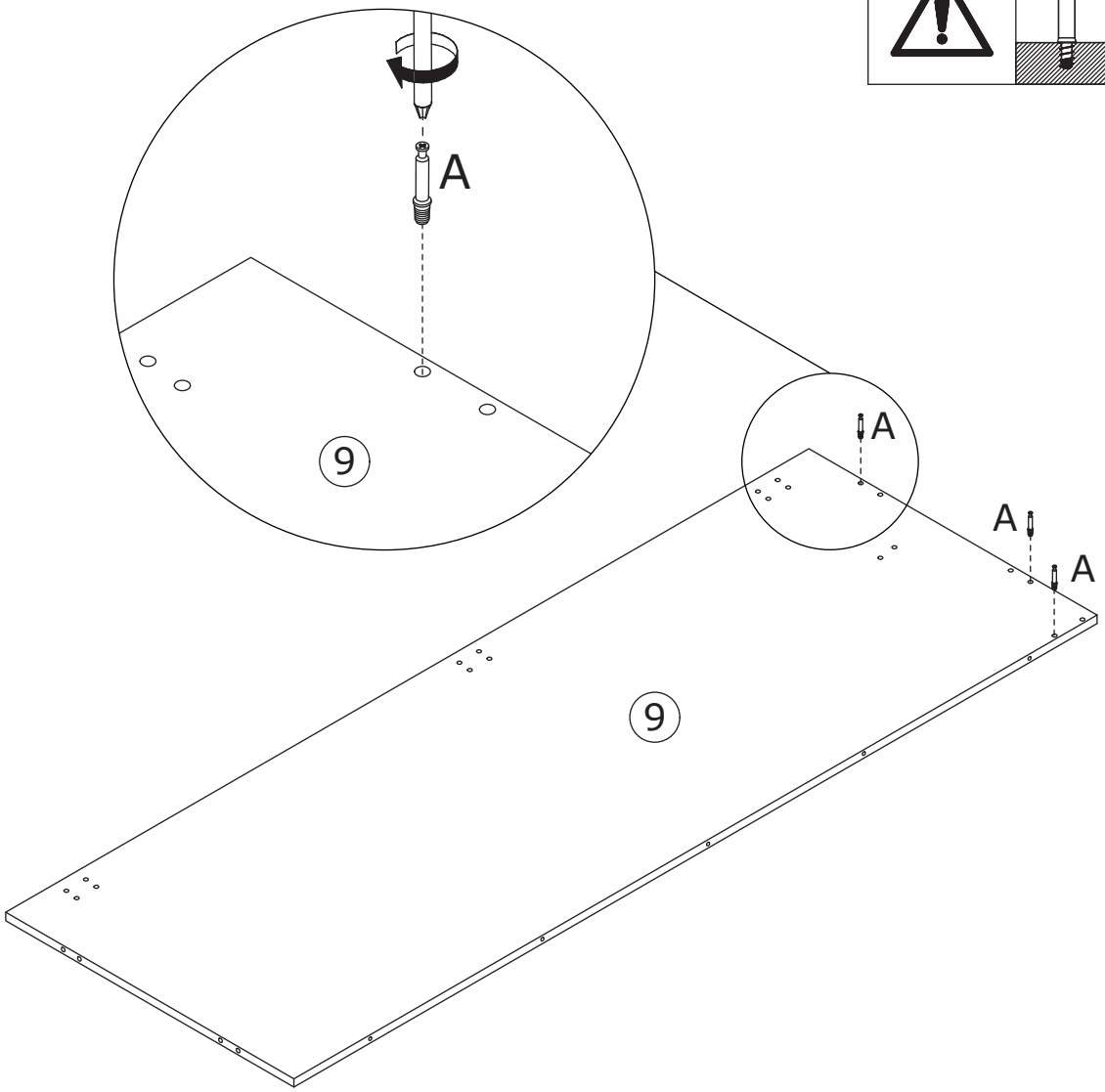

Insert quickfit screw(A) into plate 9 as shown.

9

B x 3	C x 3	
CRB1595A	CRF0830A	

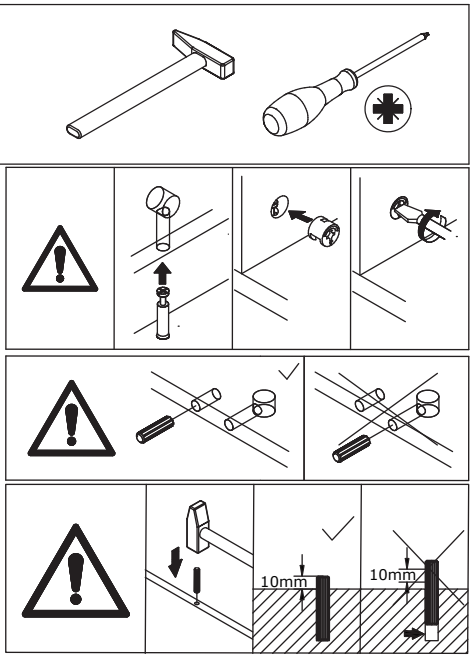

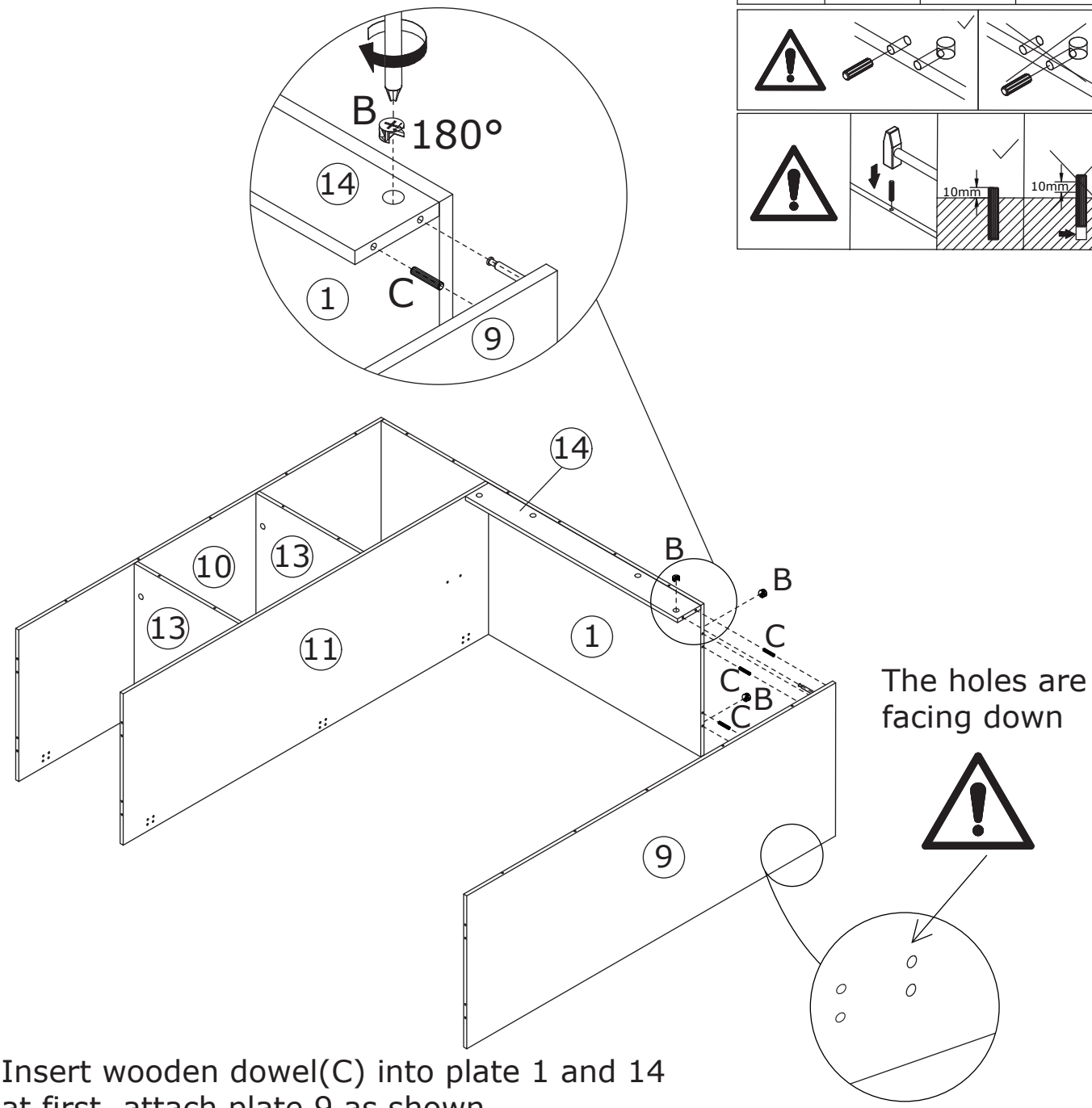

Insert wooden dowel(C) into plate 1 and 14 at first, attach plate 9 as shown.
Put cam lock(B) into holes in plate 1,14 and turn clockwise to tighten as shown.

10

A x 6

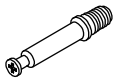

CRA0635A

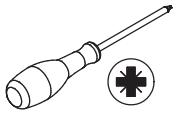

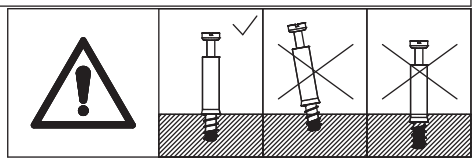

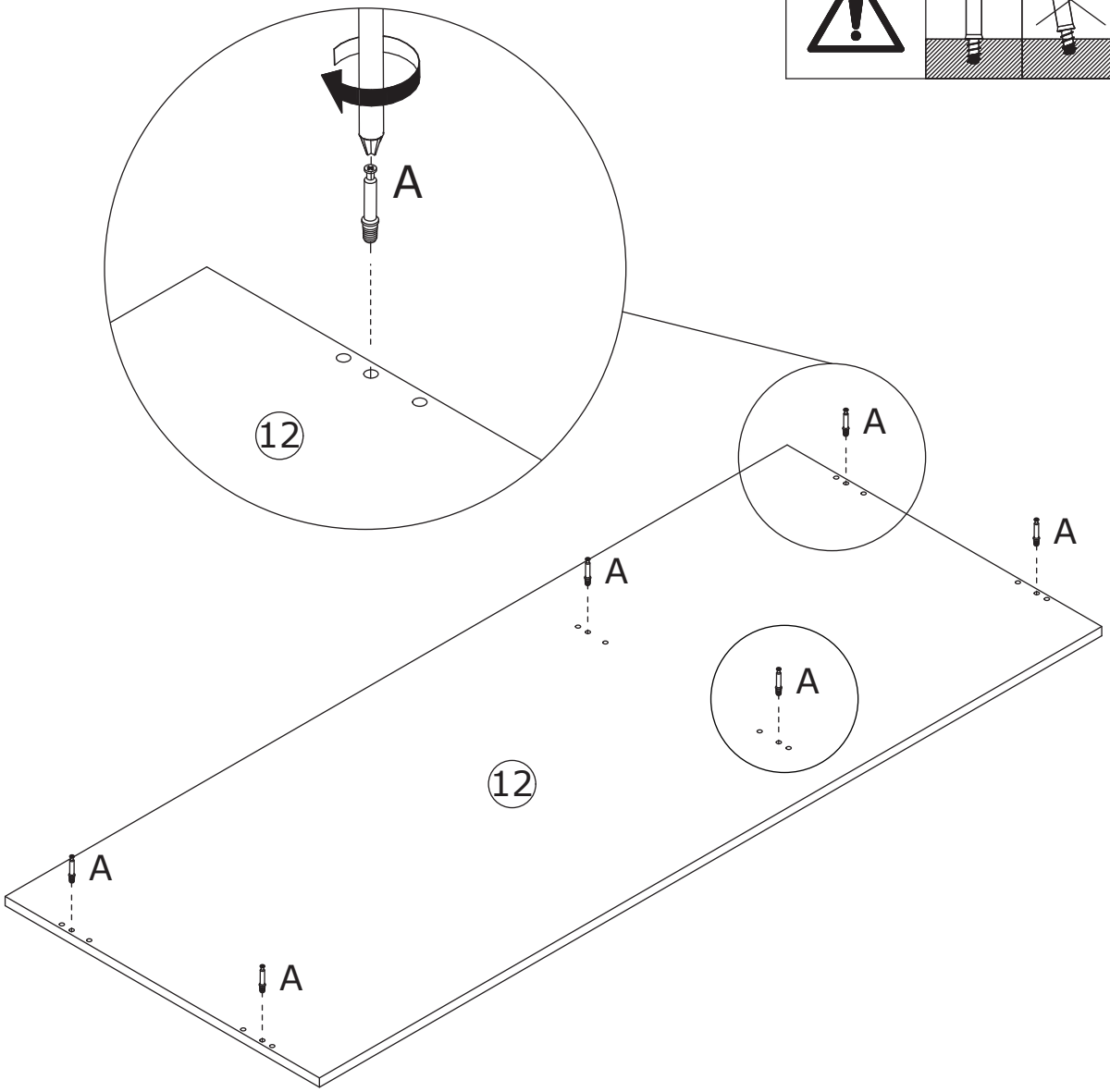

Insert quickfit screw(A) into plate 12 as shown.

11

C x 6	D x 6	
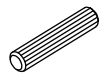	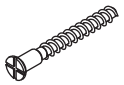	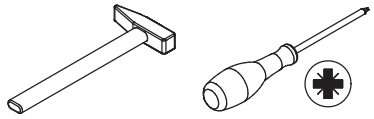
CRF0830A	CRC0540A	

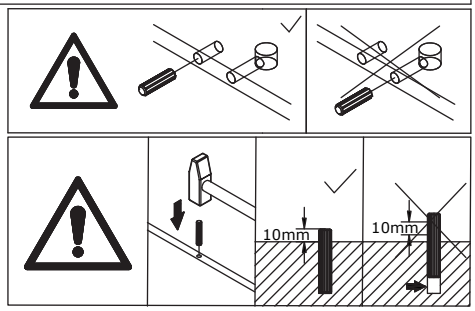

Insert wooden dowel(C) into plate 10,11 and 9 at first, attach plate 12 and fix with screw(D) as shown.

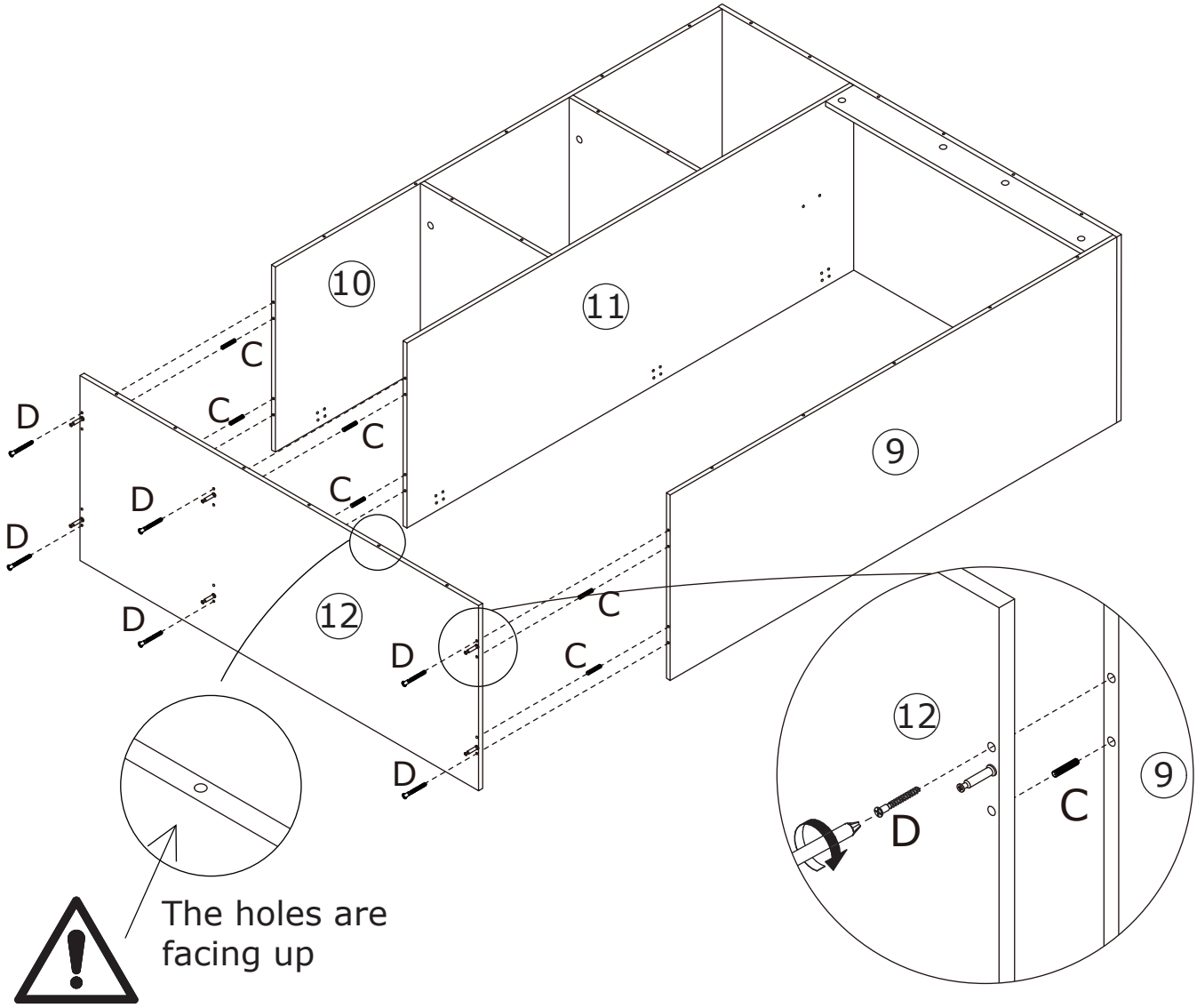

12

A x 6	P x 4	E x 8	
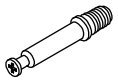			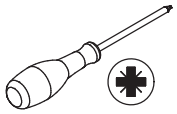
CRA0635A	#3508 14″	CRD3512A	

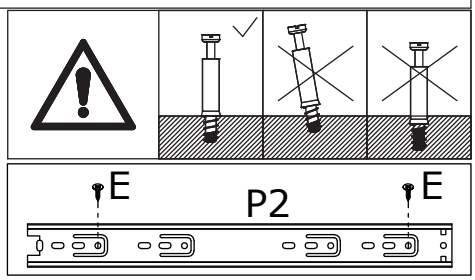

Fix slide rail(P2) to plate 6 and 7 with screw(E) as shown.
Insert quickfit screw(A) into plate 6 and 7 as shown.

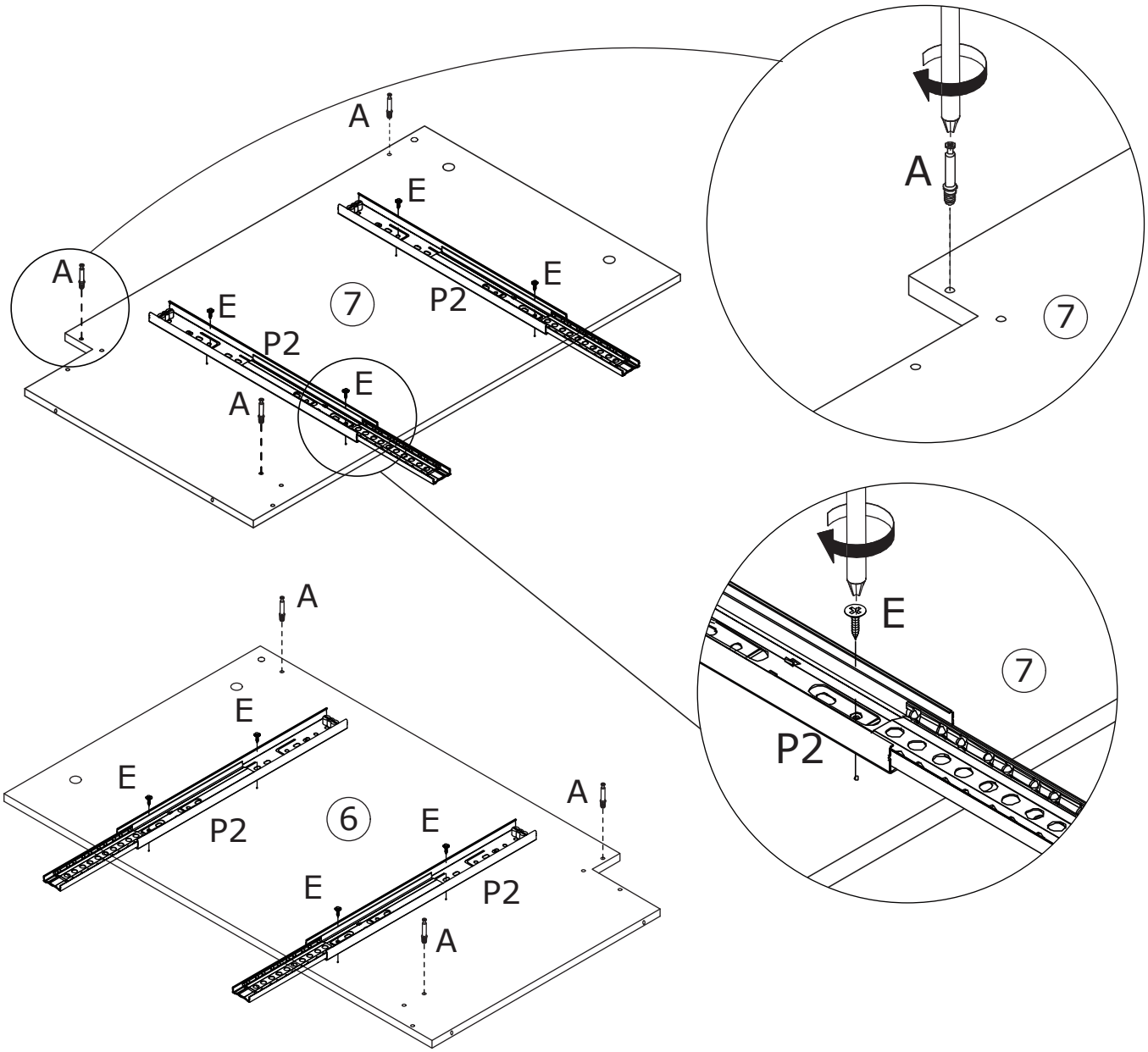

13

A x 5	P x 4	E x 8	
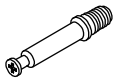			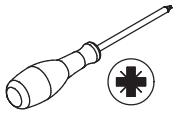
CRA0635A	#3508 14″	CRD3512A	

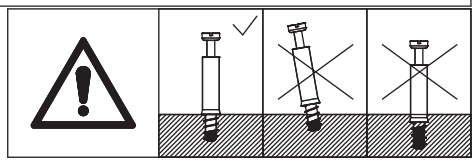

Fix slide rail(P2) to plate 8 with screw(E) and insert quickfit screw(A) at first.
Flip the plate, fix slide rail (P2) with screw(E) and insert quickfit screw(A) as well.

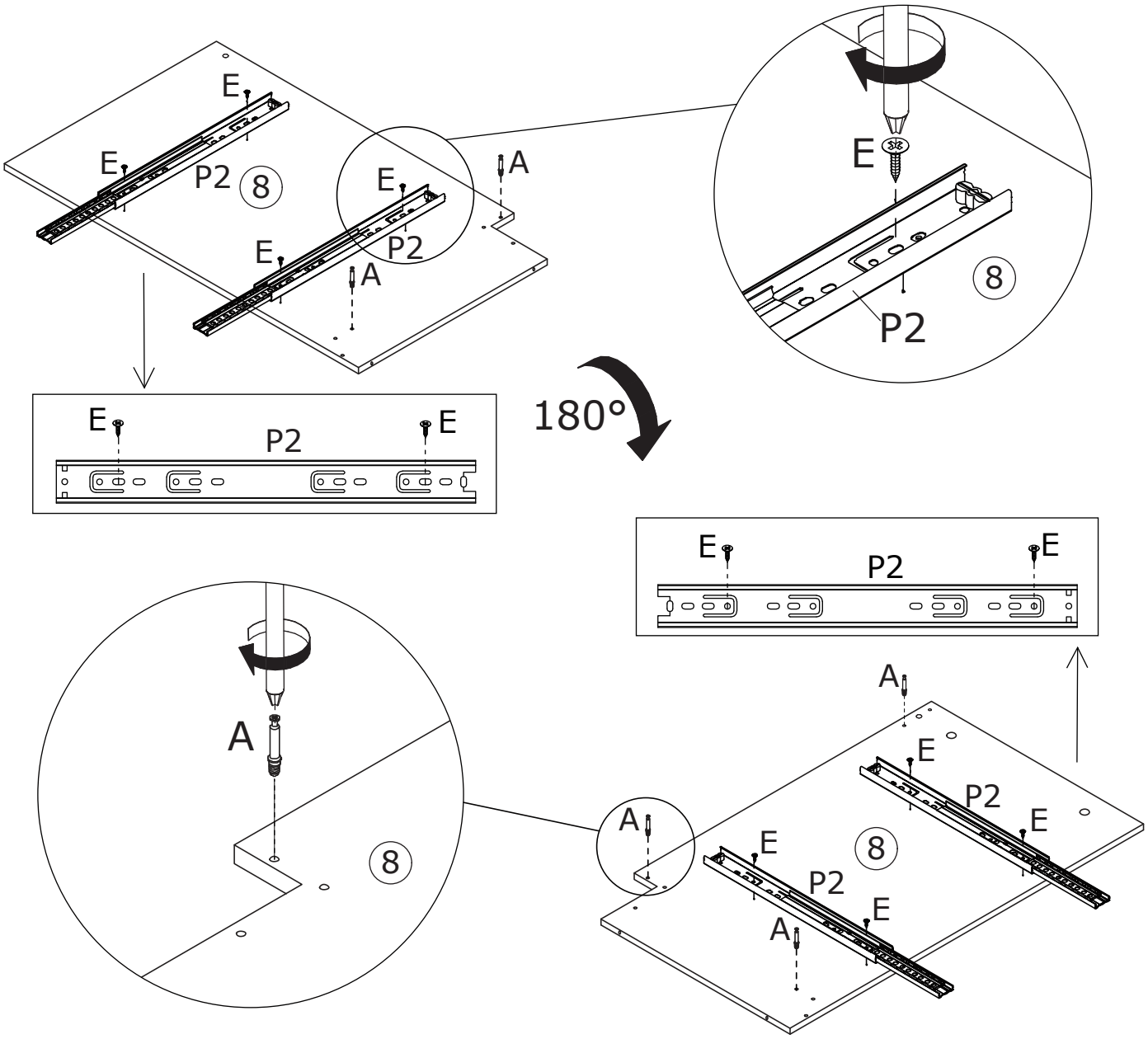

14

A x 4

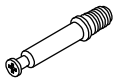

CRA0635A

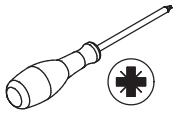

Insert quickfit screw(A) into plate 3 and 5 with a screwdriver as shown.

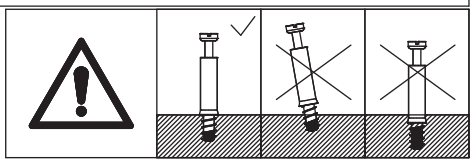

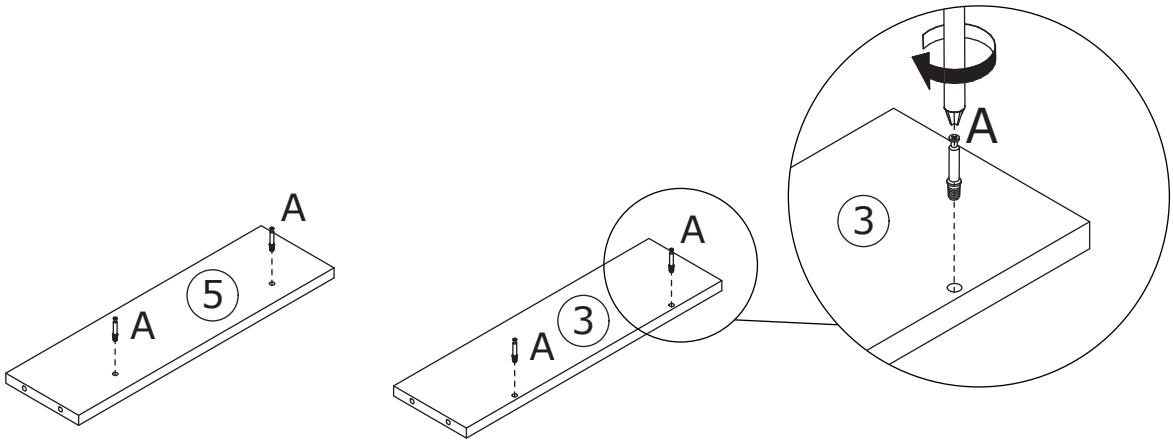

15

B x 4

CRB1595A

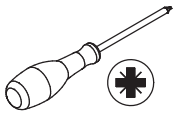

Attach plate 3 to plate 16; plate 5 to plate 18, then turn cam lock(B) clockwise to tighten as shown.

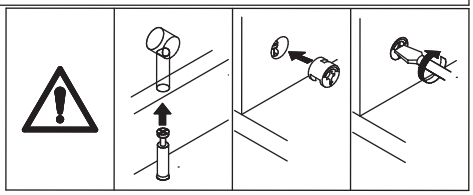

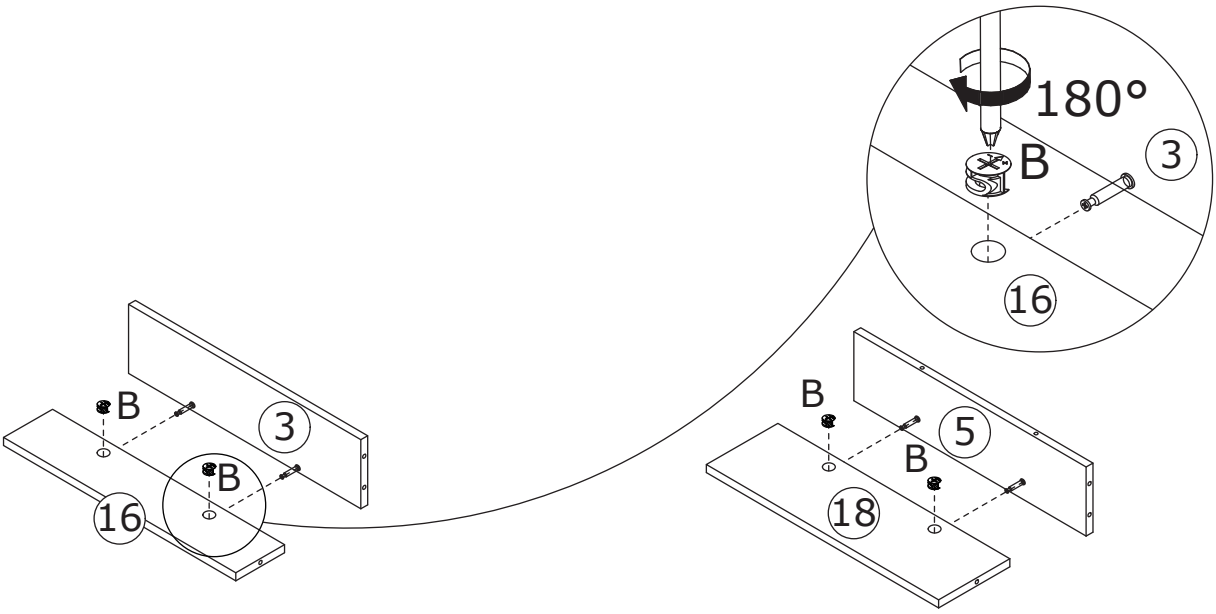

16

B x 3	C x 5
CRB1595A	CRF0830A

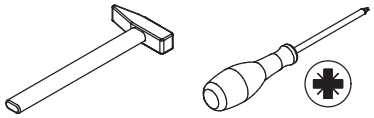

Insert wooden dowel(C) into plate 5,18,3,16 and 34 at first, attach to plate 7 as shown.
Put cam lock(B) into holes in plate 3,5,34 and turn clockwise to tighten as shown.

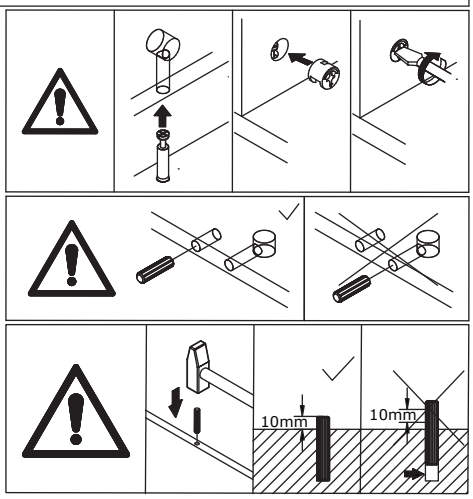

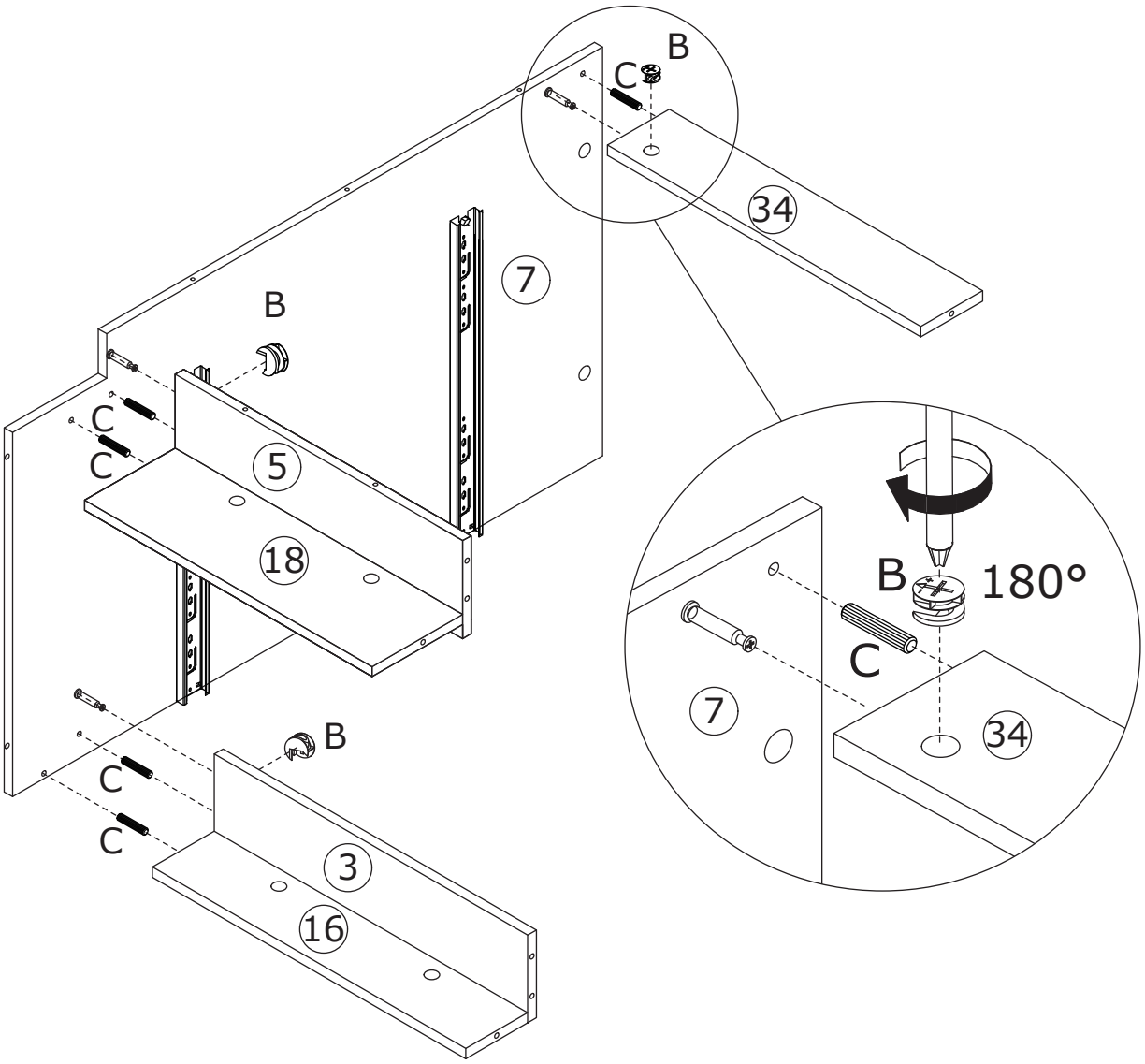

17

B x 2	C x 4	D x 1	
		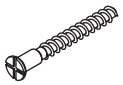	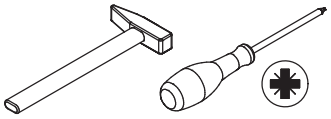
CRB1595A	CRF0830A	CRC0540A	

Insert wooden dowel(C) into plate 5,18,3 and 16 at first, attach to plate 8 as shown.Put cam lock(B) into holes in plate 3,5 and turn clockwise to tighten as shown.
Fix plate 8 to plate 34 with screw(D) as shown.

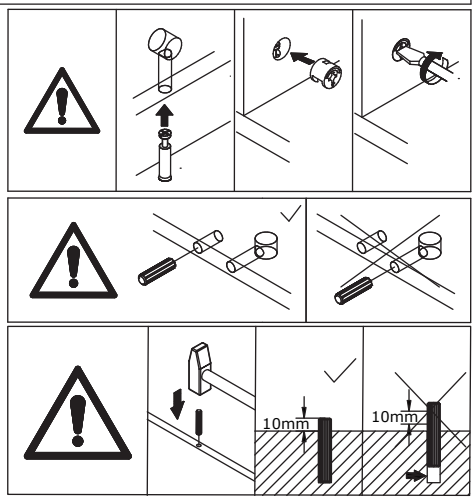

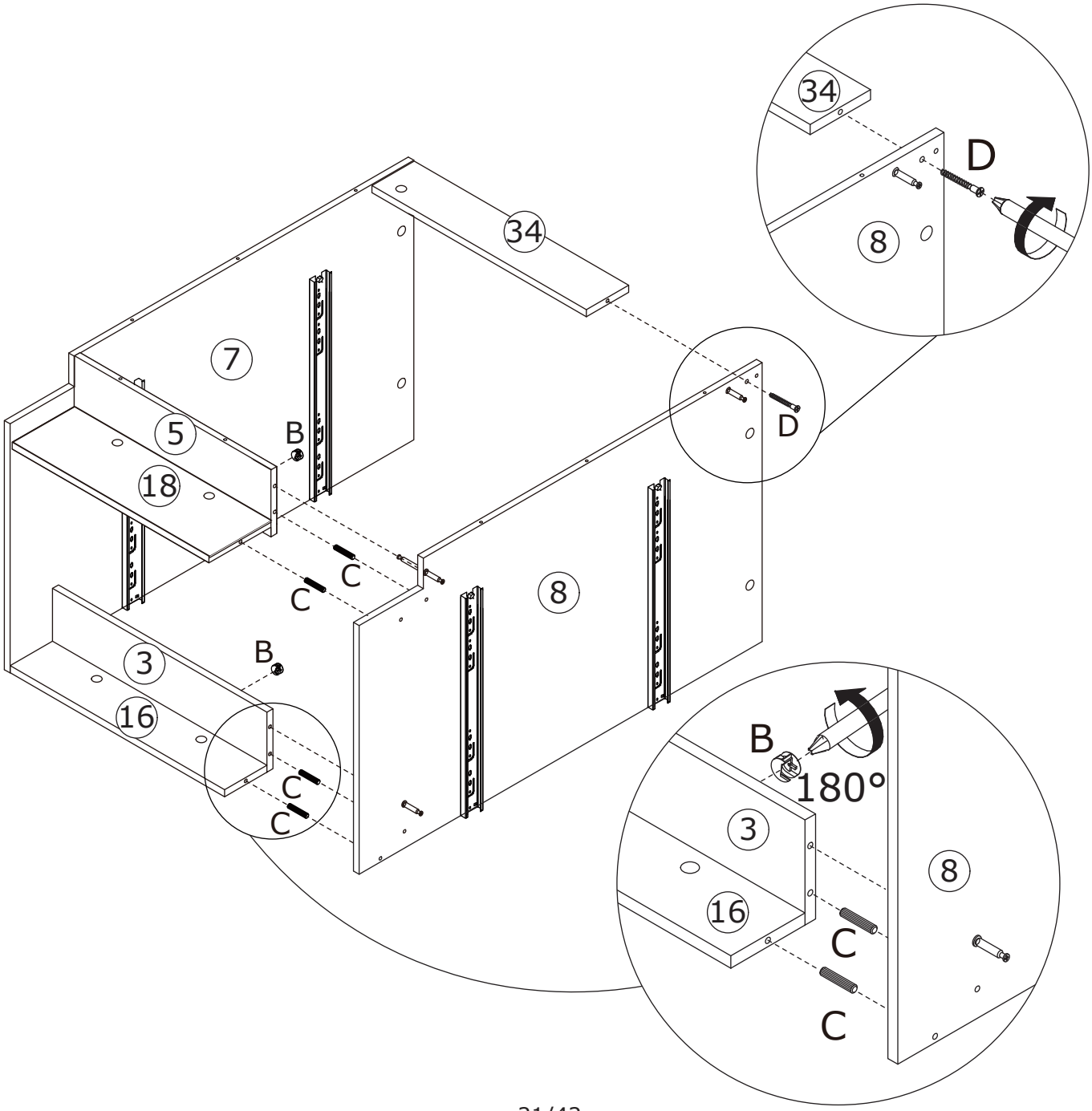

18

A x 4	
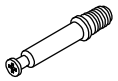 CRA0635A	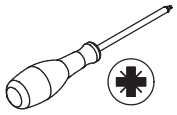

Insert quickfit screw(A) into plate 2 and 4 with a screwdriver as shown.

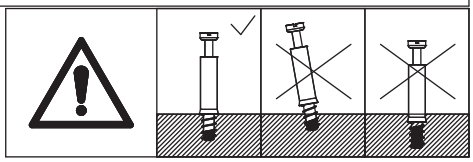

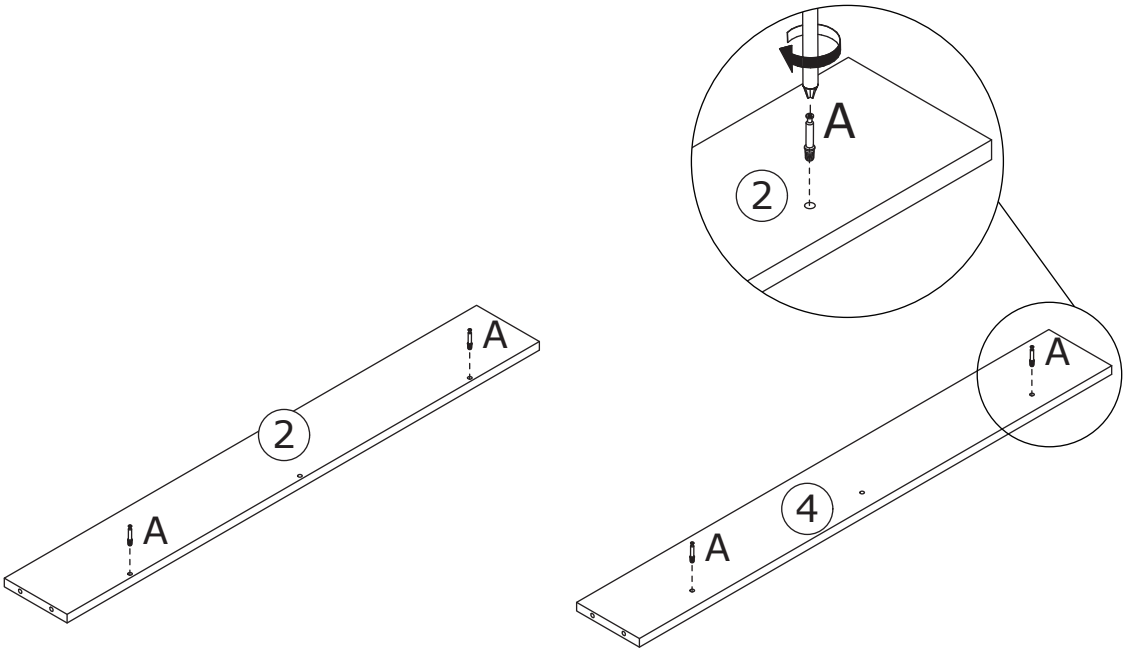

19

B x 4	C x 2	
CRB1595A	CRF0830A	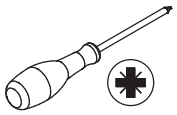

Attach plate 2 to plate 15, plate 4 to plate 17, then turn cam lock(B) clockwise to tighten as shown.

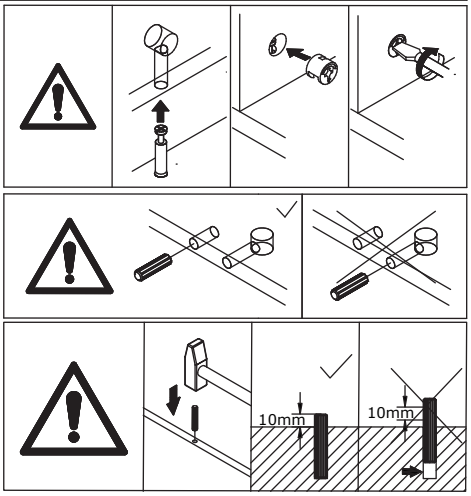

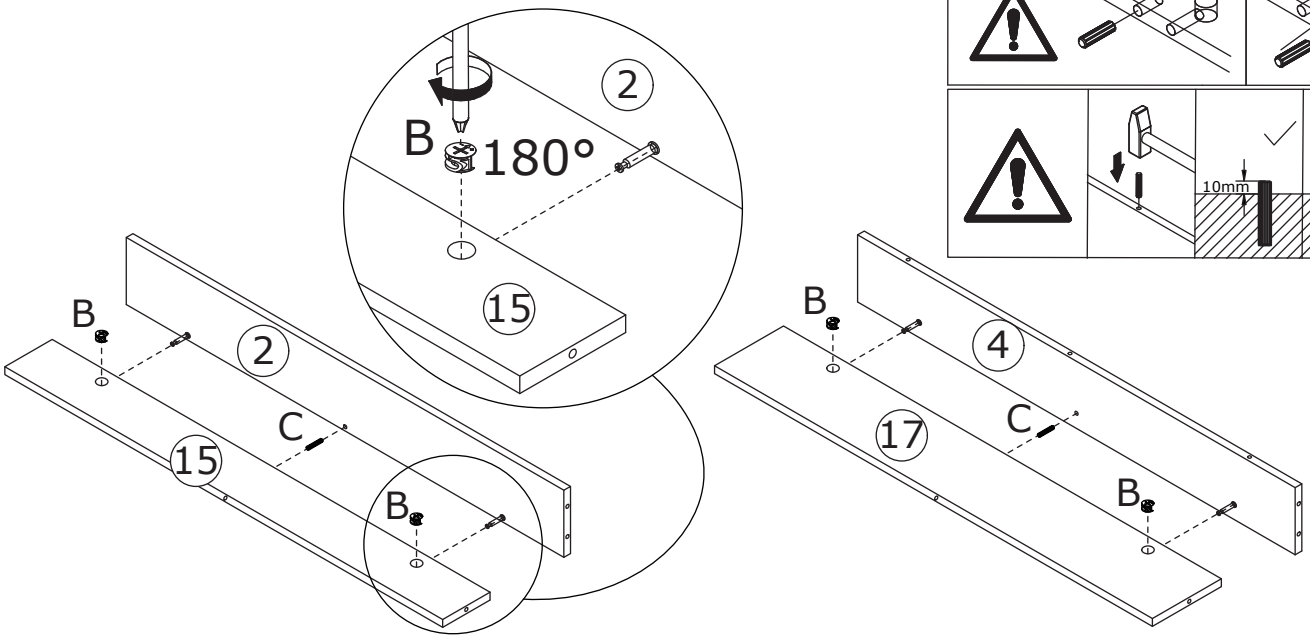

20

B x 3	C x 5	
		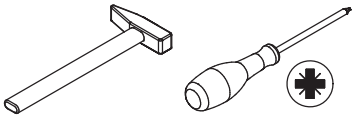
CRB1595A	CRF0830A	

Insert wooden dowel(C) into plate 4,17,2,15 and 35 at first, attach to plate 8 as shown.
Put cam lock(B) into holes in plate 2,4,35 and turn clockwise to tighten as shown.

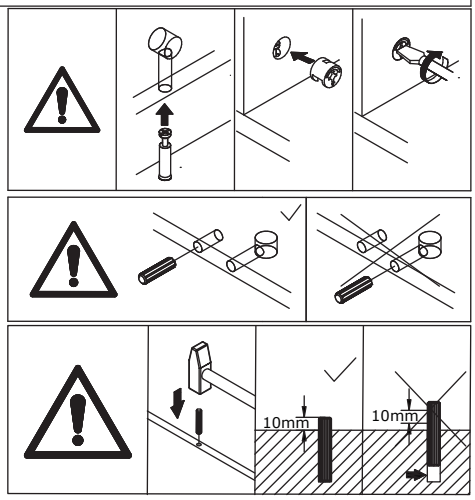

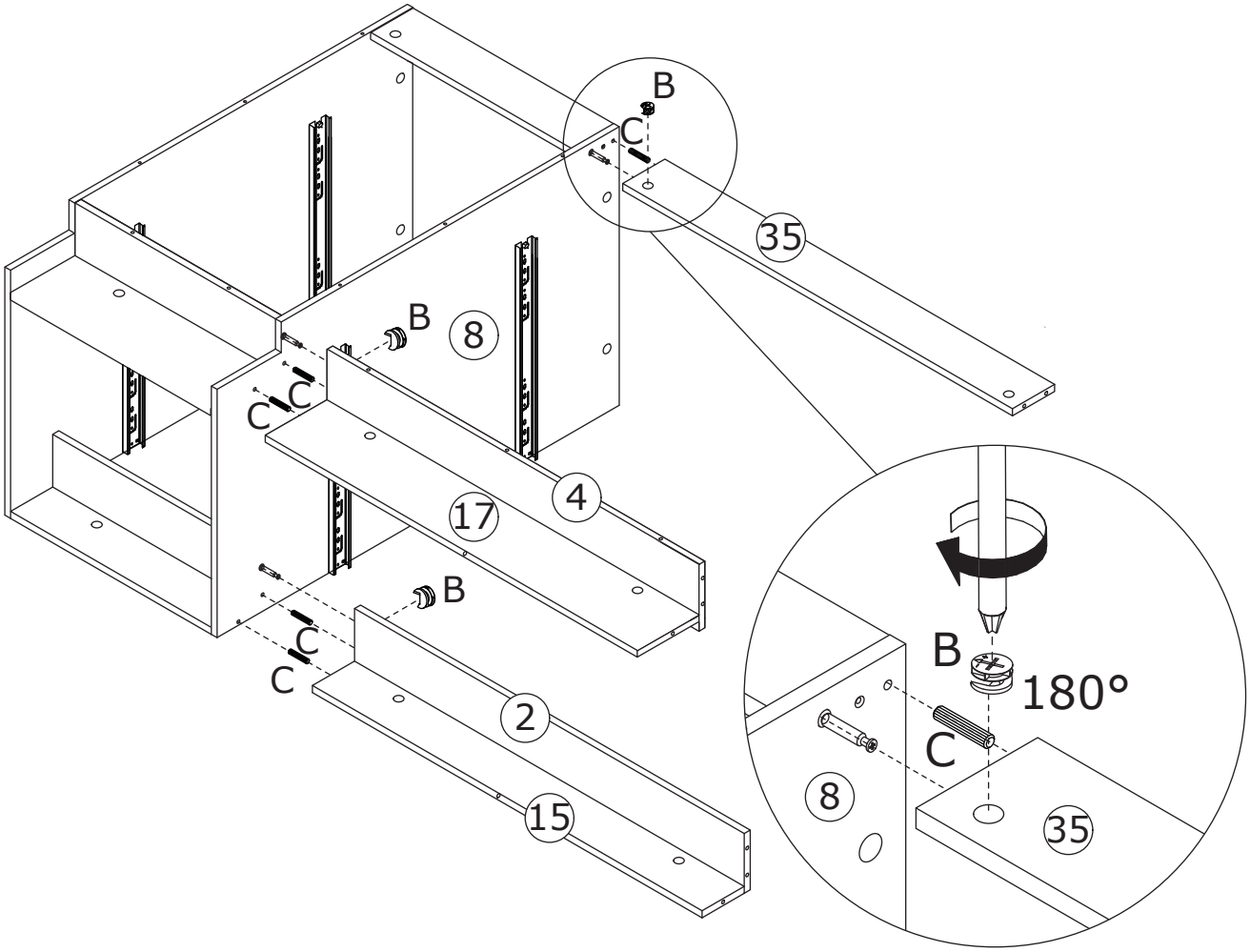

21

B x 3	C x 5	
CRB1595A	CRF0830A	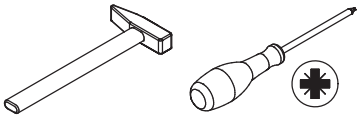

Insert wooden dowel(C) into plate 4,17,2,15 and 35 at first, attach to plate 6 as shown.
Put cam lock(B) into holes in plate 2,4,35 and turn clockwise to tighten as shown.

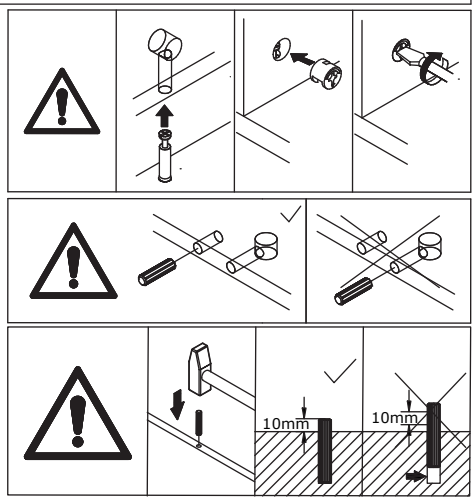

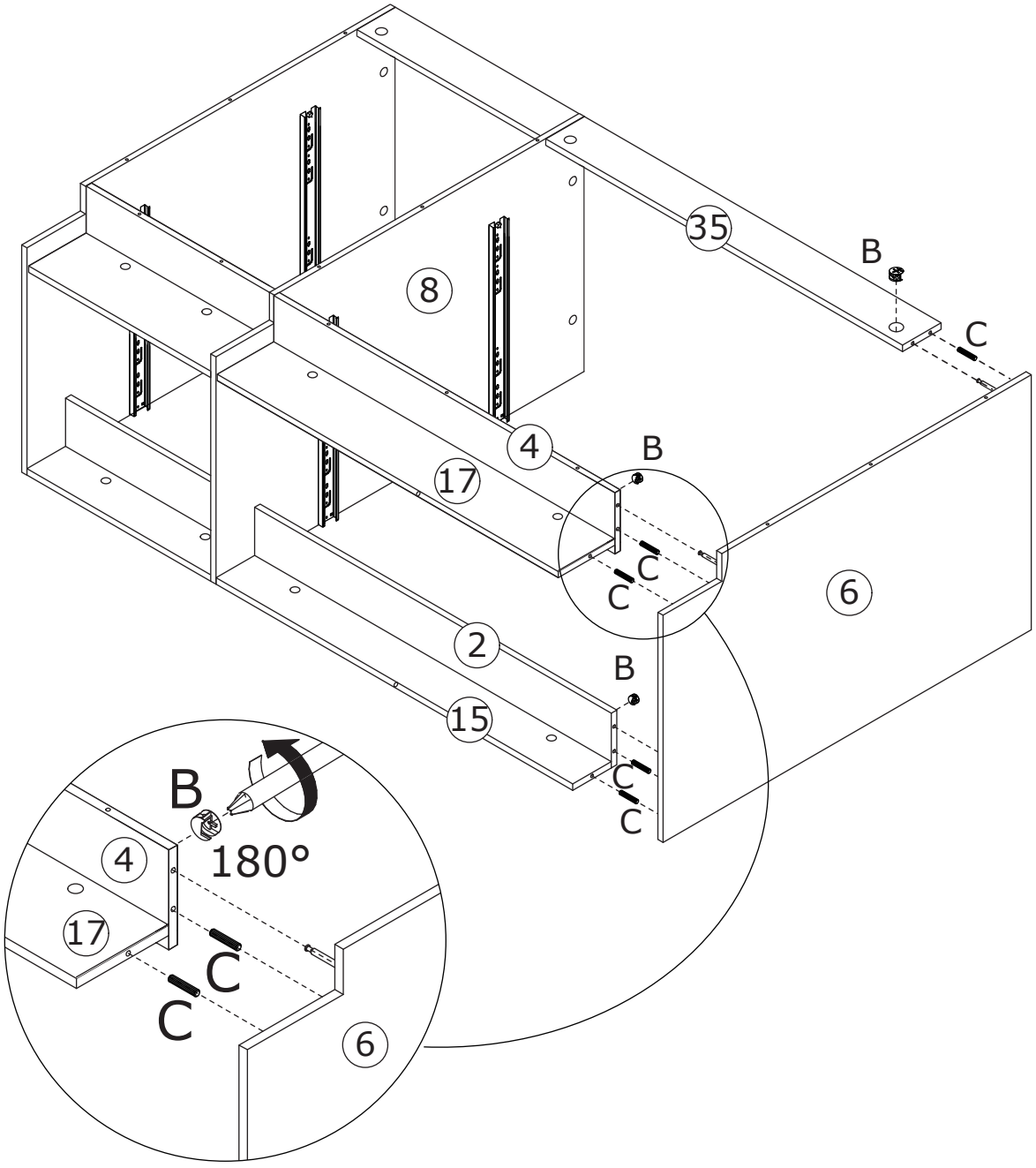

22

B x 6	C x 6
CRB1595A	CRF0830A

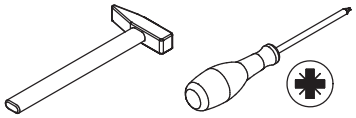

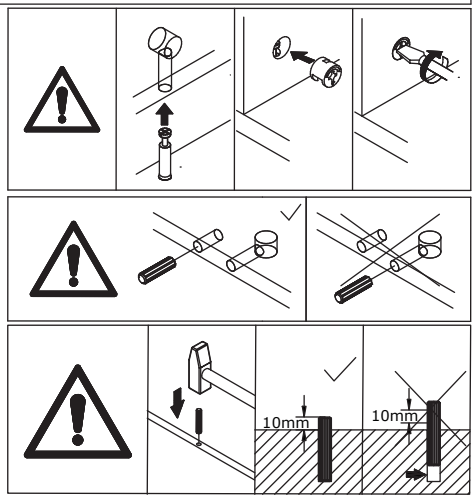

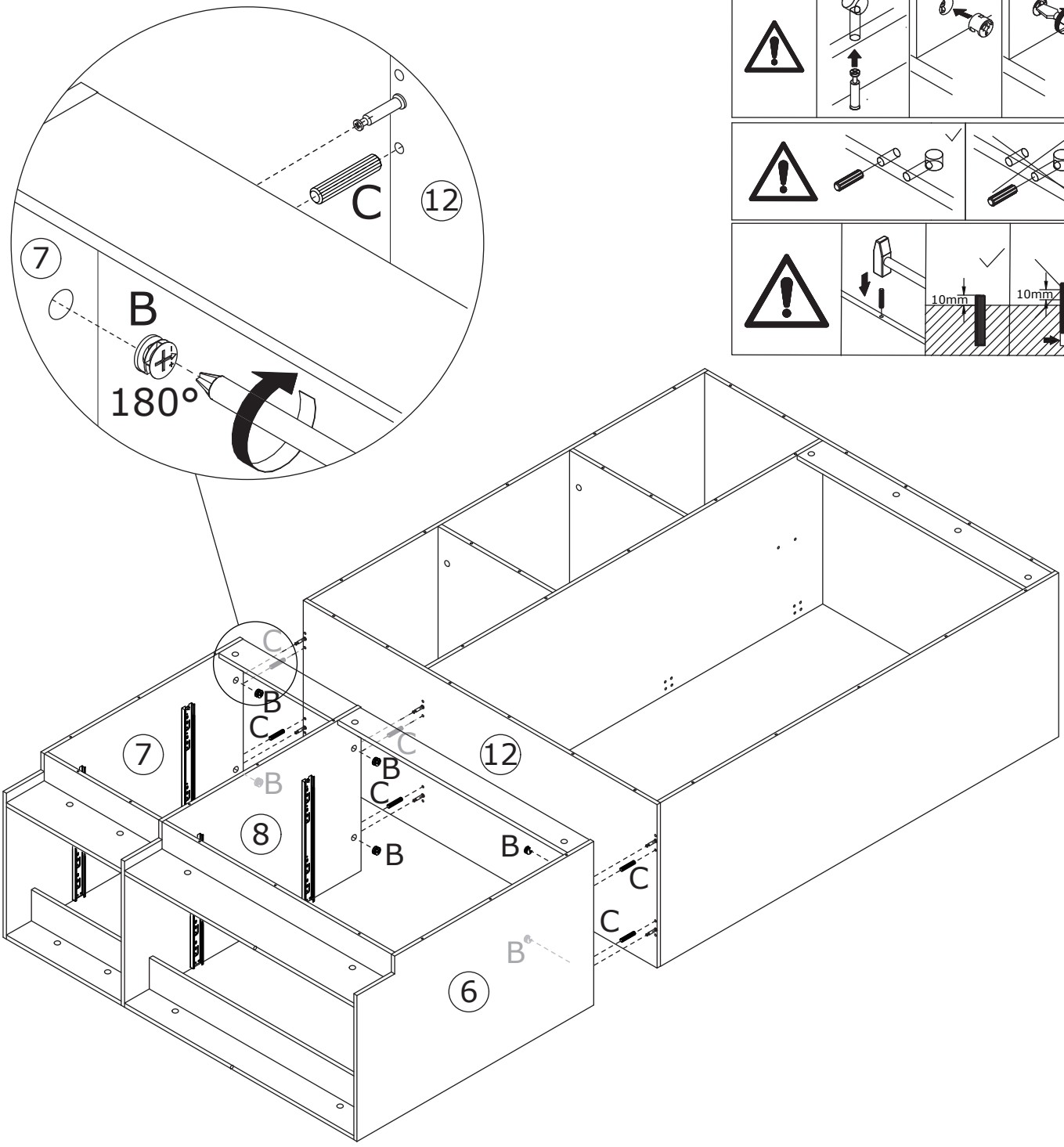

Insert wooden dowel(C) into plate 7,8 and 6 at first, attach to plate 12 as shown.
Put cam lock(B) into holes in plate 6,7,8 and turn clockwise to tighten as shown.

23

F x 34	G x 11	H x 11	I x 2	L x 12	
CRE0312A		CRD0314A		CRD3514A	

Fix back plate 26,27,28 and 29 with screw(F) as shown.
Use iron sheet(G) to fix each plate together with screw(H) as shown.
Fasten each plate together using fittings(I) and screw(L) as shown

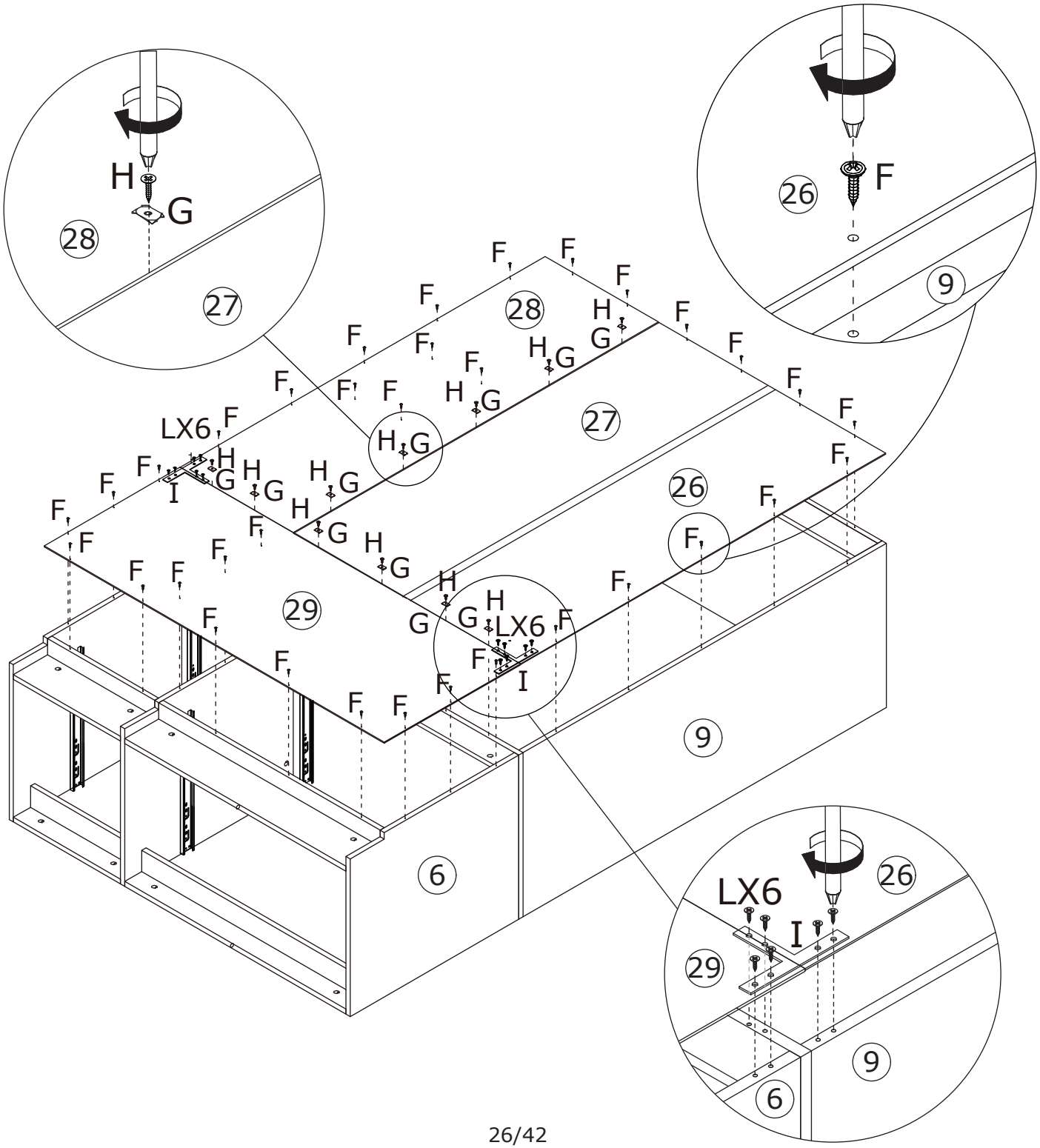

24

A x 4

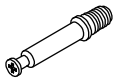

CRA0635A

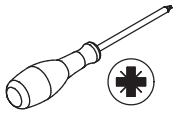

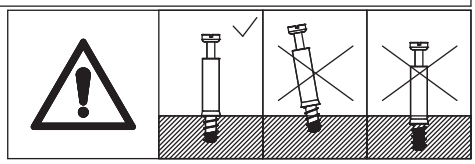

Insert quickfit screw(A) into plate 33 as shown.

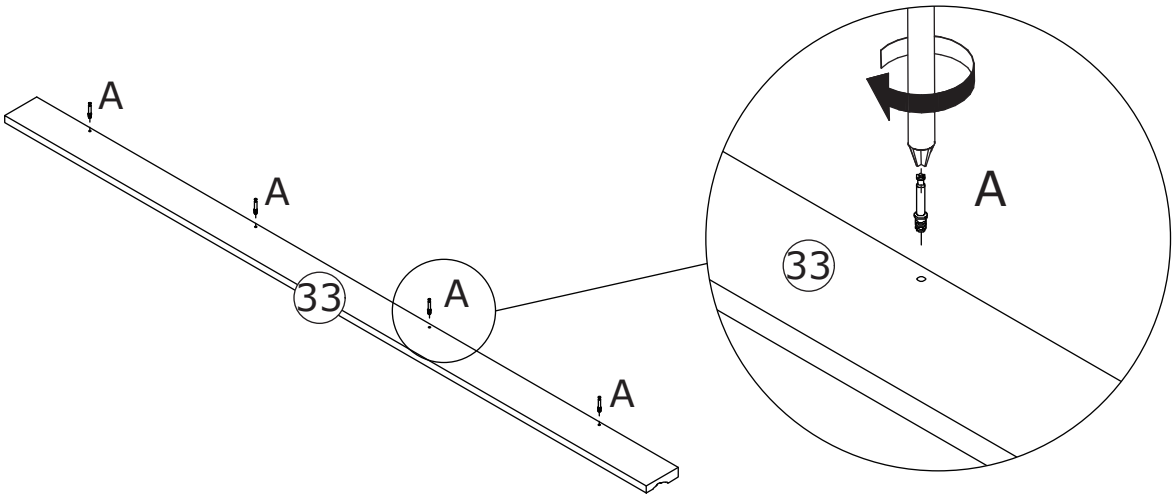

25

B x 4

CRB1595A

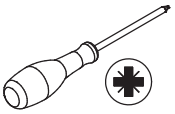

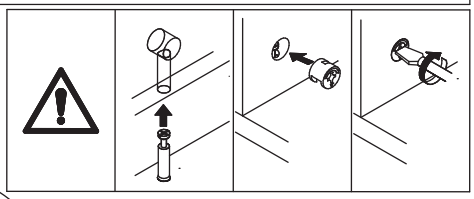

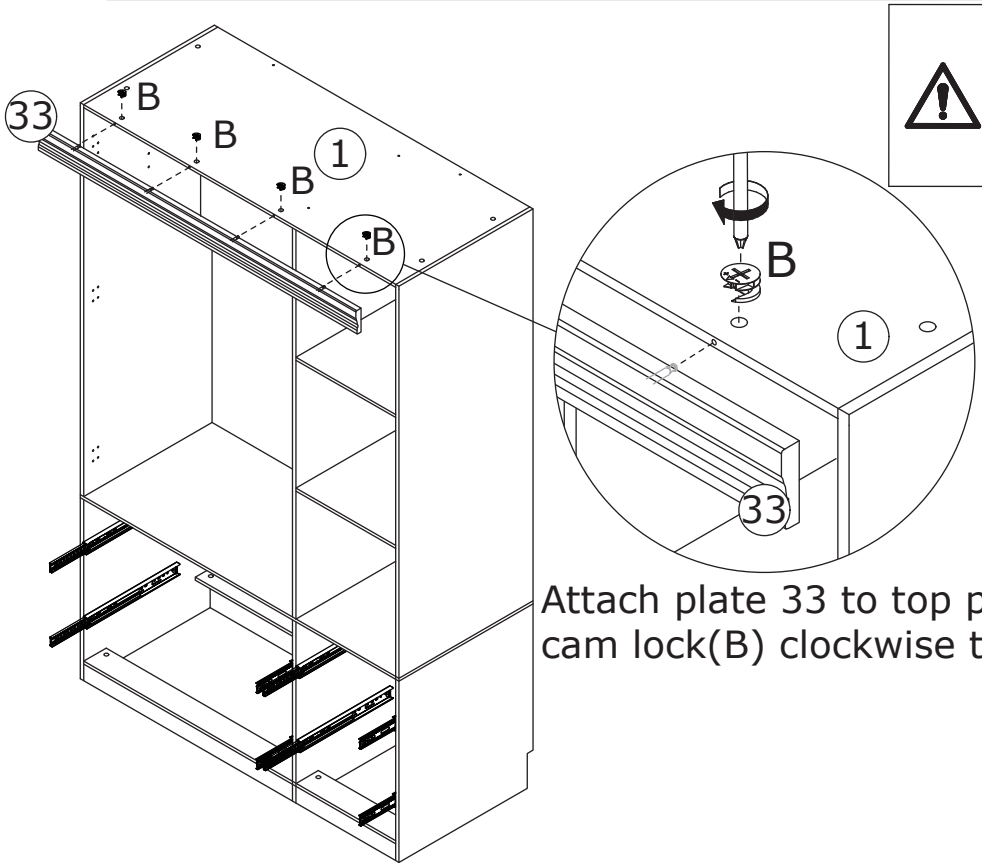

Attach plate 33 to top plate, and turn cam lock(B) clockwise to tighten as shown.

26

L x 4	R x 2	S x 1	
CRD3514A			

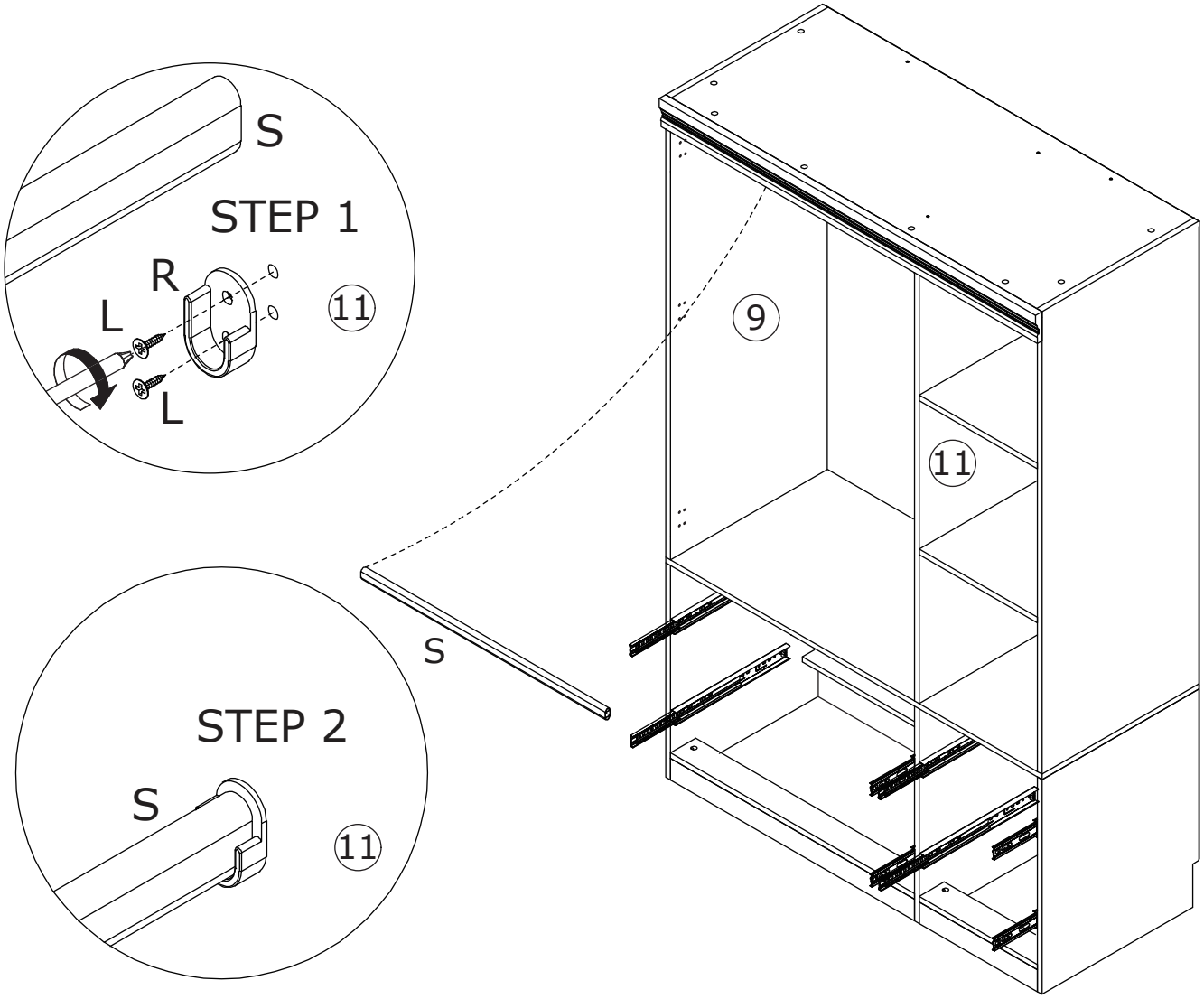

Fix part(R) to plate 9 and 11 with screw(L), place clothing rod(S) as shown.

27

Pay attention to the difference between the middle parts of the two types of door hinges.

- The full coverage door hinges(J) are used on the outermost door plates
- And the curved door hinges(K) are used on the door panel in the middle of the cabinet.

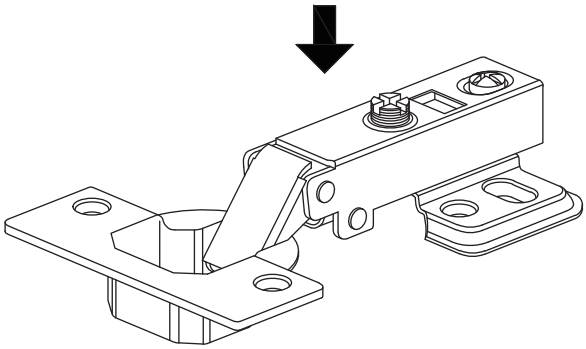

J

Full overlay hinge

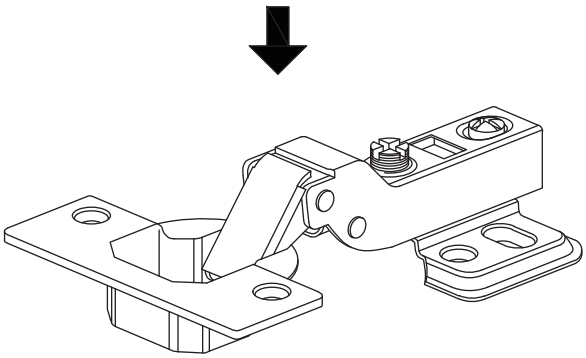

K

Half overlay hinge

28

J x 6	L x 12	
		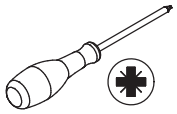
DGA861A	CRD3514A	

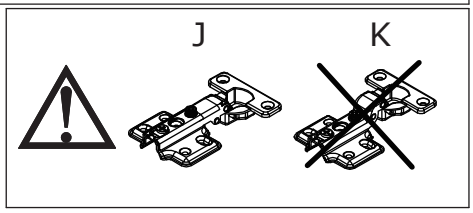

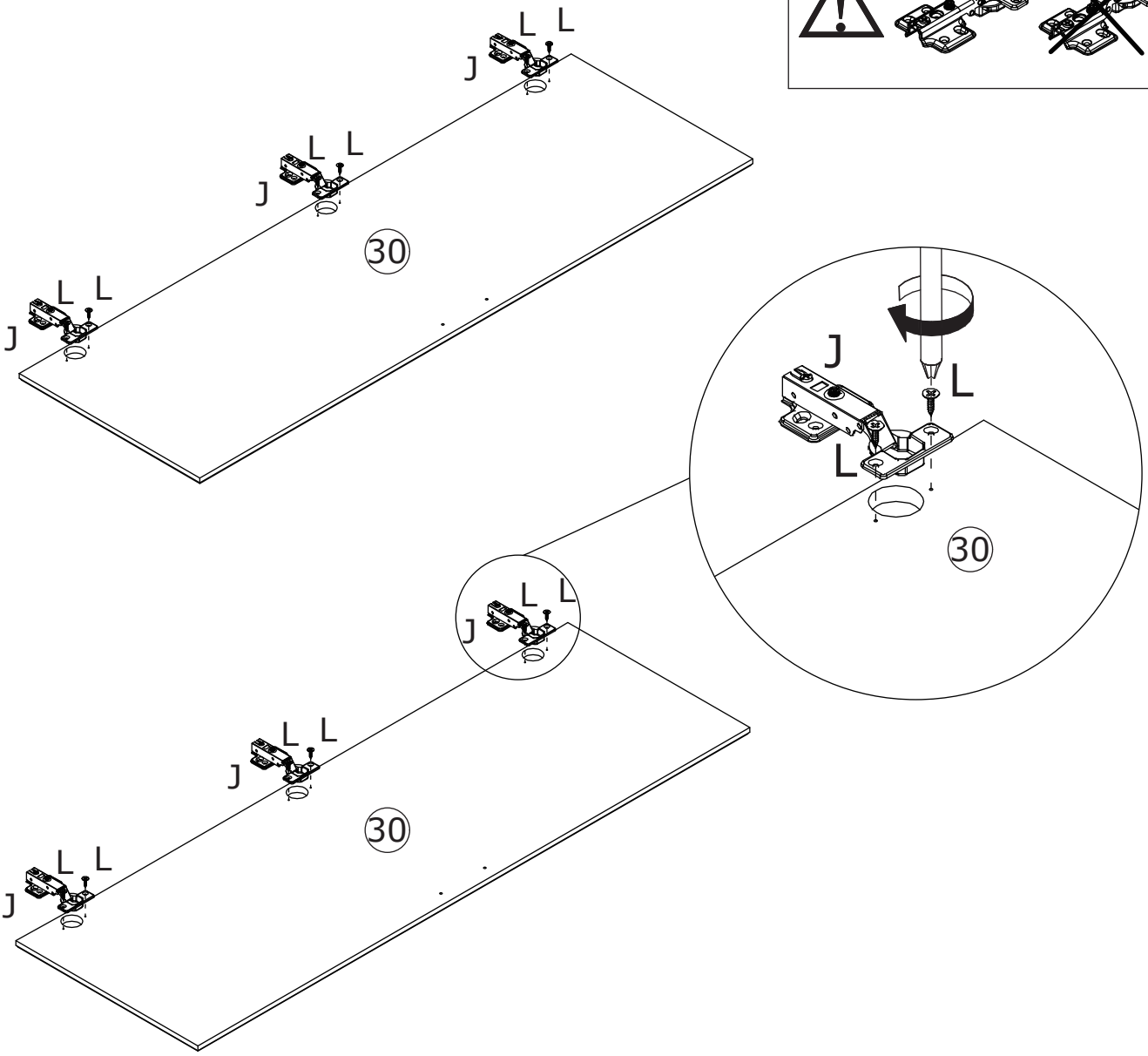

Fix hinge(J) to plate 30(x2) with screw(L) as shown.

29

L x 24	M x 2	N x 4	
CRD3514A		CRE0420A	

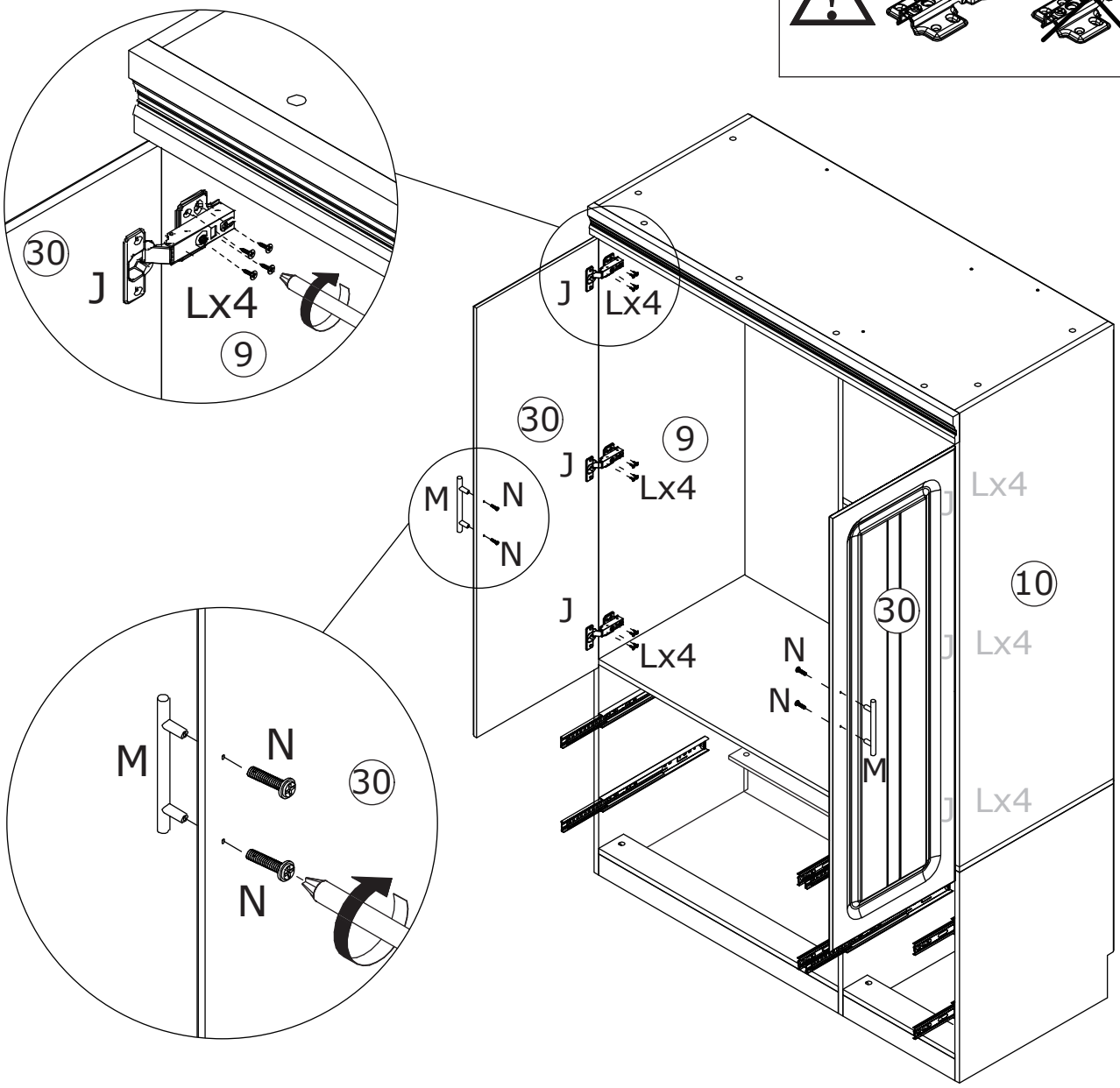

Attach the two door plate to plate 9 and 10 by fixing hinge(J) with screw(L) as shown.
Fix handle(M) with screw(N) as shown.

30

K x 3	L x 6	
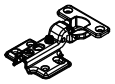 DGA861A	CRD3514A	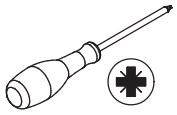

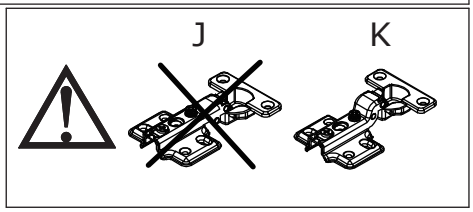

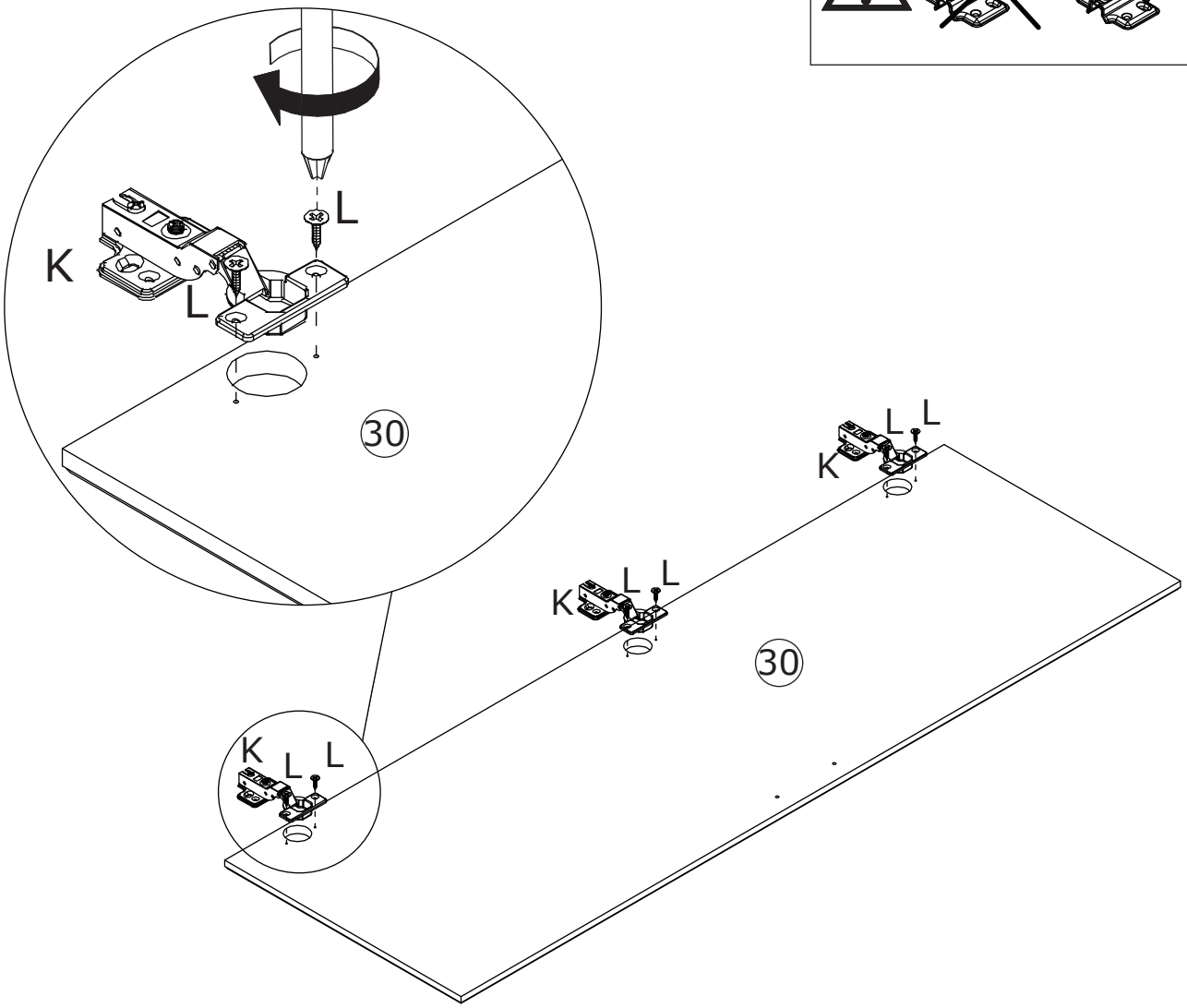

Fix hinge(K) to plate 30 with screw(L) as shown.

31

L x 12	M x 1	N x 2	
CRD3514A		CRE0420A	

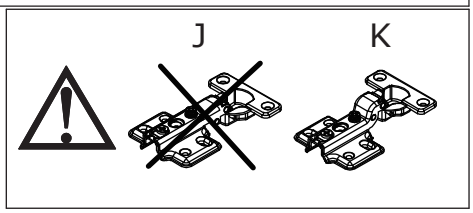

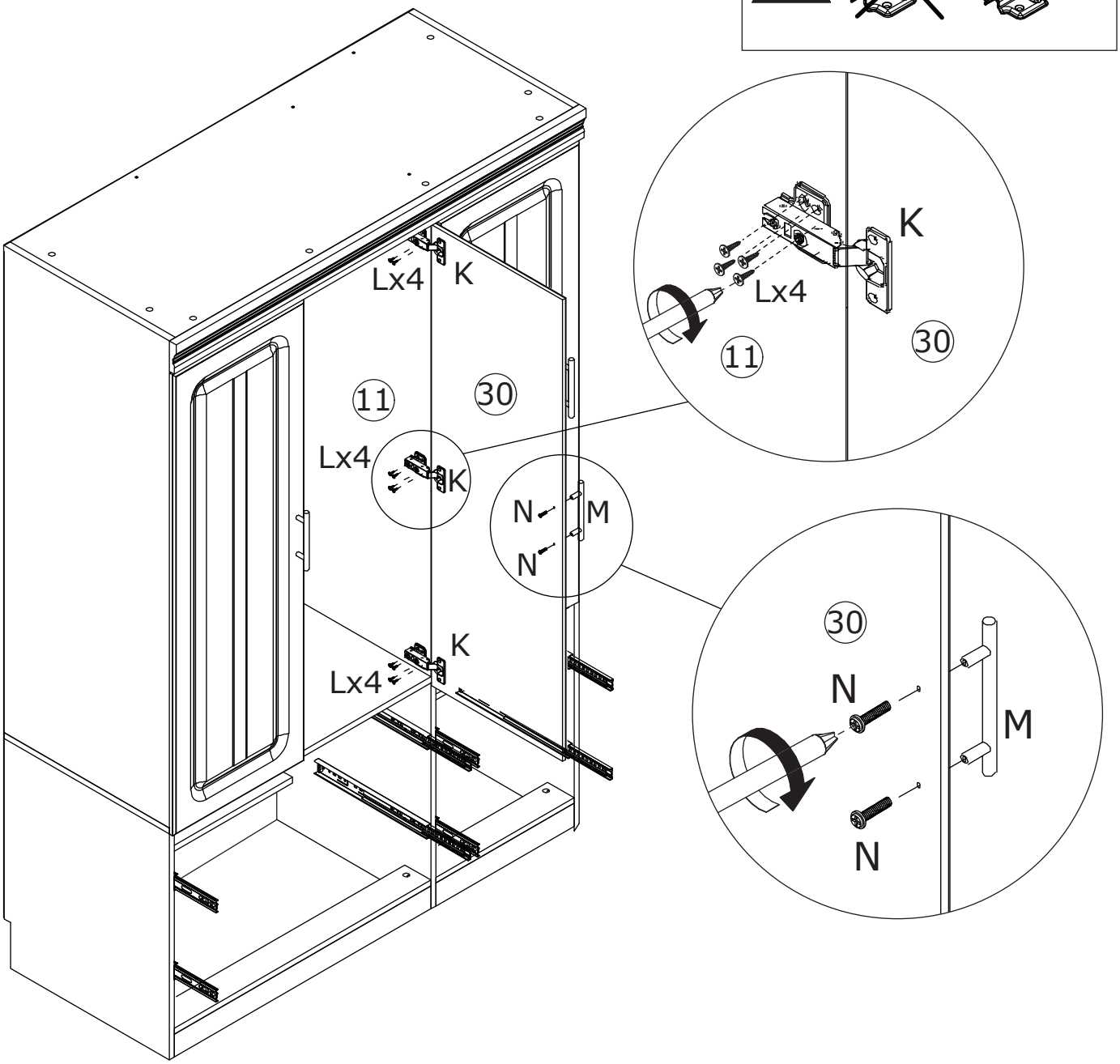

Attach the door plate to plate 11 by fixing hinge(K) with screw(L) as shown.
Fix handle(M) with screw(N) as shown.

32

P x 8	E x 16	
#3508 14″	CRD3512A	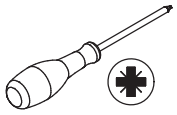

Fix track(P1) to plate 19 and 20 with screw(E) as shown.

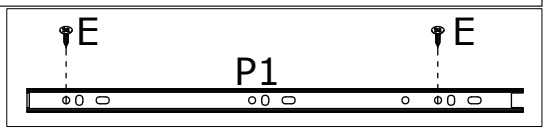

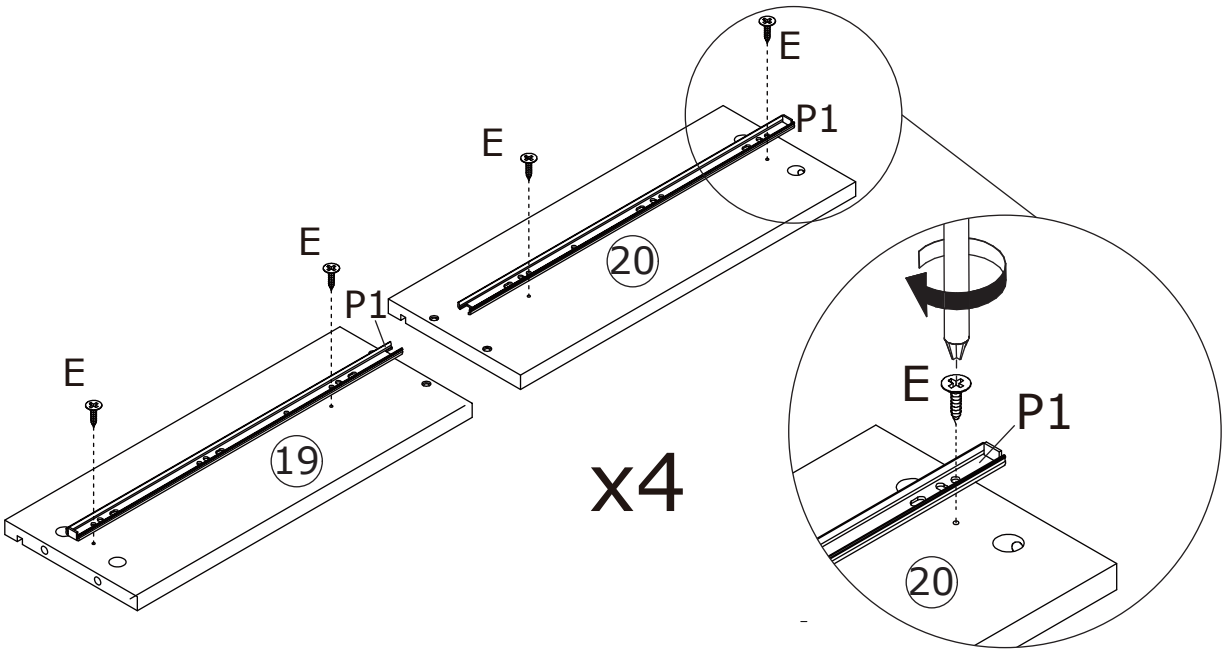

33

A x 10	
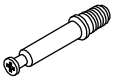 CRA0635A	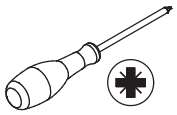

Insert quickfit screw(A) into plate 31 as shown.

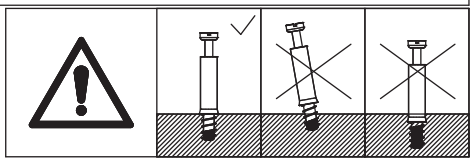

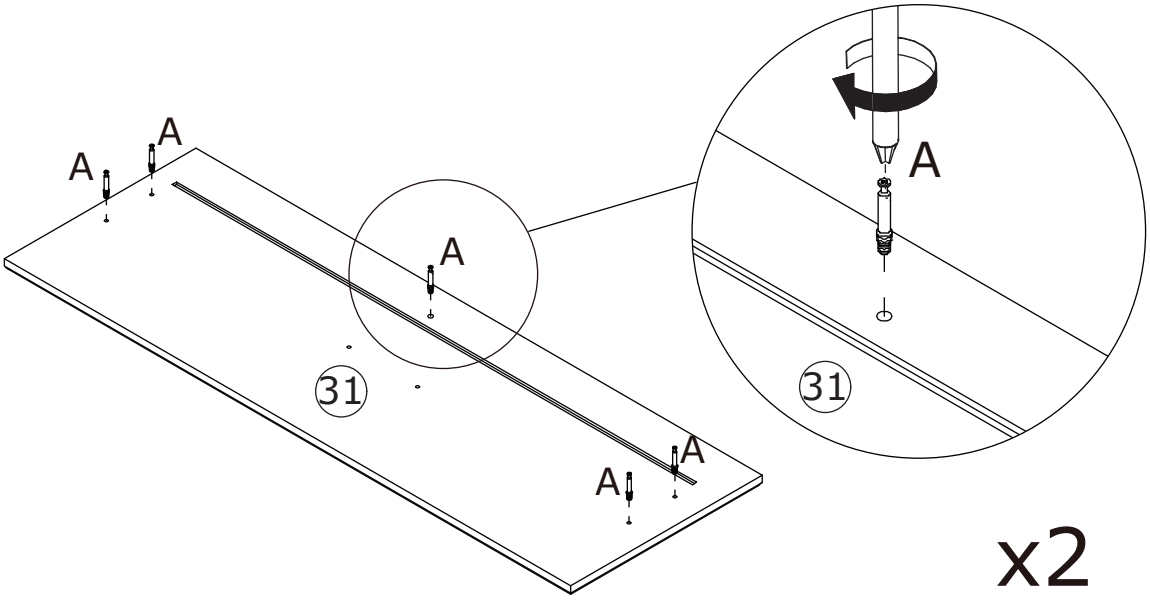

34

B x 10

CRB1595A

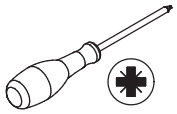

Attach plate 19, 20 and 25 to plate 31 as shown. Put cam lock(B) into holes in plate 19,20,25 and turn clockwise to tighten as shown.

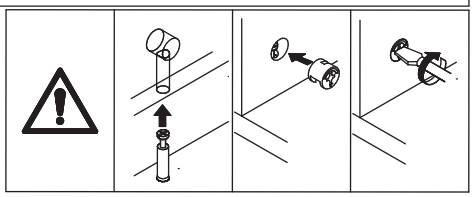

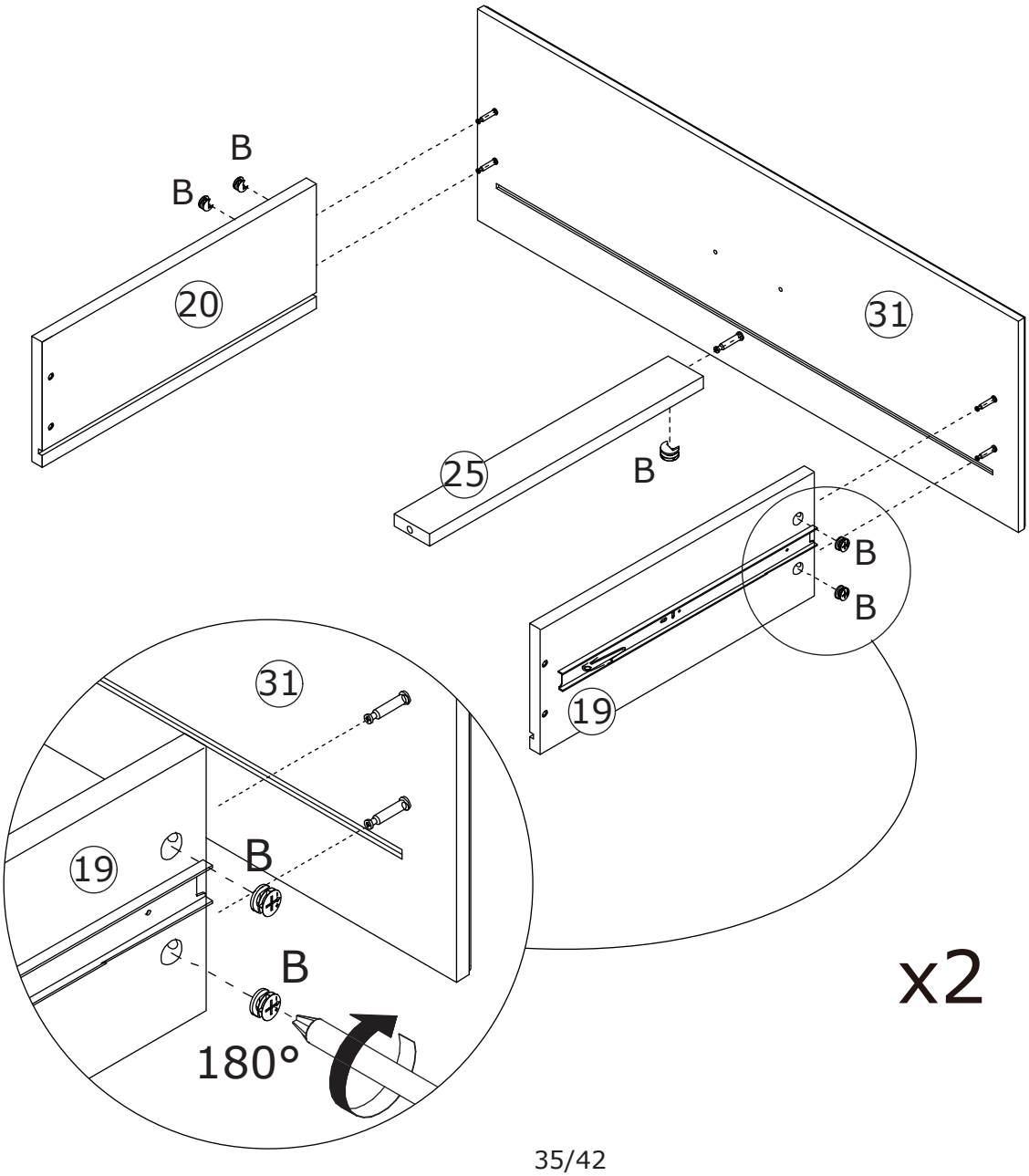

35

Slide plate 23 along grooves as shown.

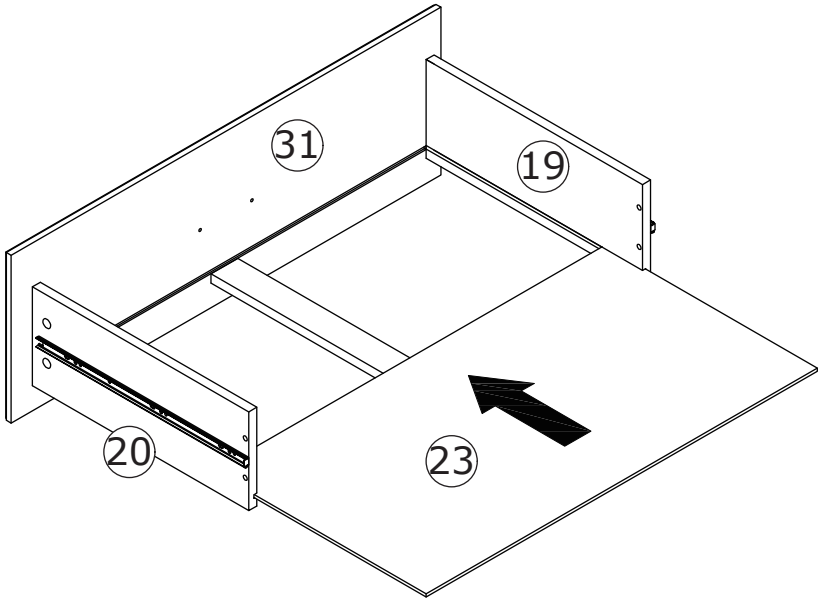

x2

36

D x 2

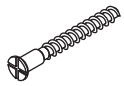

CRC0540A

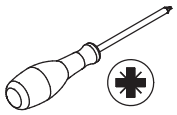

Fix plate 21 to plate 25 with screw(D) as shown.

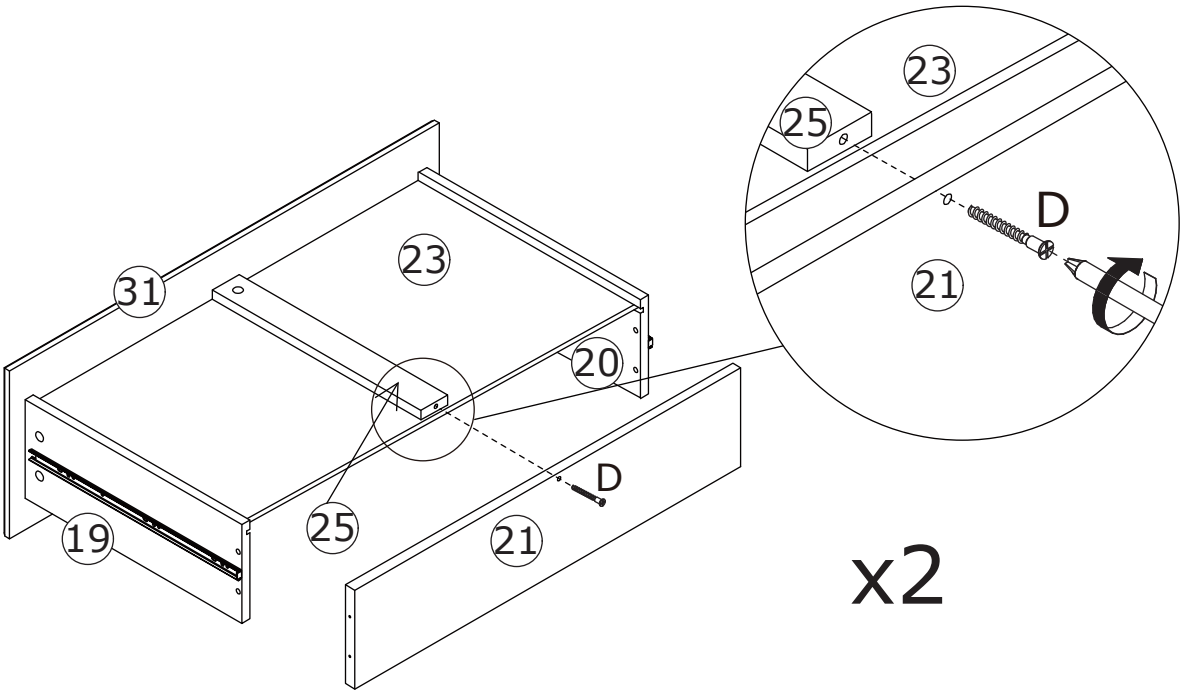

x2

37

D x 8	
CRC0540A	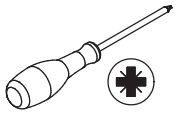

Fix plate 21 to plate 19 and 20 with screw(D) as shown.

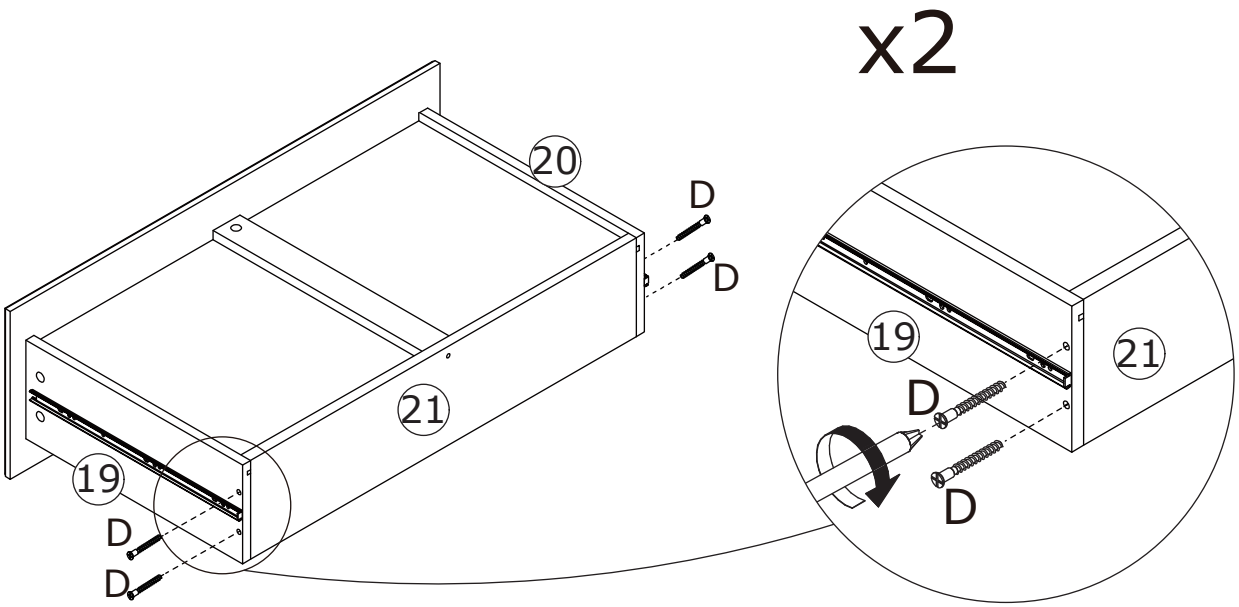

38

M x 2	N x 4	
	CRE0420A	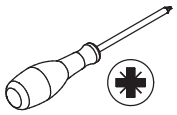

Fix handle(M) with screw(N) as shown.

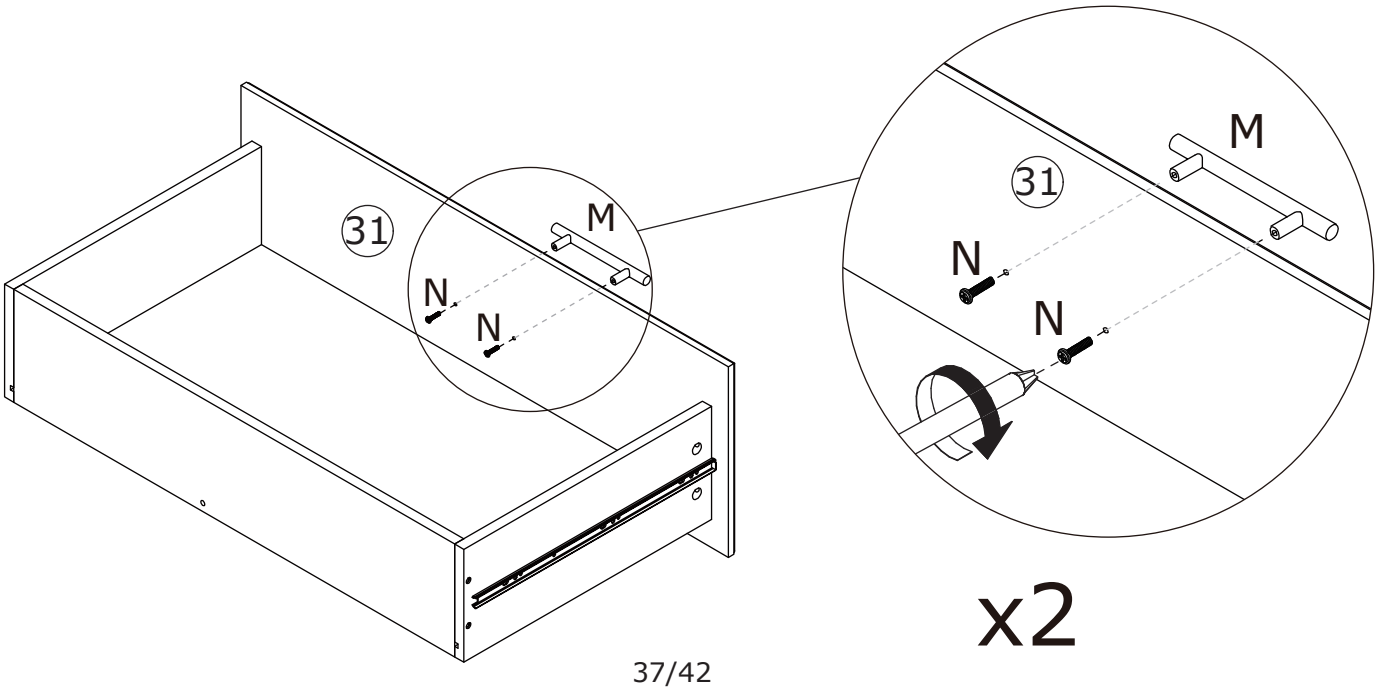

39

A x 8

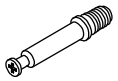

CRA0635A

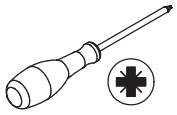

Insert quickfit screw(A) into plate 32 as shown.

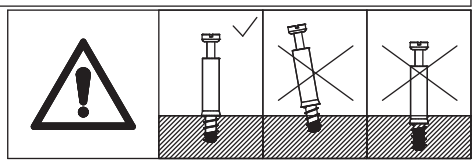

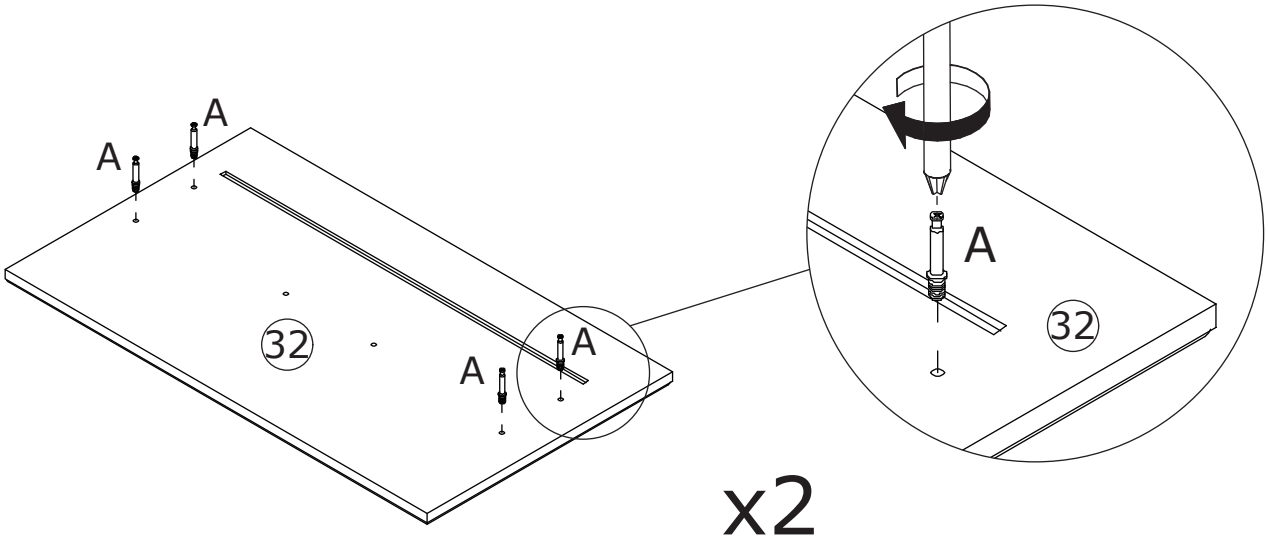

40

B x 8

CRB1595A

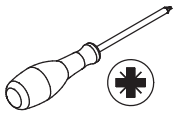

Attach plate 19 and 20 to plate 32 as shown.
Put cam lock(B) into holes in plate 19,20 and turn clockwise to tighten as shown.

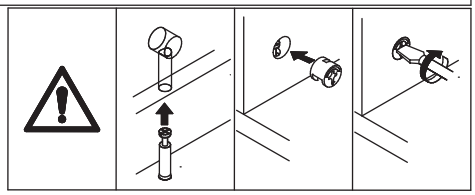

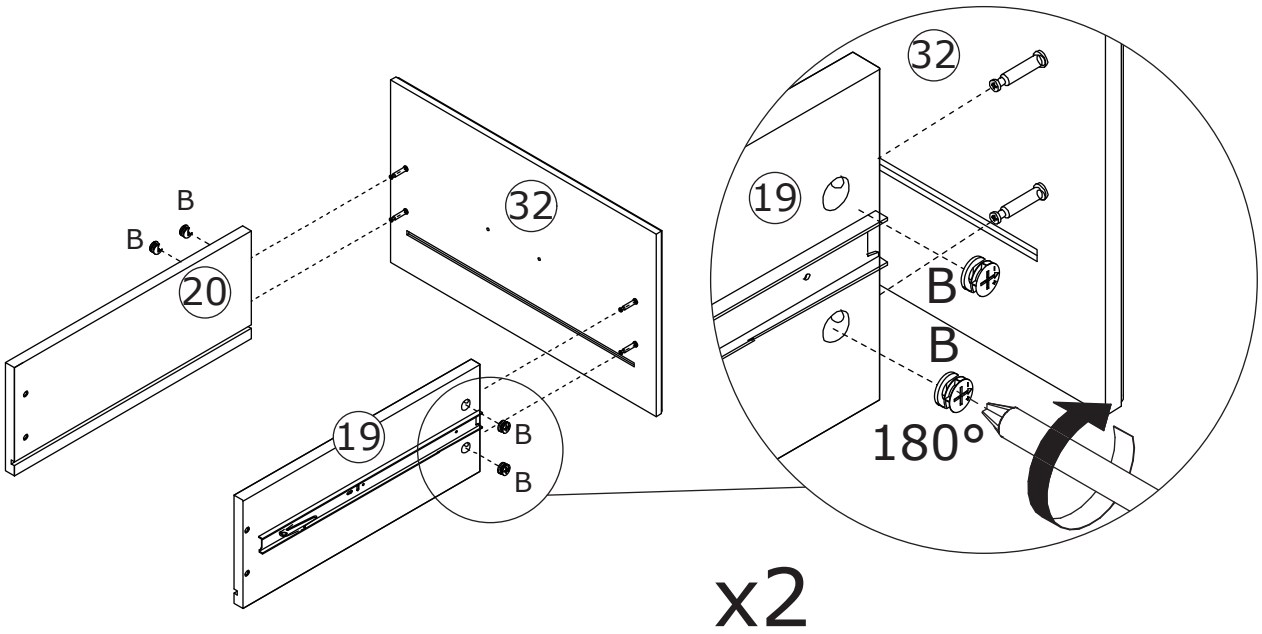

41

Slide plate 24 along grooves as shown.

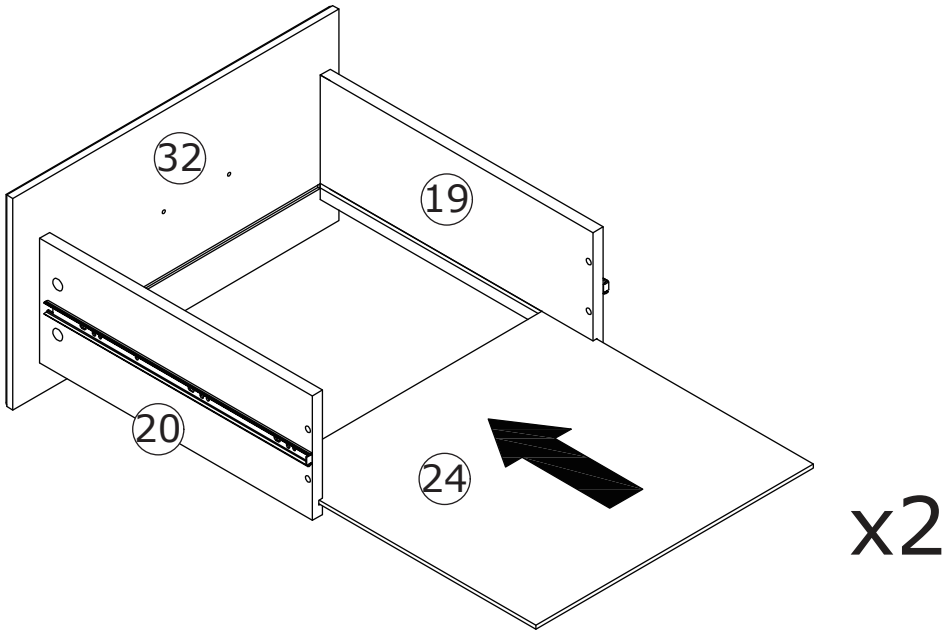

42

D x 8

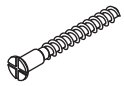

CRC0540A

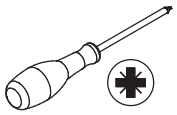

Fix plate 22 to plate 19 and 20 with screw(D) as shown.

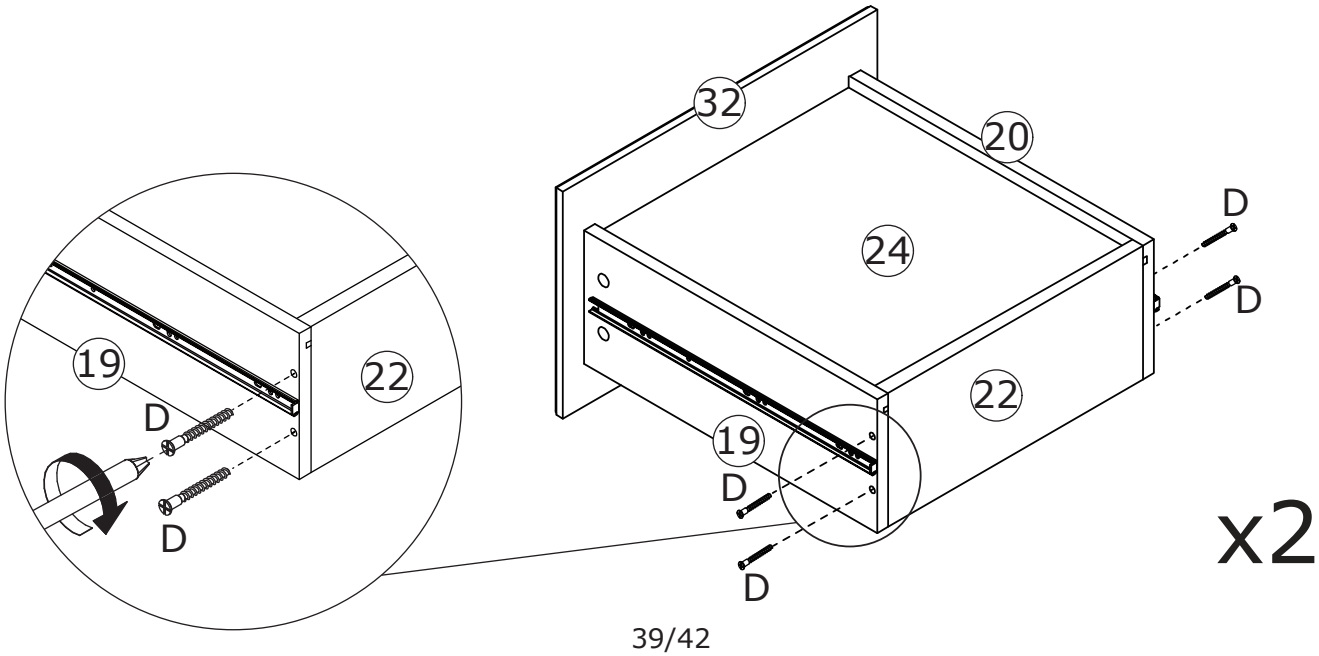

43

M x 2	N x 4	
	CRE0420A	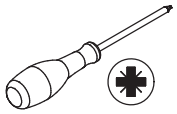

Fix handle(M) with screw(N) as shown.

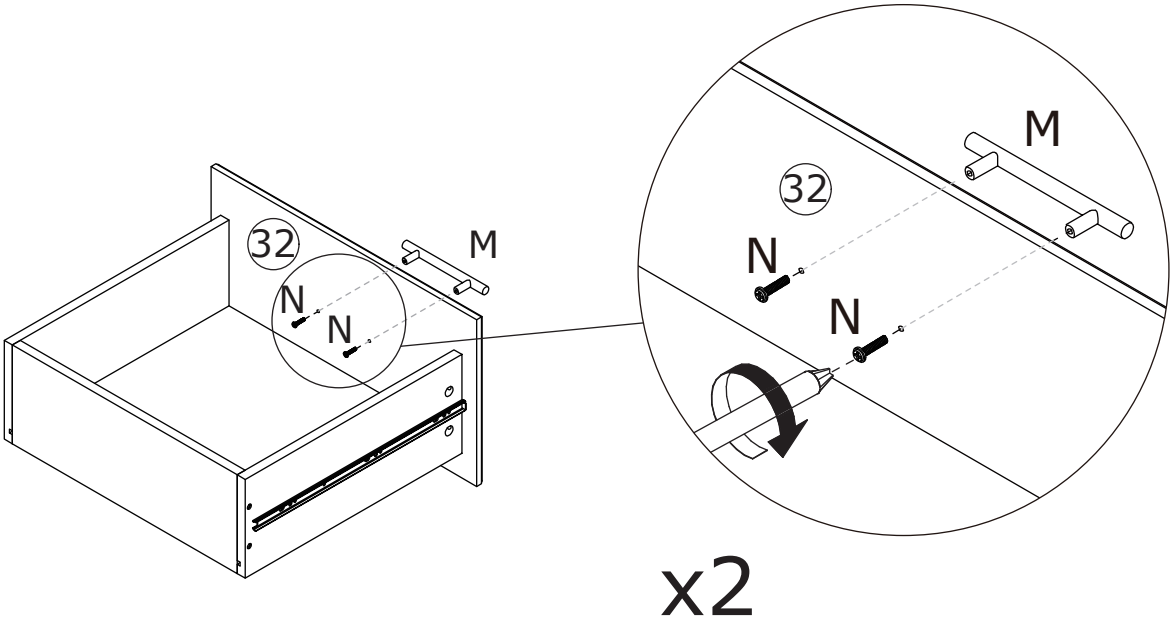

44

Align rails, slide all drawers.

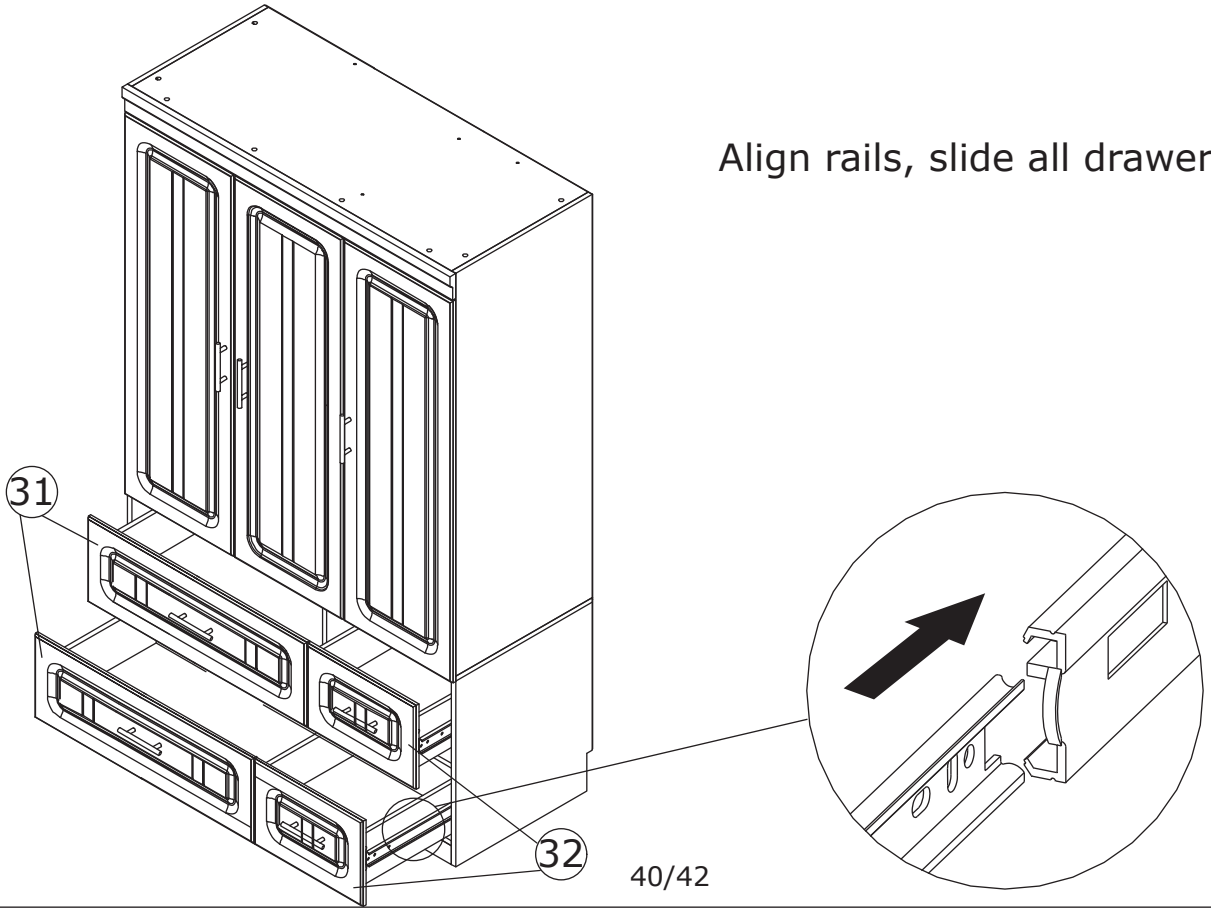

45

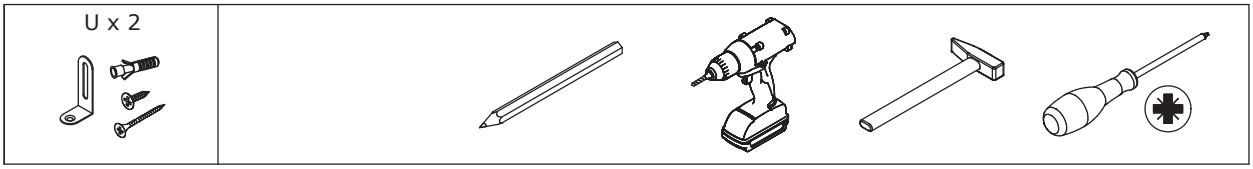

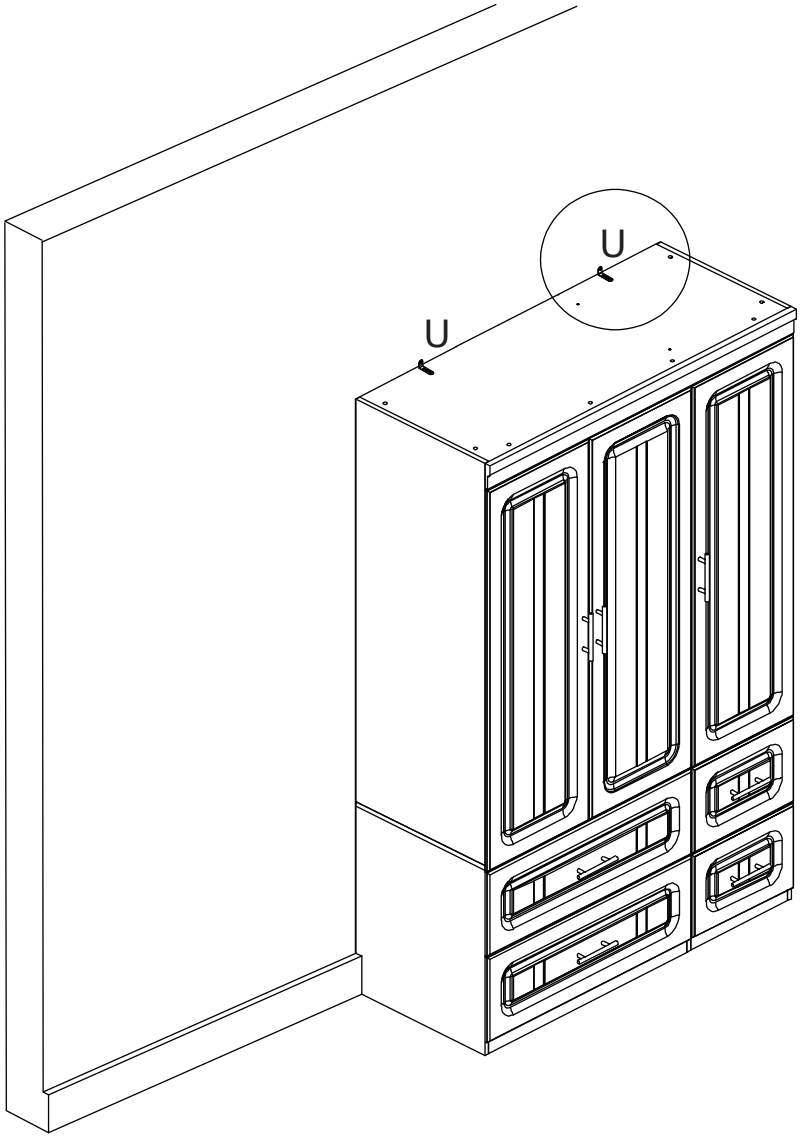

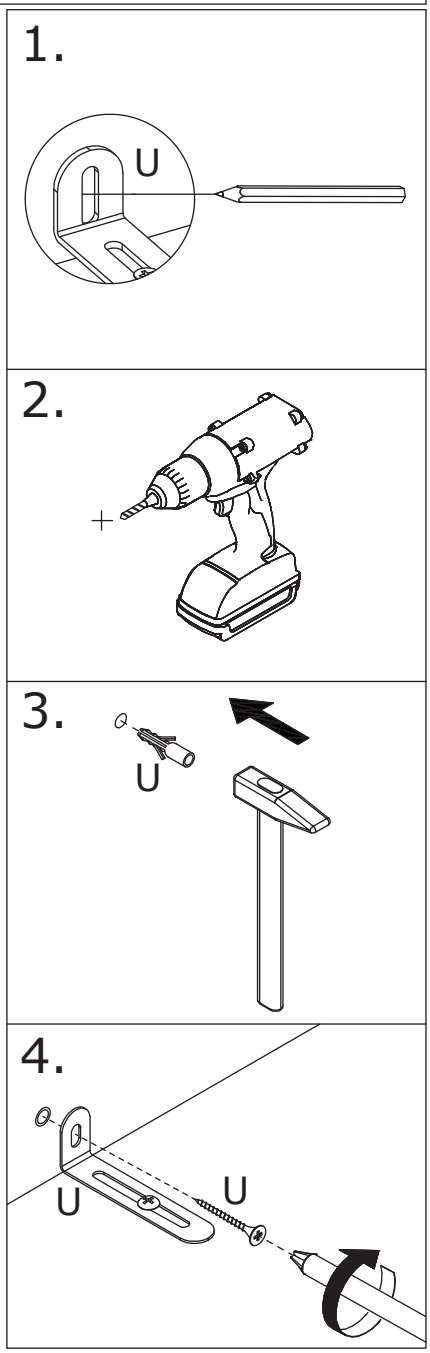

Install anti-tipping device(U) as shown.

46

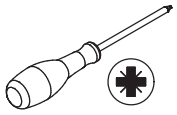

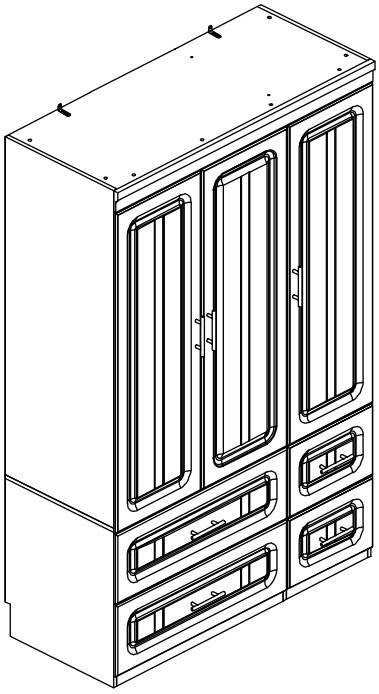

If doors are still not aligned if the hinges are properly correctly, please watch the video.

https://youtu.be/n0Lb36SoODM

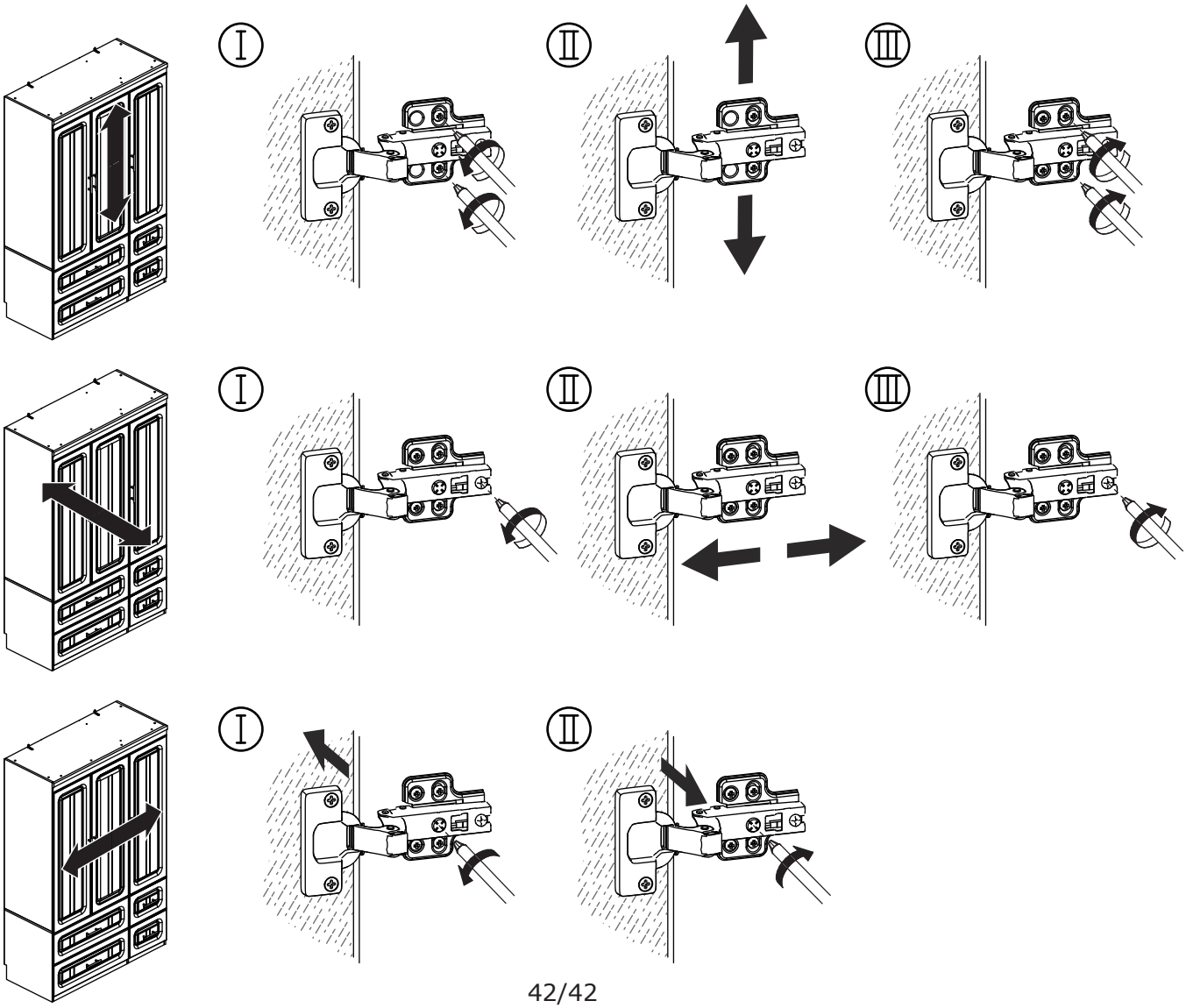

WARRANTY

WARRANTY CLAIMS

•There is a 30-day warranty for broken furniture or any other problems that do not work properly. The warranty will start from the date of purchase which must be verified by proof of purchase.

•Before making a claim, we may be able to answer your query, simply call us. Please leave your purchase order number, along with some details of the problem, if you want a replacement part. We will arrange within 48 hours. If there is out of stock, we will reply with a shipping date.

•The product must be used in accordance with the instructions provided. For health reasons.

•For other reasons, if the furniture needs to be returned, it must be cleaned and dried and operated within 30 days of receipt.

Type of Warranty Claim

•Failure to follow the furniture instructions will invalidate the warranty. Attention please.

•Does not include damage during installation, but includes damage during transportation.

Scope of responsibility

•Shall not bear any responsibility for misuse or user damage and / or loss of parts during the installation of furniture.

•After using, the damage and scratches of the furniture are not covered by the warranty.

The Warranty Relates to All Bought in The Us and Covers The Following Areas

•Sheet parts: 1 month from the date of purchase.

•Electrical parts: 1 month from the date of purchase.

RETURNS

CHANGED YOUR MIND AND NEED TO RETURN YOU ITEM?

PLEASE FOLLOW THE BELOW INSTRUCTIONS:

- If you have purchased and have simply changed your mind, follow the retailer's instructions for returns.

DEFECTIVE ITEMS

- If your item is defective in any way, i.e. it doesn't work but you can't identify why, in the first instance, please call us.

DAMAGED ITEMS

- If you receive an order with obvious shipping damage from the retailer, then we suggest the delivery is refused. If the delivery has been accepted and then shipping damage is found, please follow the specific instructions advised by the retailer.
  In all circumstances please save all packaging material and paperwork for the order. Please be aware that if you dispose of packaging material or attempt to return the merchandise without contacting the fulfiller, you jeopardise your chances of making a claim, and you may not receive a credit for the return.

AFTER-SALES CONTACT

adelahu@fufugaga.com

208-820-0068

INSTALLATION
Product Manual

Version: 250022US-03-25A-AA

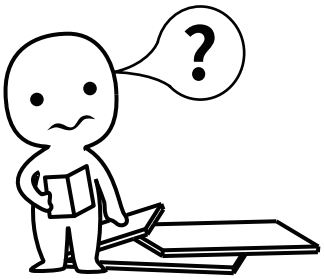

IMPORTANT INFORMATION!

please read the entire manual before starting to assemble and/or using this product.follow the manual thoroughly and keep it for further reference.

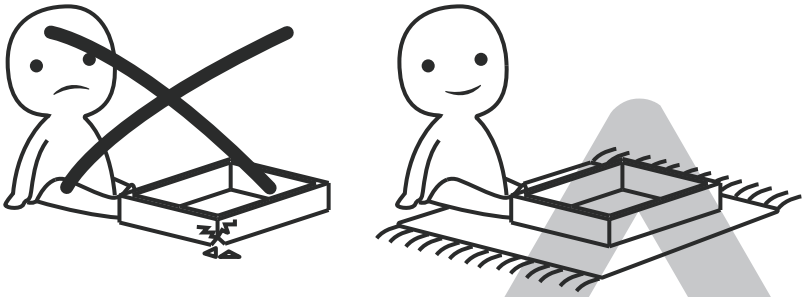

AVOID SCRATCHES!

In order to avoid scratching this furnuture should be assembled on a soft layer-could be a rug.

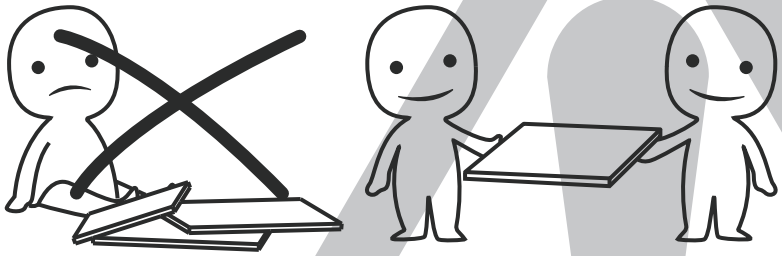

IMPROVE EFFICIENCY !

Try to find a partner to install with you, which can speed up the installation efficiency and shorten the time.

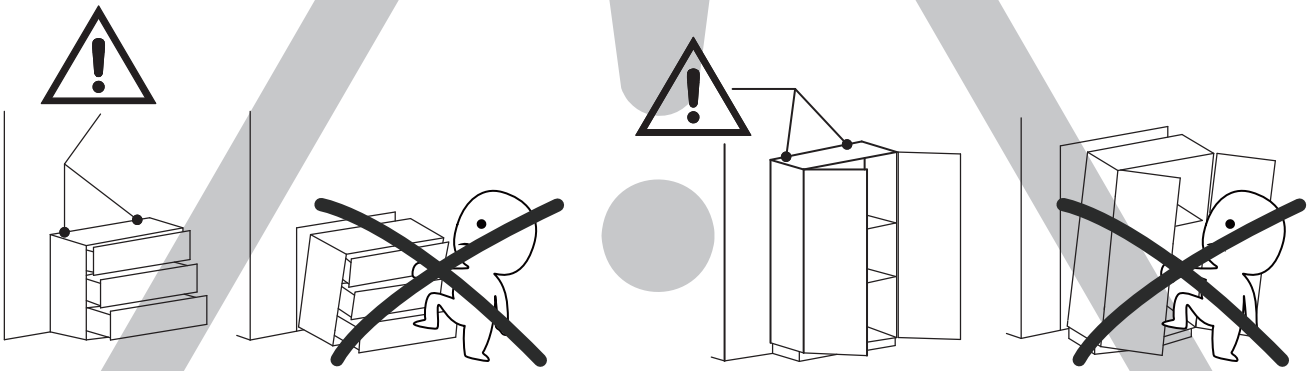

ANTI-TOPPLE WARNING !

Overturned furniture can cause serious or fatal crush injuries. To prevent tipping over, be sure to use the wall attachment, if not included with this product. Please purchase the wall attachment that fit your wall. If unsure, seek professional advice. Please read and follow each step of the instructions carefully.

IMPORTANT !

It is important that any product which is assembled using any kind of screw is re-tightened 2 weeks after assembly,and once every 3 months - in order to assure stability through-out the lifespan of the product.

For regular maintenance and cleaning of the product, for the frame, please use a rag dipped in neutral detergent to fully wipe it, and then dry it with a clean rag.For glass materials, wipe with a rag dampened with water glass cleaner, and then dry with a dry rag.

Do not use an electric screwdriver, and do not use too much force when installing, because the board is easy to break.

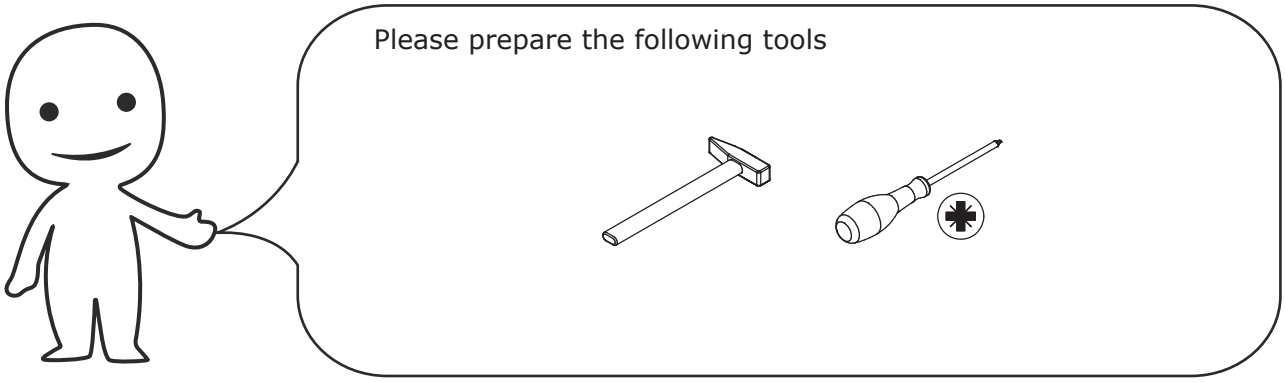

When installing, please carefully confirm whether each screw corresponds to the manual, accessories with similar shapes can be distinguished by size

A x 16	B x 16	C x 8	D x 16
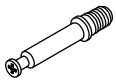		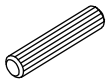	
CRA0635A	CRB1595A	CRF0830A	CRE0314A

E x 2	F x 4	G x 2	H x 40
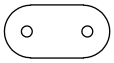	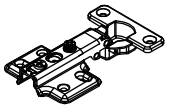	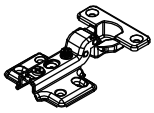	
∅28 x 14 mm	DGA861A	DGA861B	CRD3514A

J x 3	K x 3
∅20 x 23 mm	CRE0420A

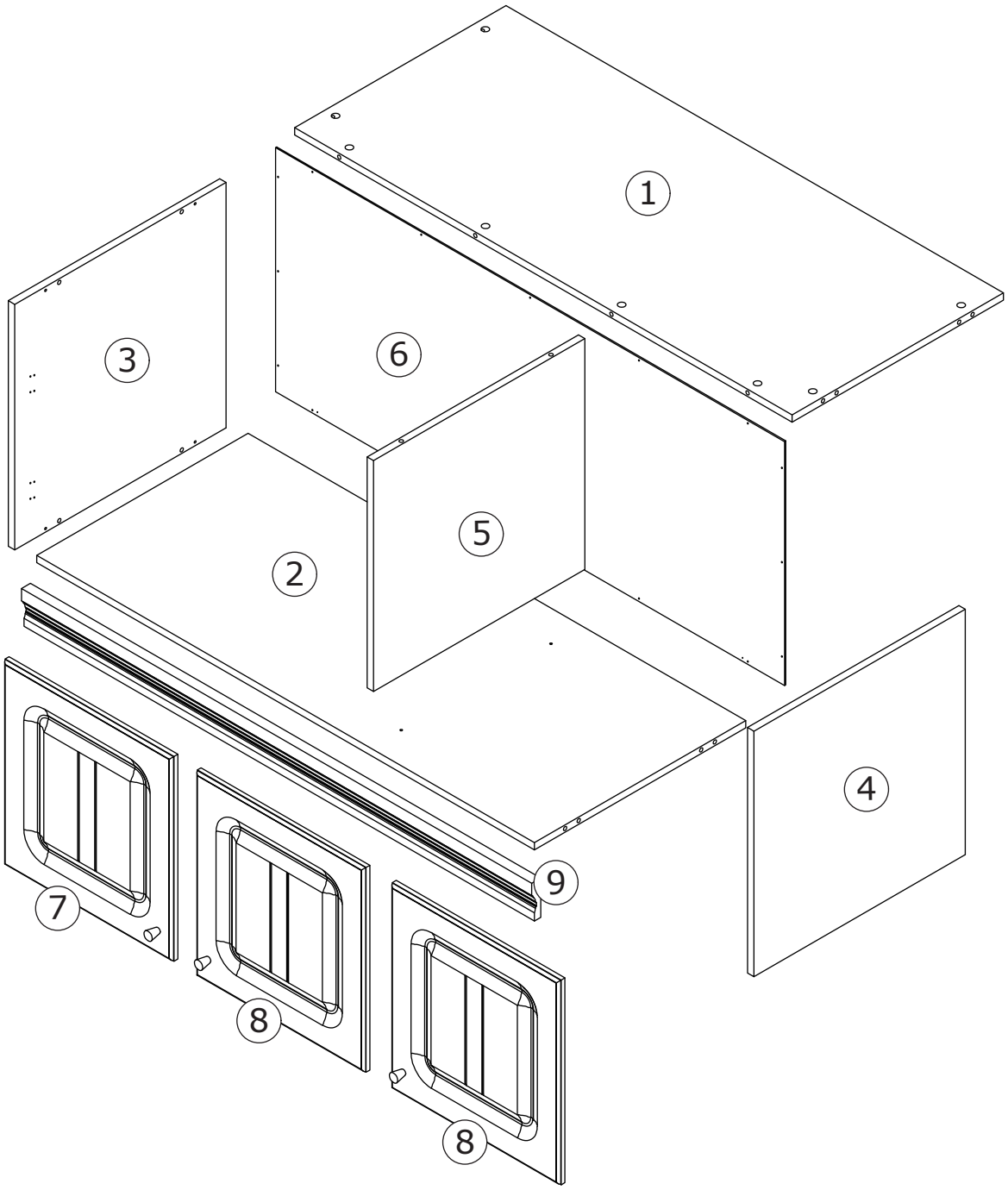

⚠WARNING

Children have died from furniture tipover.To reduce the risk of furniture tipover:

- ALWAYS install Anti-tip device provided.
- NEVER put a TV on this product.
- NEVER allow children to stand,climb or hang on drawers,doors,or shelves.
- NEVER open more than one drawer at a time.
- Place heaviest items in the lowest drawers.

This is a permanent label.
Do not remove!

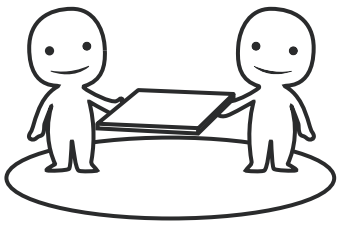

ASSEMBLED BY 2 ADULTS

1

A x 2

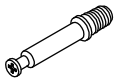

CRA0635A

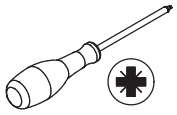

Insert quickfit screw(A) into plate 1 with a screwdriver as shown.

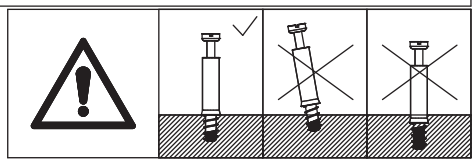

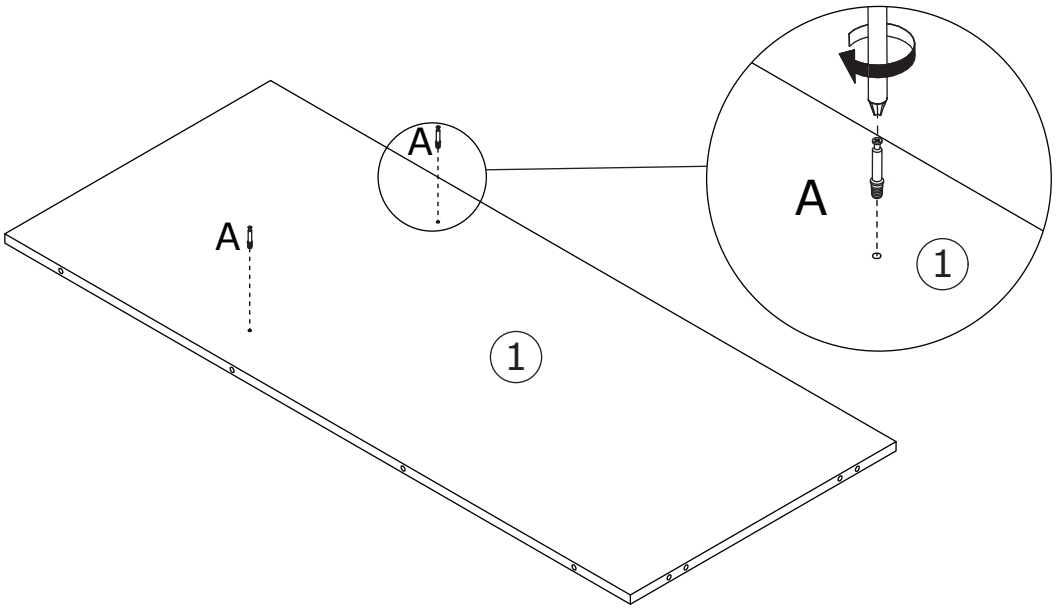

2

B x 2

CRB1595A

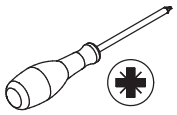

Attach plate 5 to plate 1, put cam lock(B) into holes in plate 5 and turn clockwise to tighten as shown.

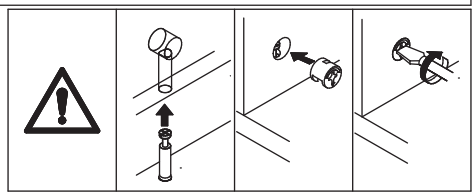

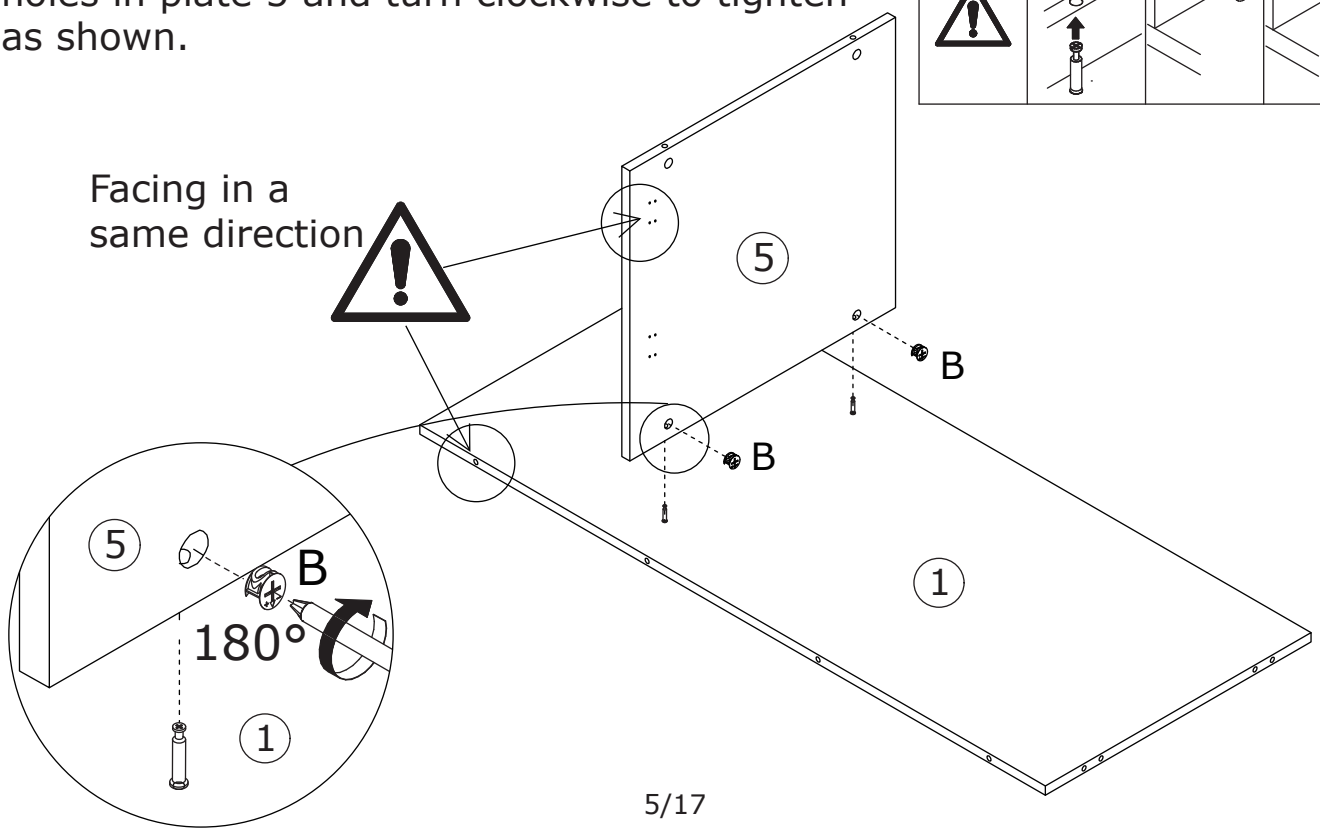

3

A x 2

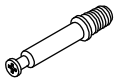

CRA0635A

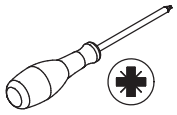

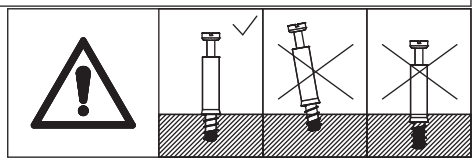

Insert quickfit screw(A) into plate 2 with a screwdriver as shown.

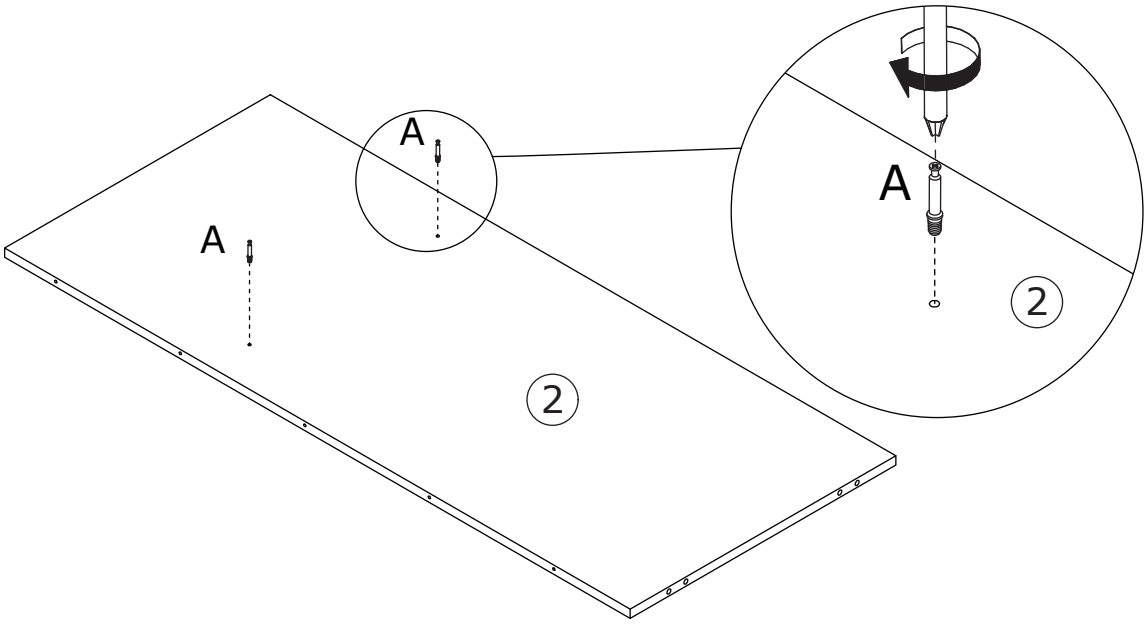

4

B x 2

CRB1595A

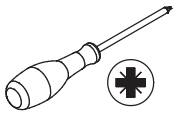

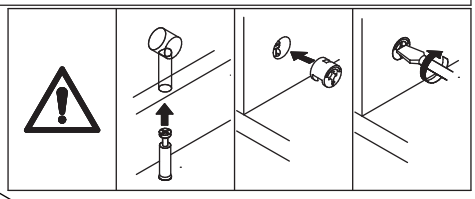

Attach plate 2 to plate 5, put cam lock(B) into holes in plate 5 and turn clockwise to tighten as shown.

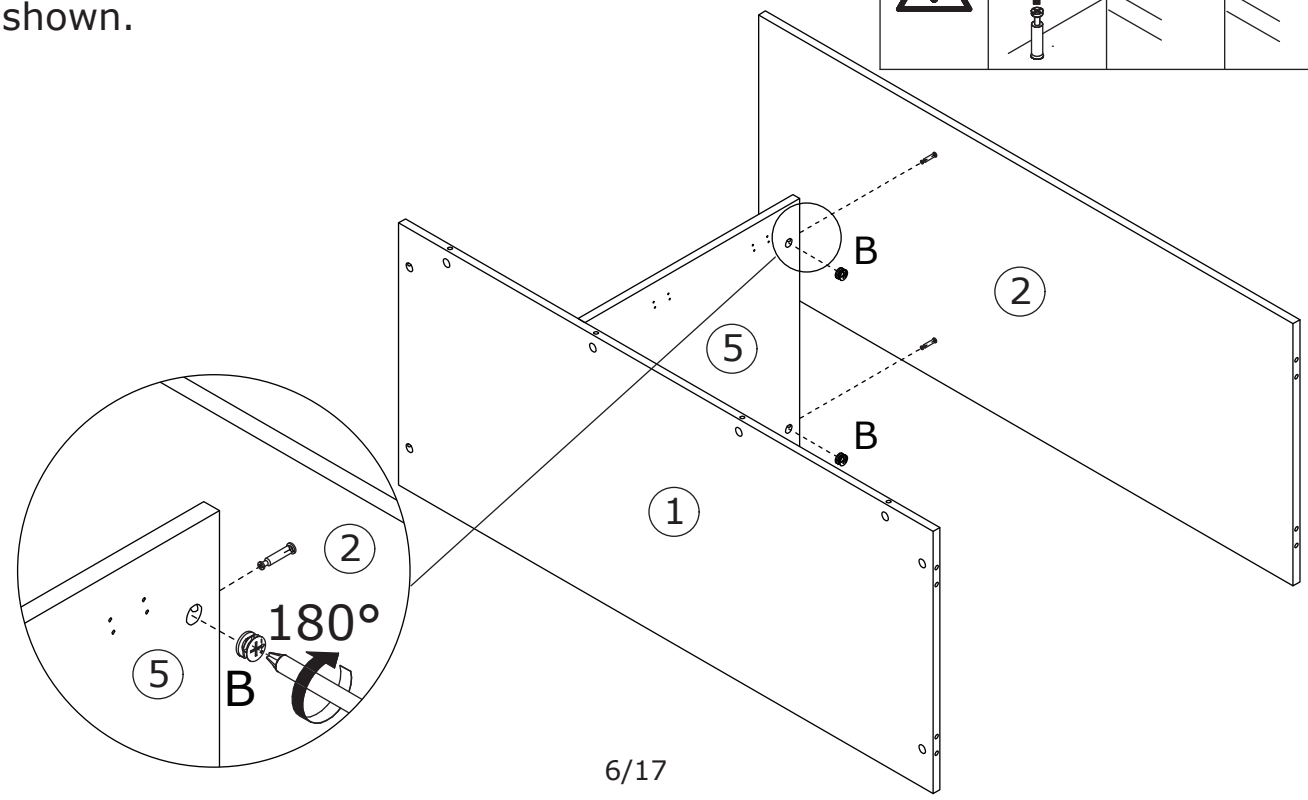

5

A x 8

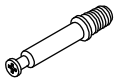

CRA0635A

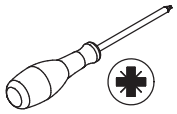

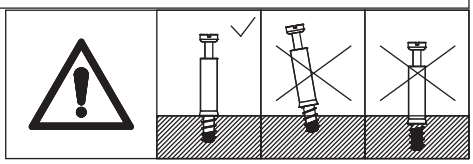

Insert quickfit screw(A) into plate 3 and 4 with a screwdriver as shown.

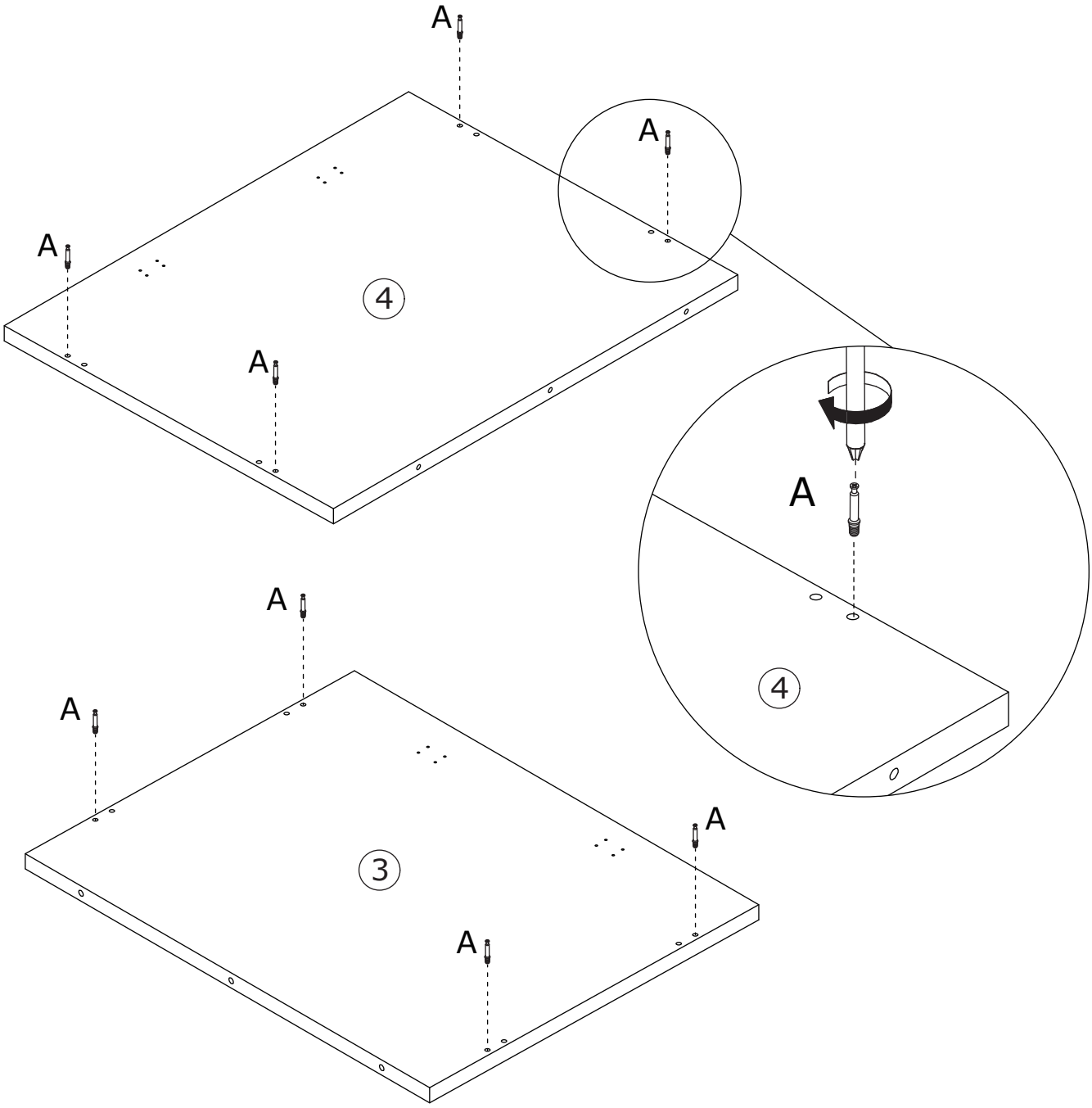

6

B x 8	C x 8	
		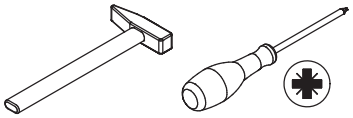
CRB1595A	CRF0830A	

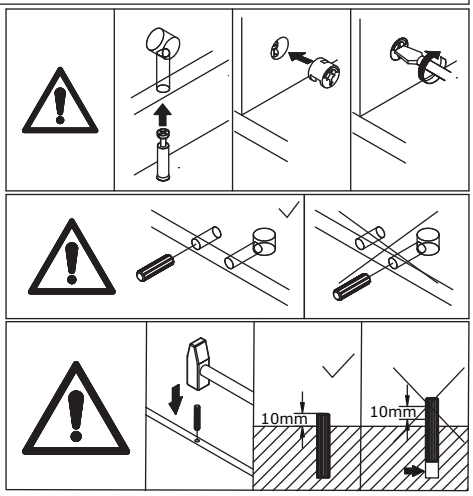

Insert wooden dowel(C) into plate 1 and 2 at first, attach plate 3 and 4 to plate 1 and 2.
Put cam lock(B) into holes in plate 1,2 and turn clockwise to tighten as shown.

Face up

B
C
4
C
B
B
C
B
2
B
1
C
B
B
C
C
B
3
C
4
1
B
180°

The holes are facing up

7

A x 4

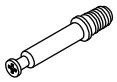

CRA0635A

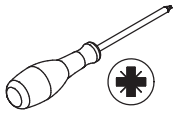

Insert quickfit screw(A) into plate 9 with a screwdriver as shown.

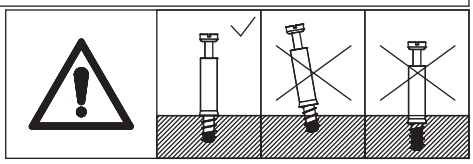

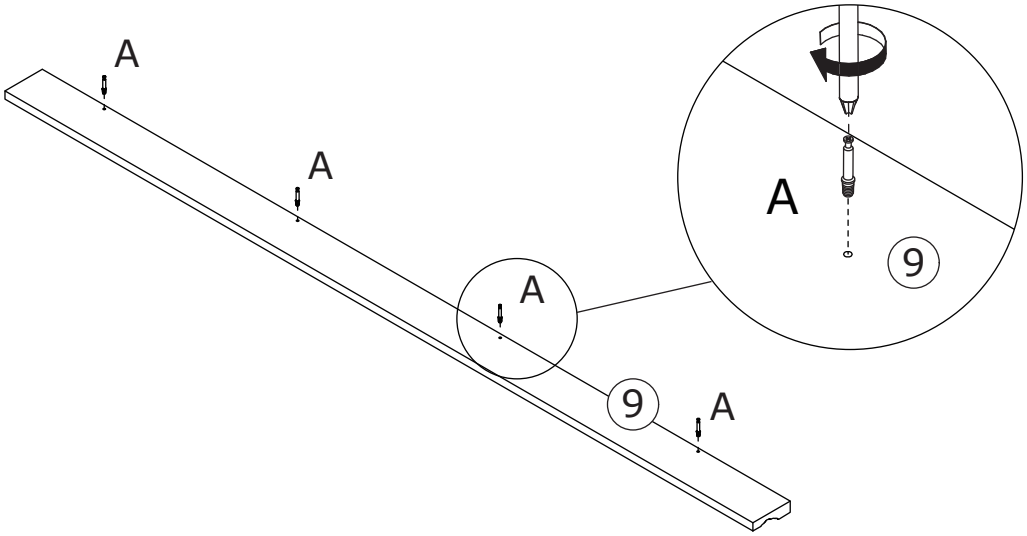

8

B x 4

CRB1595A

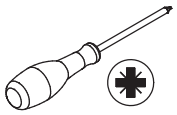

Attach plate 9 to plate 1, put cam lock(B) into holes in plate 1 and turn clockwise to tighten as shown.

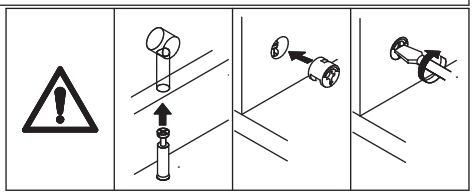

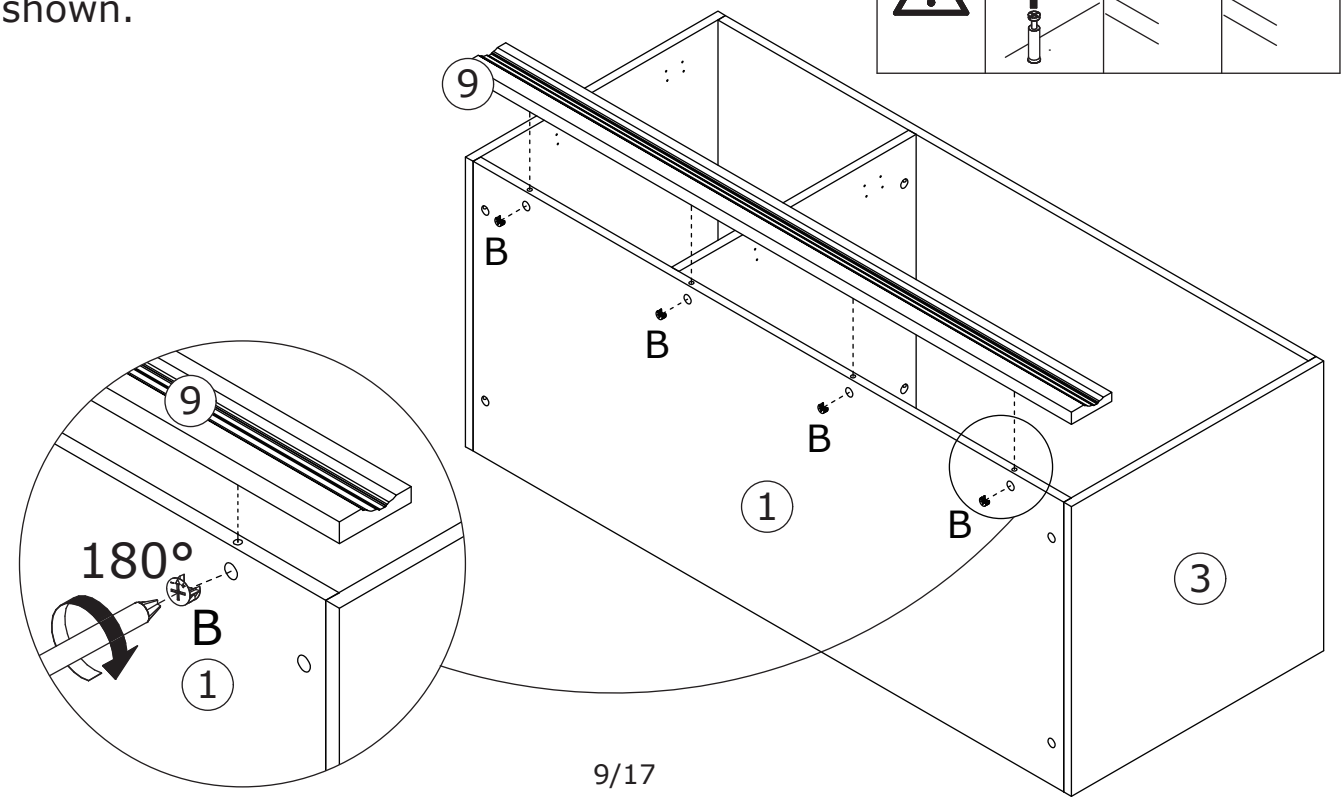

9

D x 16

CRE0314A

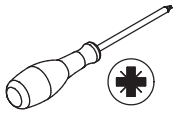

D

CRE0314A

H

CRD3514A

Fix back plate 6 with screw(D) as shown.

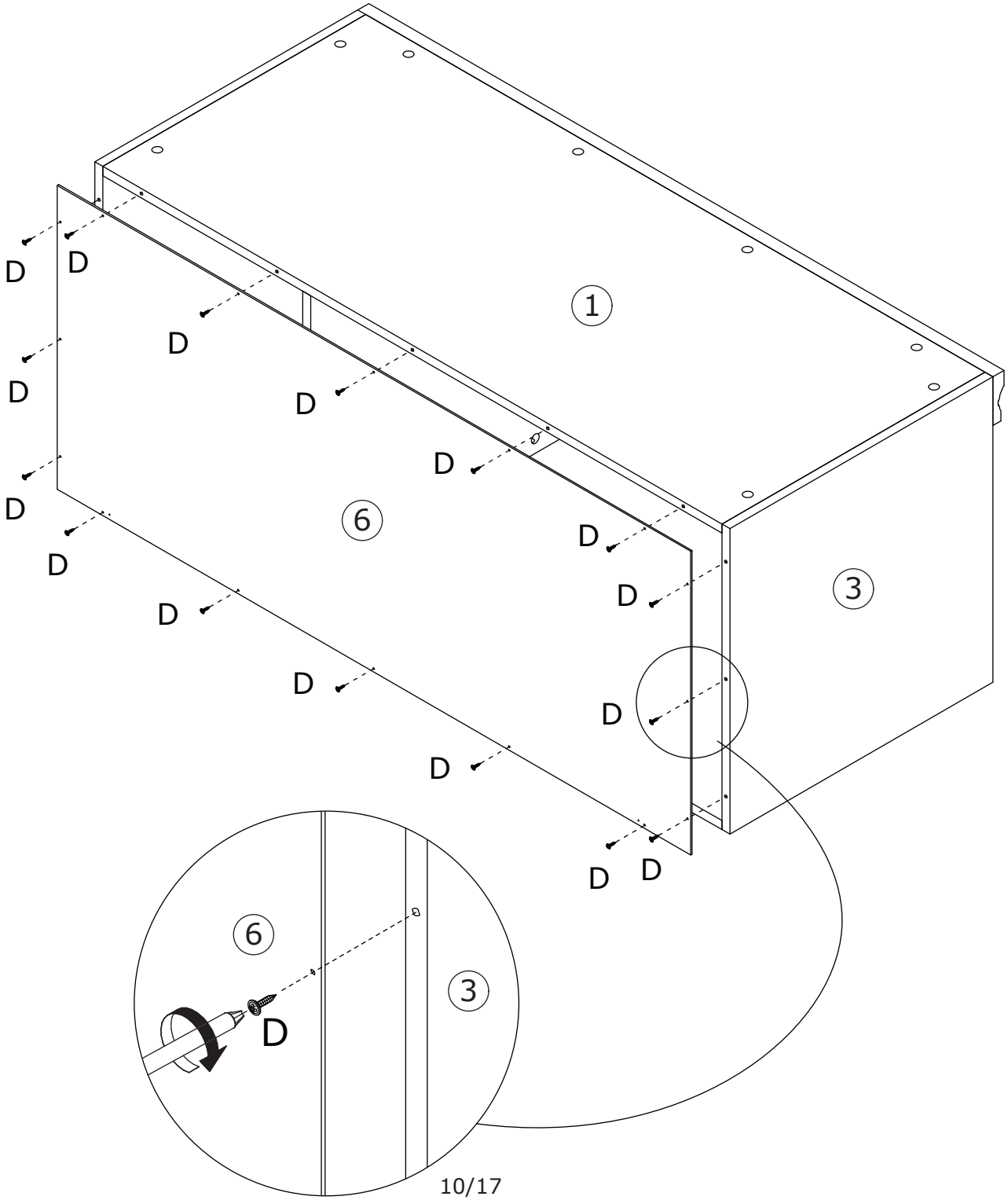

10

Pay attention to the difference between the middle parts of the two types of door hinges.

- The curved door hinges(F) are used on the outermost door plates
- And the full coverage door hinges(G) are used on the door panel in the middle of the cabinet.

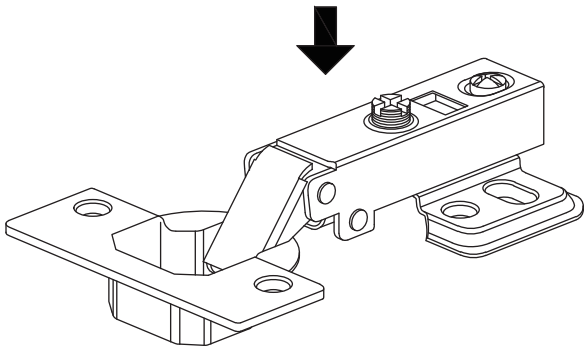

F

Full overlay hinge

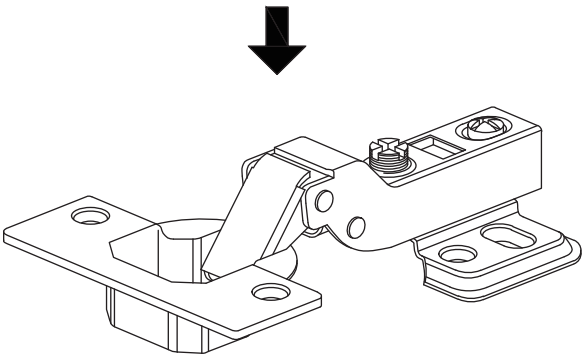

G

Half overlay hinge

11

F x 4	H x 8	
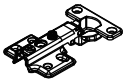 DGA861A	CRD3514A	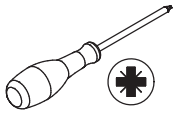

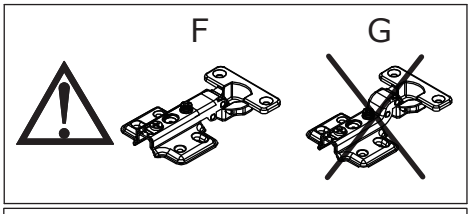

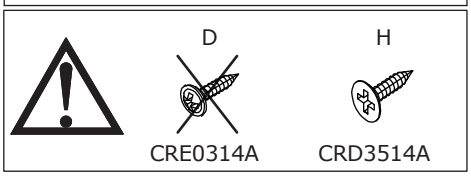

Fix hinge(F) to plate 7 and 8 respectively with screw(H) as shown.
Please note, hinge(F) is used in this step.

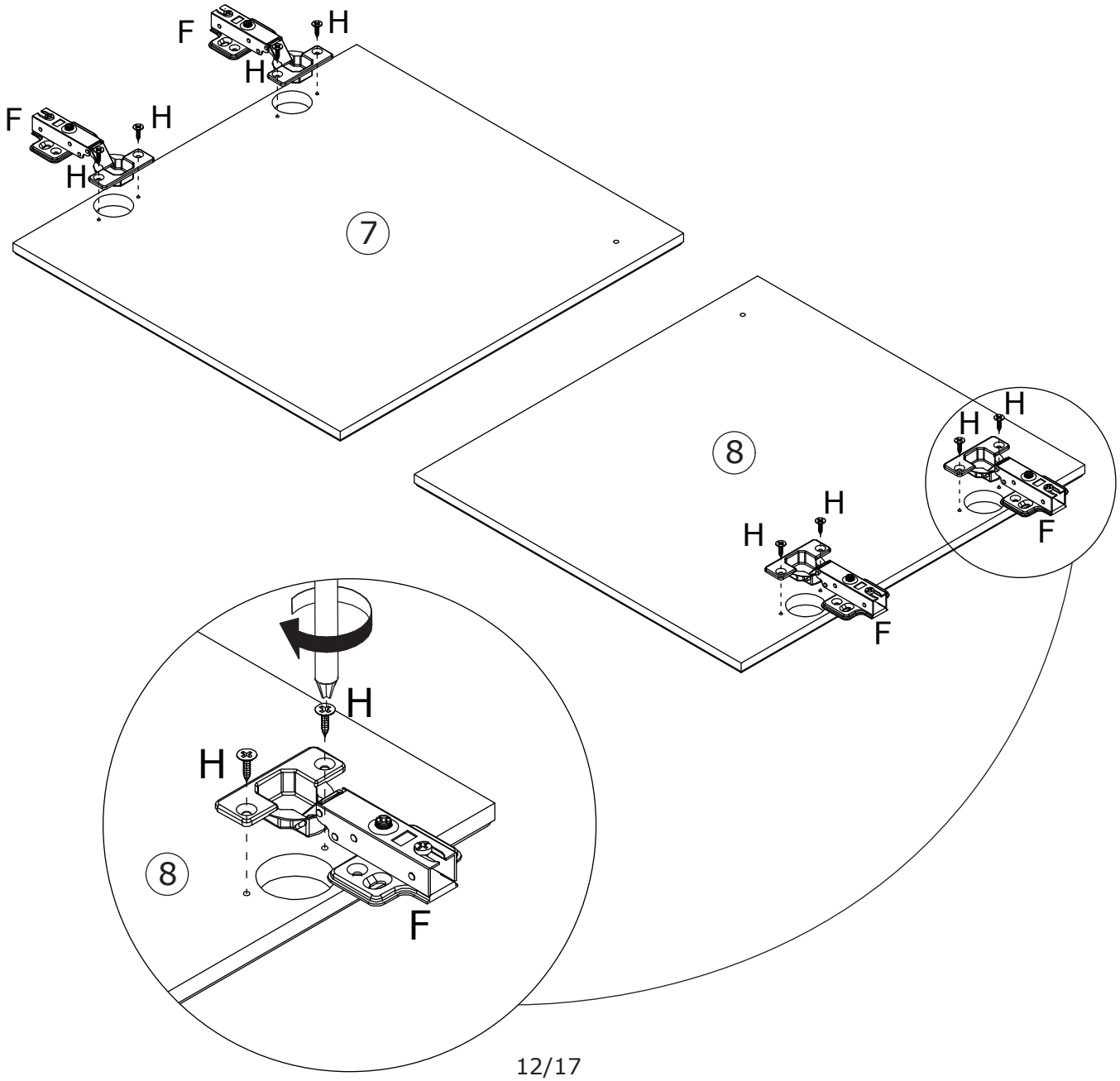

12

H x 16	J x 2	K x 2	
CRD3514A	∅20 x 23 mm	CRE0420A	

Attach plate 7 to plate 3; plate 8 to plate 4 by fixing hinge with screw(H) as shown.
Fix knob(J) to door plates with screw(K) as shown.

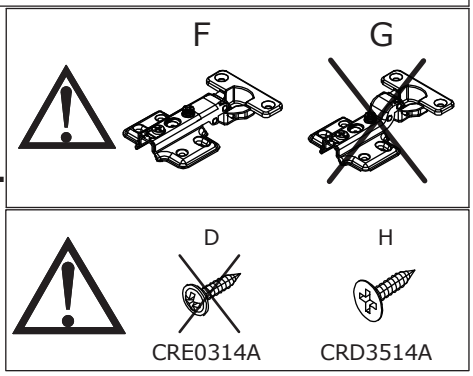

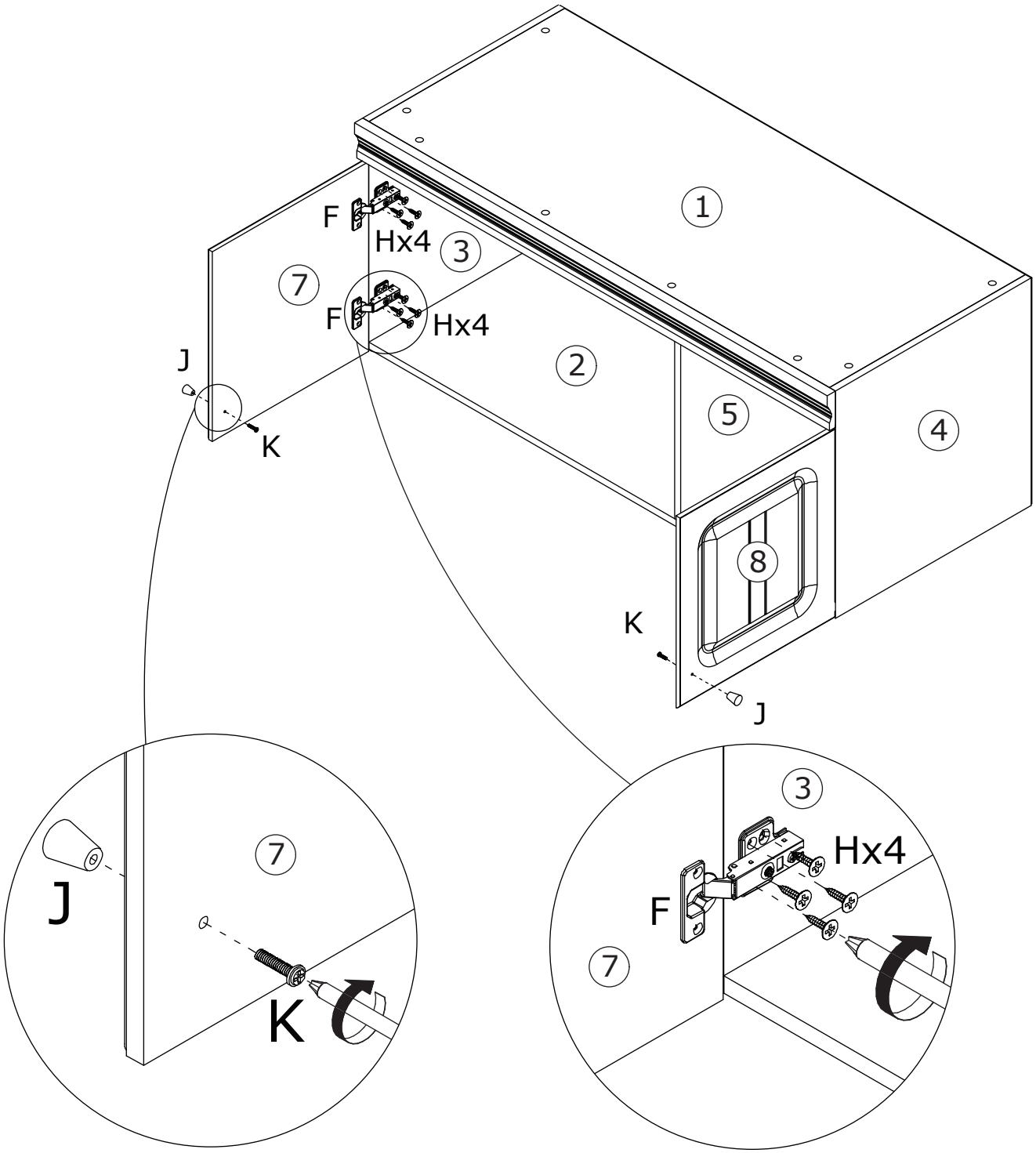

13

G x 2	H x 4	
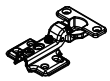 DGA861B	CRD3514A	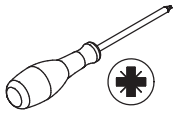

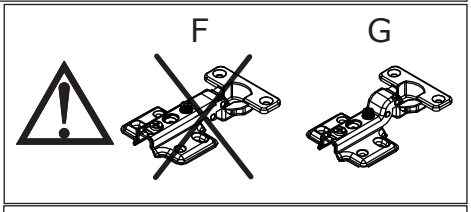

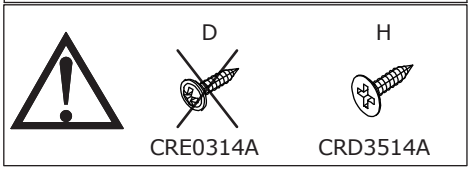

Fix hinge(G) to another plate 8 with screw(H) as shown.

Please note, hinge(G) is used in this step.

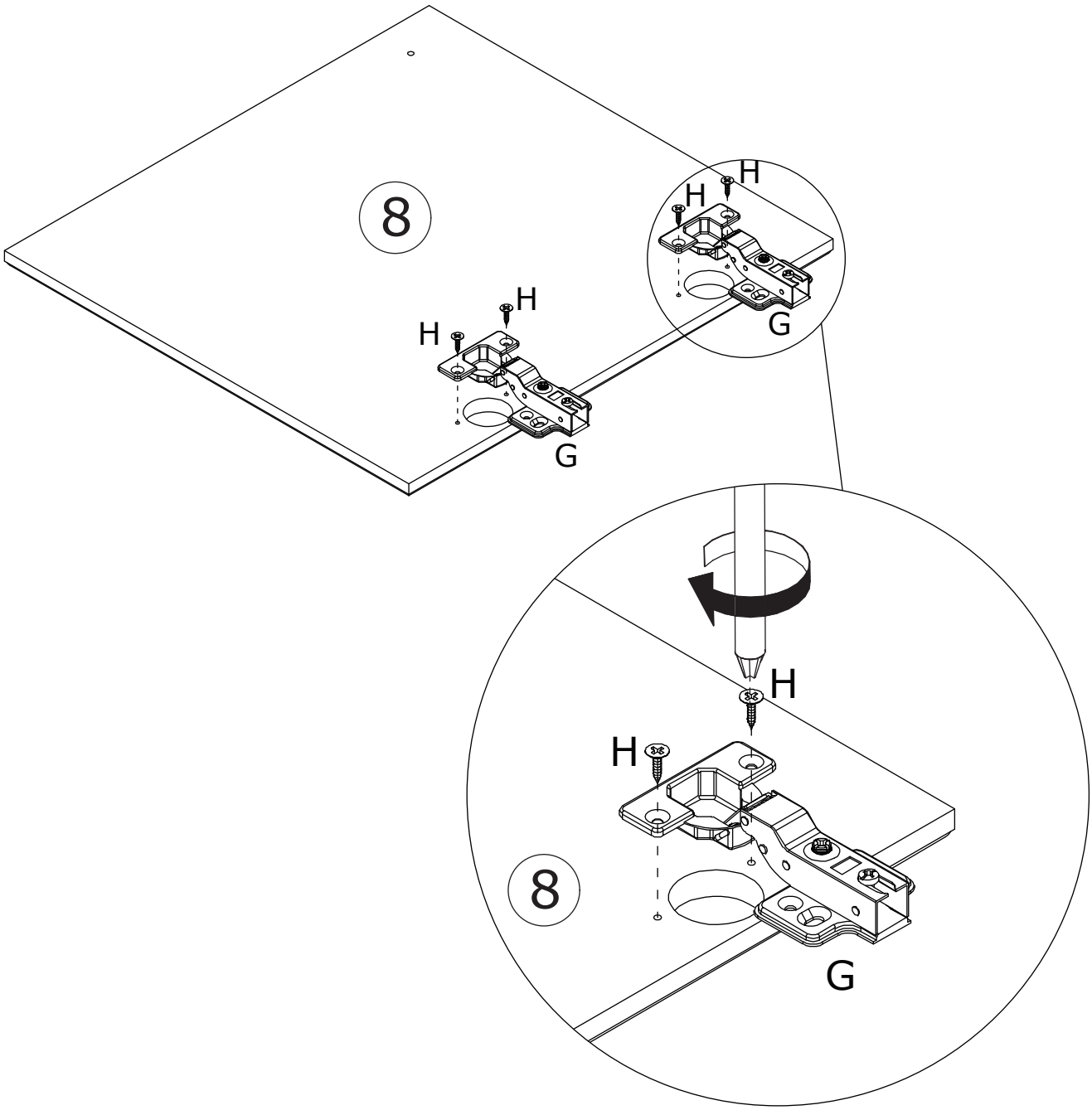

14

H x 8	J x 1	K x 1	
CRD3514A	∅20 x 23 mm	CRE0420A	

Attach plate 8 to plate 5 by fixing hinge with screw(H) as shown.
Fix knob(J) to door plate with screw(K) as shown.

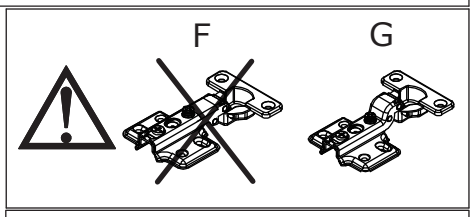

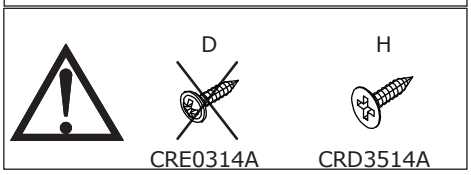

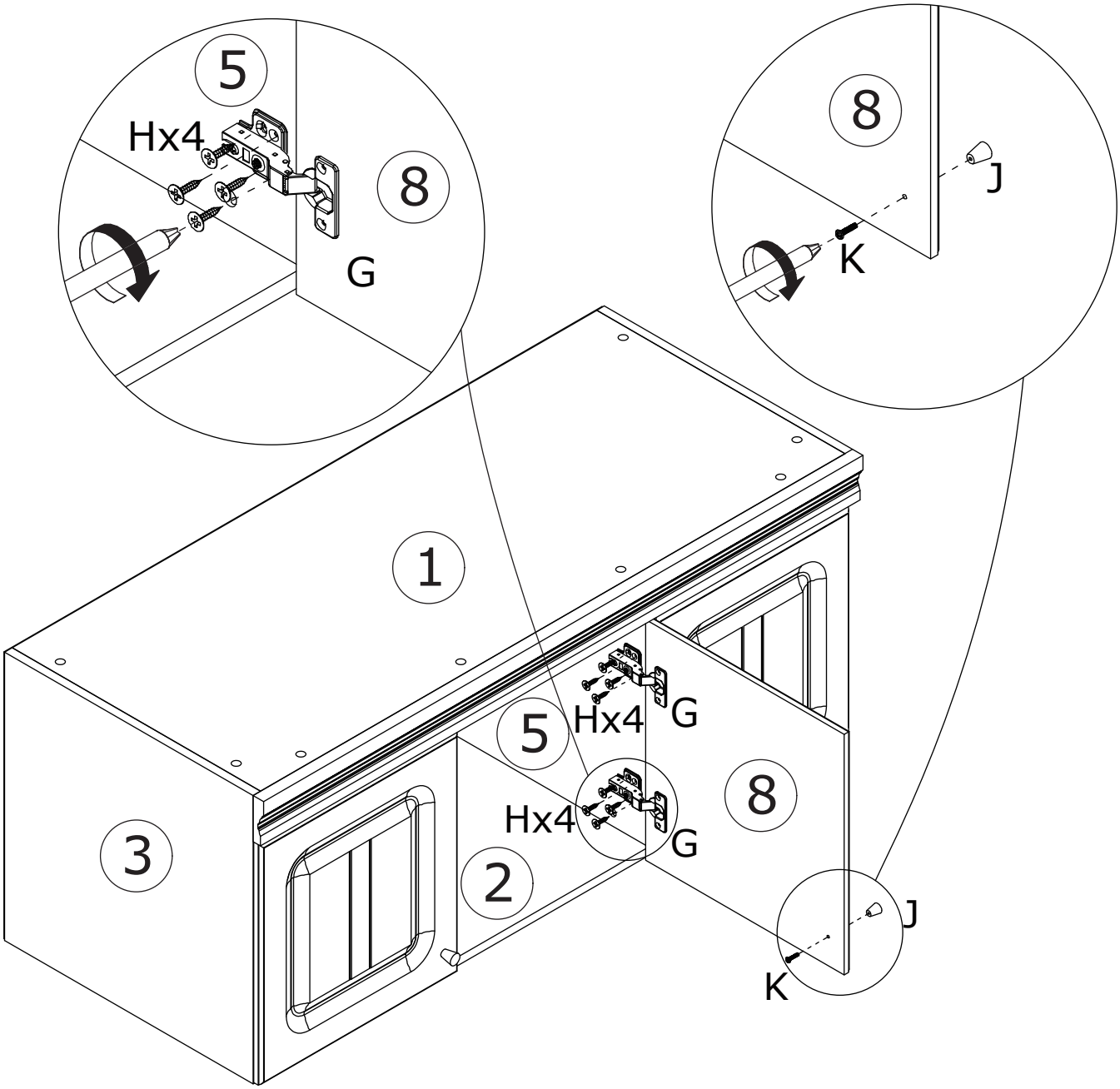

15

E x 2	H x 4	
28 x 14 mm	CRD3514A	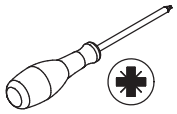

Connect the cabinet with wardrobe using part(E) with screw(H) as shown.

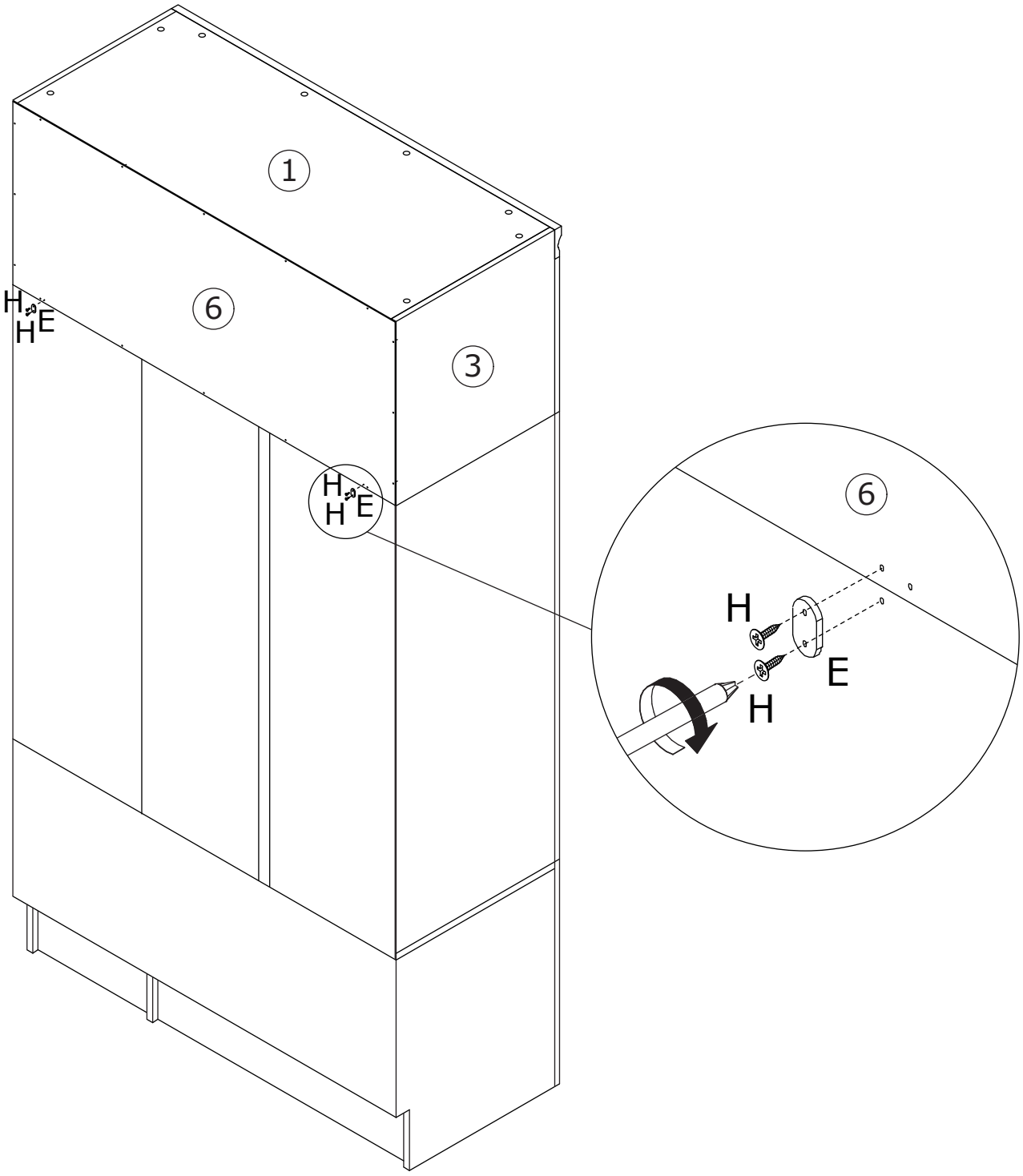

16

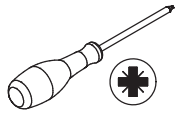

If doors are still not aligned if the hinges are properly correctly, please watch the video.

https://youtu.be/n0Lb36SoODM

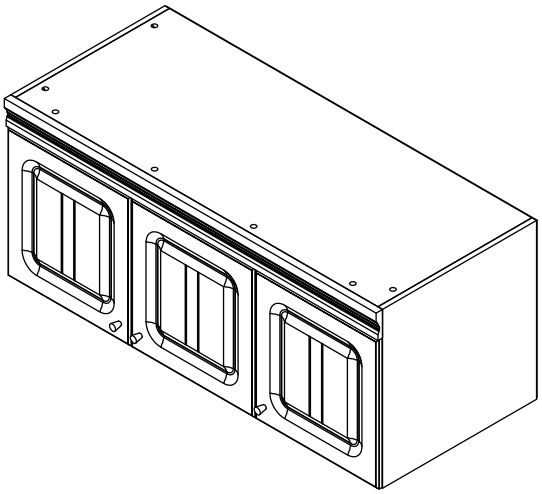

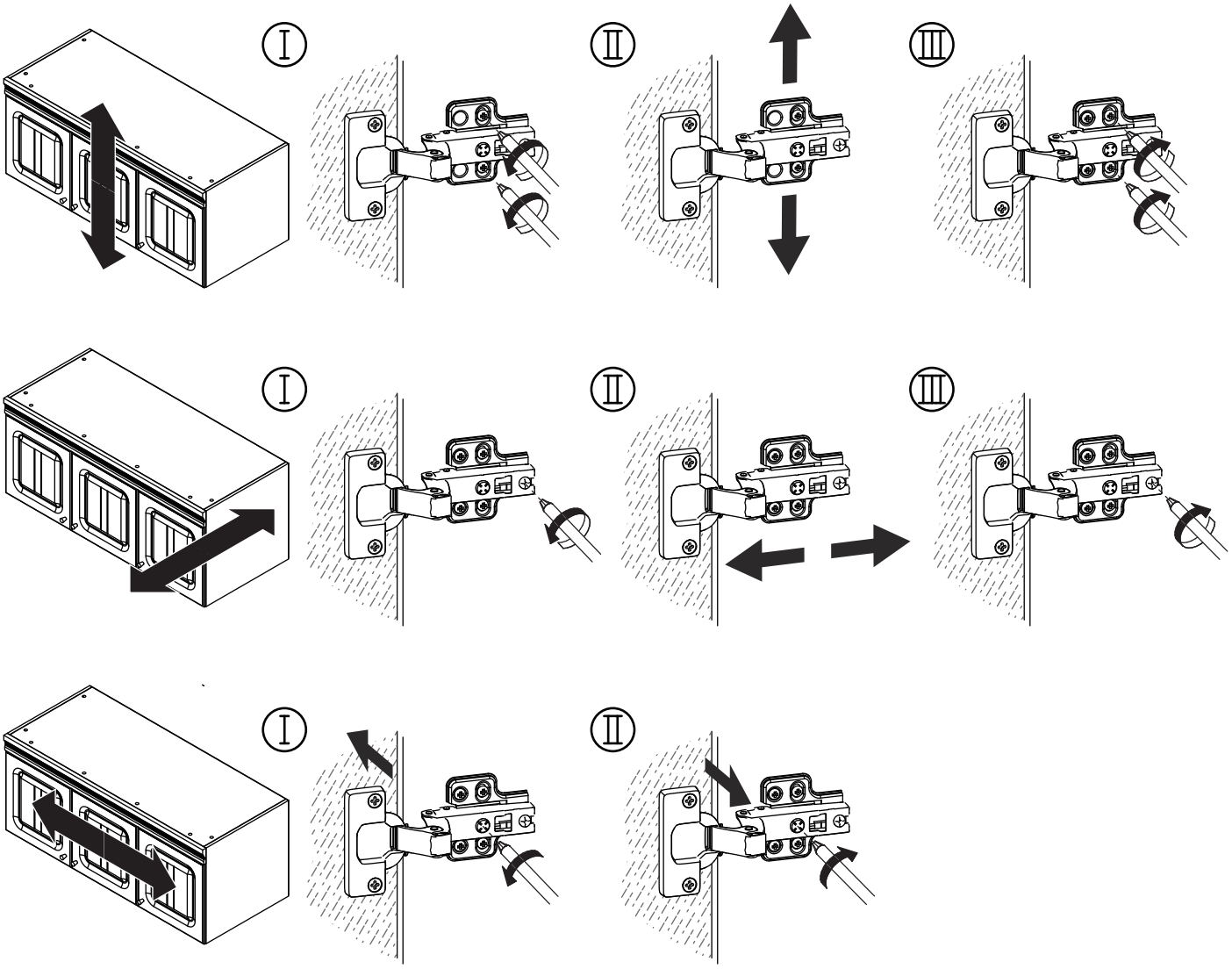

WARRANTY

WARRANTY CLAIMS

•There is a 30-day warranty for broken furniture or any other problems that do not work properly. The warranty will start from the date of purchase which must be verified by proof of purchase.

•Before making a claim, we may be able to answer your query, simply call us. Please leave your purchase order number, along with some details of the problem, if you want a replacement part. We will arrange within 48 hours. If there is out of stock, we will reply with a shipping date.

•The product must be used in accordance with the instructions provided. For health reasons.

•For other reasons, if the furniture needs to be returned, it must be cleaned and dried and operated within 30 days of receipt.

Type of Warranty Claim

•Failure to follow the furniture instructions will invalidate the warranty. Attention please.

•Does not include damage during installation, but includes damage during transportation.

Scope of responsibility

•Shall not bear any responsibility for misuse or user damage and / or loss of parts during the installation of furniture.

•After using, the damage and scratches of the furniture are not covered by the warranty.

The Warranty Relates to All Bought in The Us and Covers The Following Areas

•Sheet parts: 1 month from the date of purchase.

•Electrical parts: 1 month from the date of purchase.

RETURNS

CHANGED YOUR MIND AND NEED TO RETURN YOU ITEM?

PLEASE FOLLOW THE BELOW INSTRUCTIONS:

- If you have purchased and have simply changed your mind, follow the retailer's instructions for returns.

DEFECTIVE ITEMS

- If your item is defective in any way, i.e. it doesn't work but you can't identify why, in the first instance, please call us.

DAMAGED ITEMS

- If you receive an order with obvious shipping damage from the retailer, then we suggest the delivery is refused. If the delivery has been accepted and then shipping damage is found, please follow the specific instructions advised by the retailer.
  In all circumstances please save all packaging material and paperwork for the order. Please be aware that if you dispose of packaging material or attempt to return the merchandise without contacting the fulfiller, you jeopardise your chances of making a claim, and you may not receive a credit for the return.

AFTER-SALES CONTACT

adelahu@fufugaga.com

208-820-0068