LED Bathroom Mirror

Instruction Manual

FM-BGY25YY



EST 9:00AM--17:00PM

HJ-Customer-Service@outlook.com

(909)637-7665 | (909)637-7593

1 Before Assembly

Thank you for your purchase. These instructions are designed to help you complete the installation. Since the product contains fragile glass, you need to protect yourself from cuts and keep it away from your children during installation.

Assembly Tips

- Check the list of contents before assembly to ensure that all parts are included in the package.
- Make sure the wall can bear the weight of the mirror.
- Do not use string or chain to hang the product.

Care Advice

- Before using, clean with warm water and a soft, lint-free cloth.
- Check all the screws and bolts are tight every three months or as needed.
- Clean with an ammonia-free glass cleaner or detergent.
- Avoid spraying cleaners directly onto the mirror.

Note: This product contains fragile glass. Do not knock or squeeze it.

DISCLAIMER: This product contains fragile glass components. Keep children away during installation. Mishandling may result in damage or personal injury. Before use, please note that our company shall not be held liable for any injuries or damages caused by improper use.

If you experience any issues with the product, please contact our after-sales service.

2 Package Contents

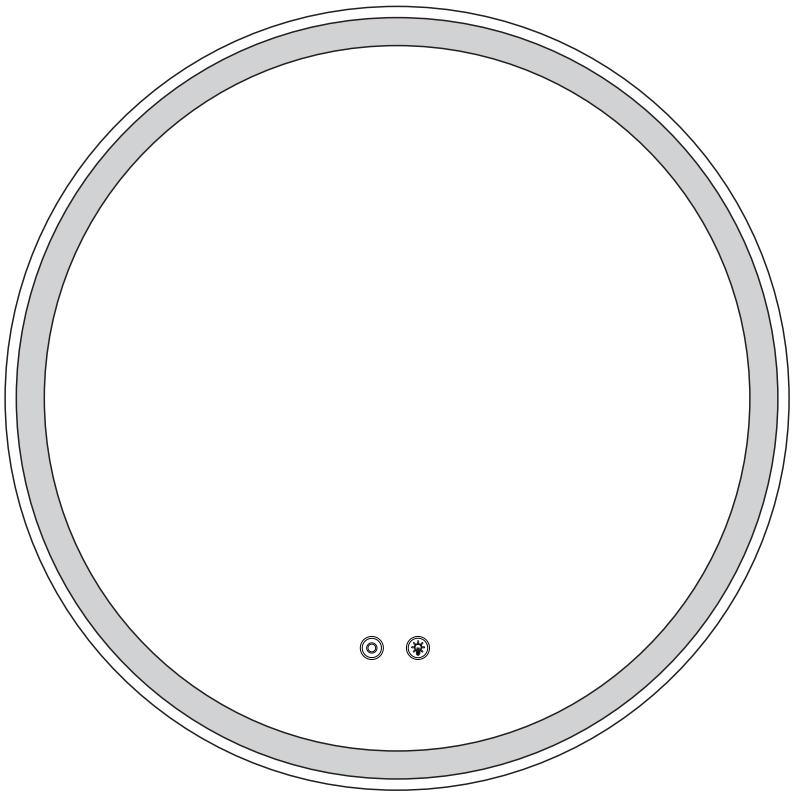

Mirror
x1

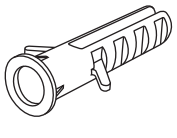	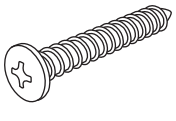
Wall Anchor **x2**	Screws **x2**

Tools Required (Not Provided)



3 Installation Guide

Choose one of the installation methods based on your preference.

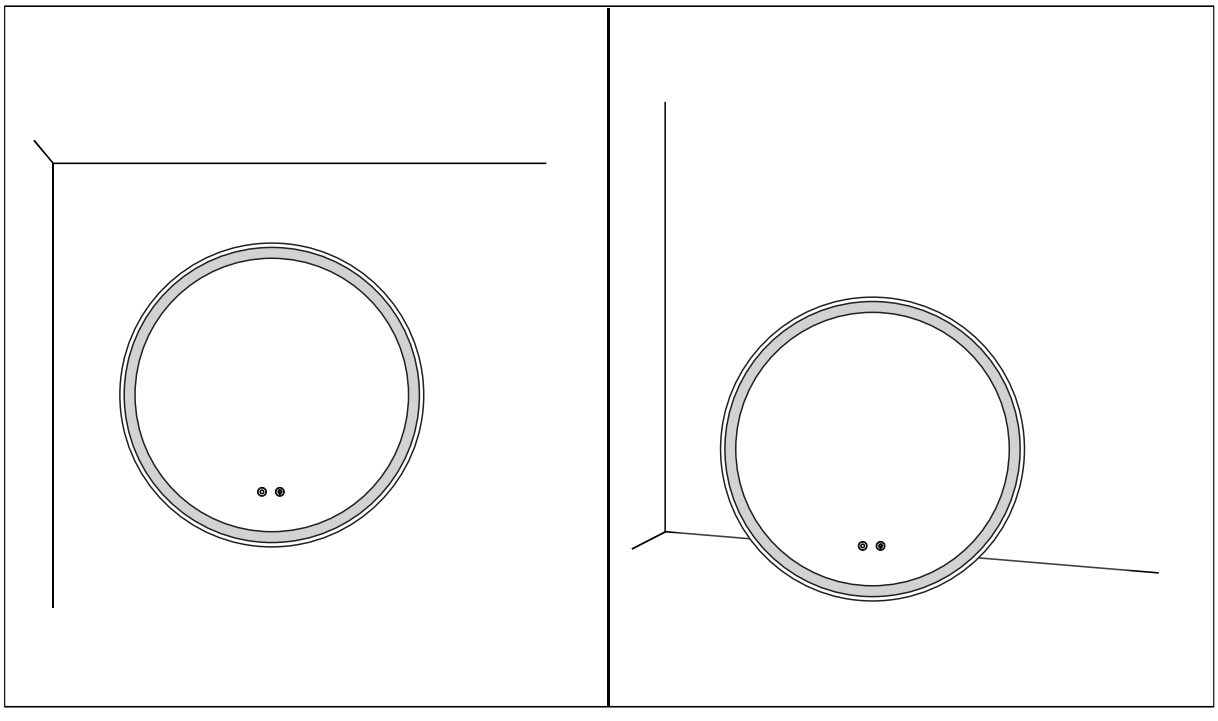

Wall-Mounted　　Leaning

NOTE: Ensure the mirror is securely against the wall and stable to prevent it from falling and breaking.

Wall-Mount Installation

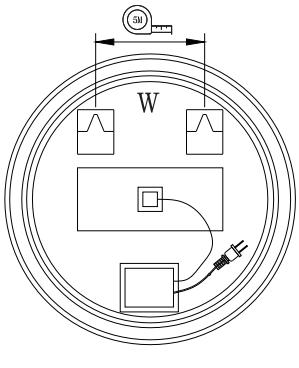

① Measure the distance between the two mounting points on the back of the mirror.

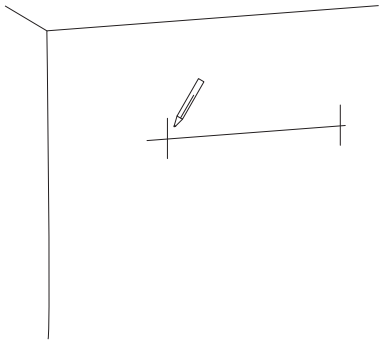

② Accurately mark the position of the mounting points on the wall, ensuring they are level.

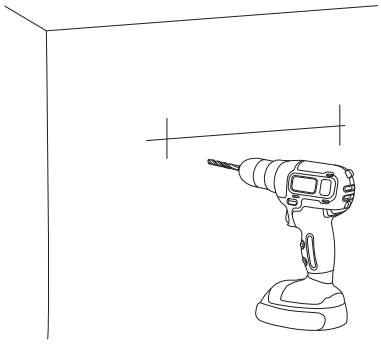

③ Drill holes at the marked positions. The depth should be slightly greater than the length of the wall anchor.

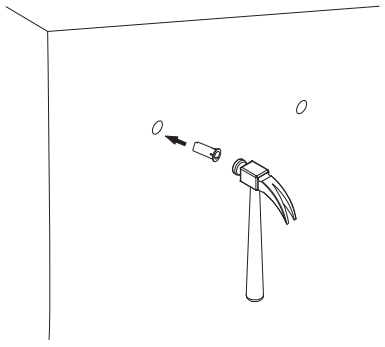

④ Insert the wall anchors into the drilled holes, ensuring they are flush with or slightly recessed into the wall.

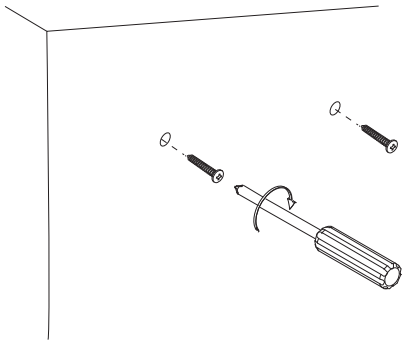

⑤ Fasten the screws into the wall anchors, leaving enough length exposed to hang the mirror.

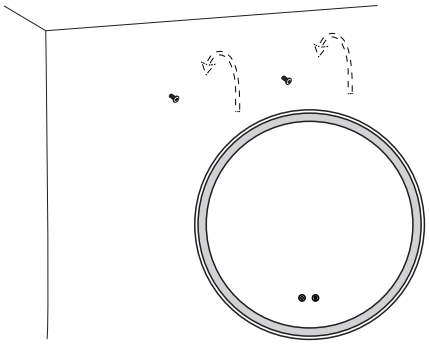

⑥ Hang the mirror securely on the installed screws.

4 Button Functions

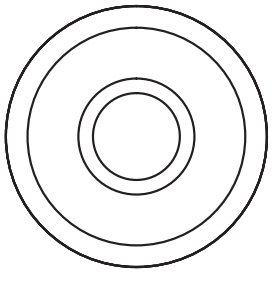

Power/Defogging Button

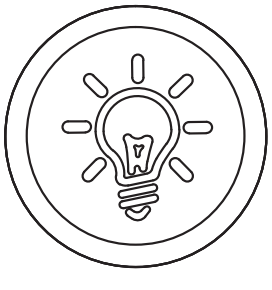

Lighting Button

Power/Defogging Button: Press to turn on/off. Long press to activate the defogging function (blue light on).

Lighting Button: Press to switch lighting modes. The lighting sequence is: cold ➡ warm ➡ mixed (warm and cold). Long press to adjust brightness (indicator flashes twice when reaching the limit).

Note: This product contains fragile glass. Do not knock or squeeze it.

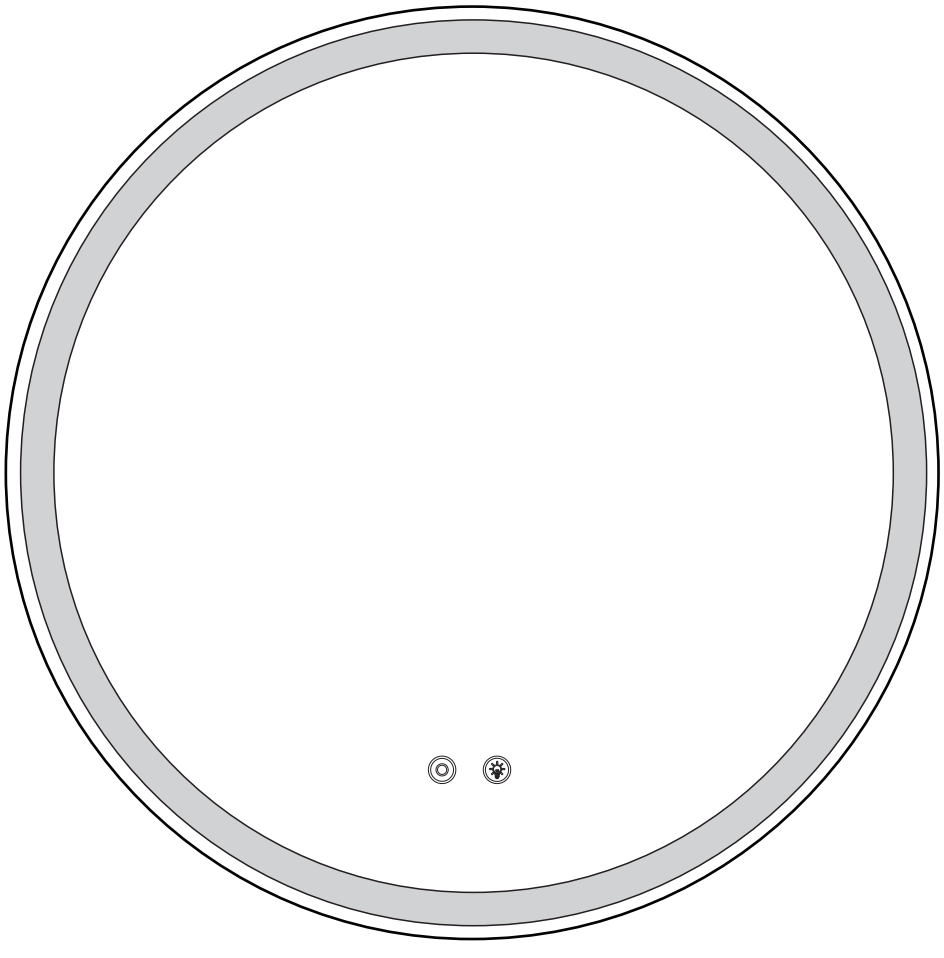

Technical Support

(909)637-7665 | (909)637-7593

Other Info

HJ-Customer-Service@outlook.com

Thank you for choosing this product. We strive to provide you with the best quality products and service in the industry. Should you have any issues, please don't hesitate to contact us.