INSTALLATION & USER MANUAL

CEILING FAN WITHOUT LIGHT

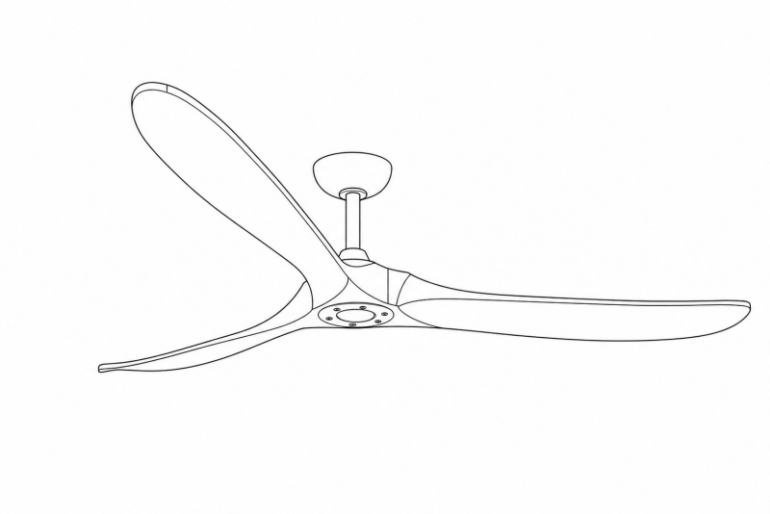

Item#46003-BK

Customer Service:support@ceilingfanhelp.com

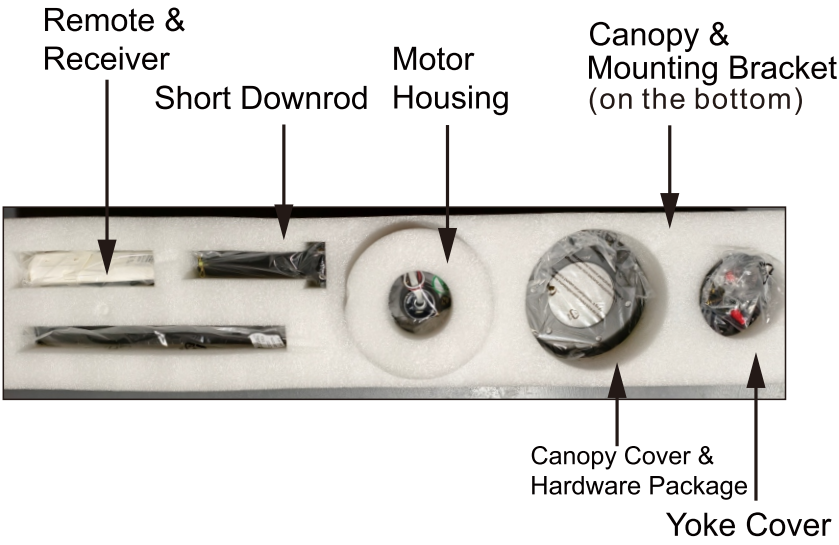
Remote &
Receiver
Short Downrod
Motor
Housing
Canopy &
Mounting Bracket
(on the bottom)
Canopy Cover &
Hardware Package
Yoke Cover


Blade
Installation Manual

Table of Contents

Table of Contents.....2
Safety Information.....2
Dimension Reference.....3
Hardware Included.....3
Fan Parts Included.....3
Exploded View.....4
Installation Instructions.....5-13
Troubleshooting Guide.....14

Safety Information

READ AND SAVE THESE INSTRUCTIONS.

1. To reduce the risk of electric shock, ensure the power is turned off at the circuit breaker or fuse box before installation.

2. All wiring must be in accordance with the National Electrical Code “ANSI/NFPA 70” and local electrical codes. Electrical installation should be performed by a qualified licensed electrician.

3. Make sure the outlet box and support structure are securely mounted and rated to safely support a fan weighing up to 35 lbs (15.9 kg); this fan must be installed on a UL-listed outlet box clearly marked “Acceptable for Fan Support of 35 lbs (15.9 kg) or less.” If you are unsure about safety or compatibility, please consult a qualified electrician.

4. Do not place objects in the path of the blades.

5. To clean the fixture,turn off the power, wait for it to cool, and wipe the fixture with a clean, soft cloth.

6. After making electrical connections, spliced conductors should be turned upward and carefully pushed into the outlet box. The wires should be spread apart with the grounded conductor and the equipment-grounding conductor on one side of the outlet box and ungrounded conductor on the other side of the outlet box.

7. All set screws must be checked and retightened where necessary before installation.

WARNING: To reduce the risk of electrical shock or fire, do not use this fan with any solid-state fan speed control device. Such use will permanently damage its electronic circuitry.

WARNING: To reduce the risk of personal injury, do not bend the blade brackets during installation, blade balancing, or fan cleaning.

WARNING: To reduce the risk of fire, electric shock or personal injury, mount to outlet box marked “acceptable for fan support of 35 lbs. (15.9 Kg) or less” and use screws provided with the outlet box.

WARNING: To avoid possible electrical shock, turn the electricity off at the main fuse box before wiring.

WARNING: To reduce the risk of electrical shock, this fan should not be installed with an isolating wall control or switch, as it may cause incompatibility issues.

CAUTION: To reduce the risk of personal injury, use only the screws provided with the outlet box.

CAUTION: Please use carefully when working around or cleaning the fan to avoid injury or damage to the fan.

CAUTION: The fan must be mounted with a minimum of 7 ft (2.1 m) clearance from the trailing edge of the blades to the floor.

CAUTION: Changes or modifications not expressly approved by the party responsible for compliance could void the user’s authority to operate the equipment.

Dimension Reference

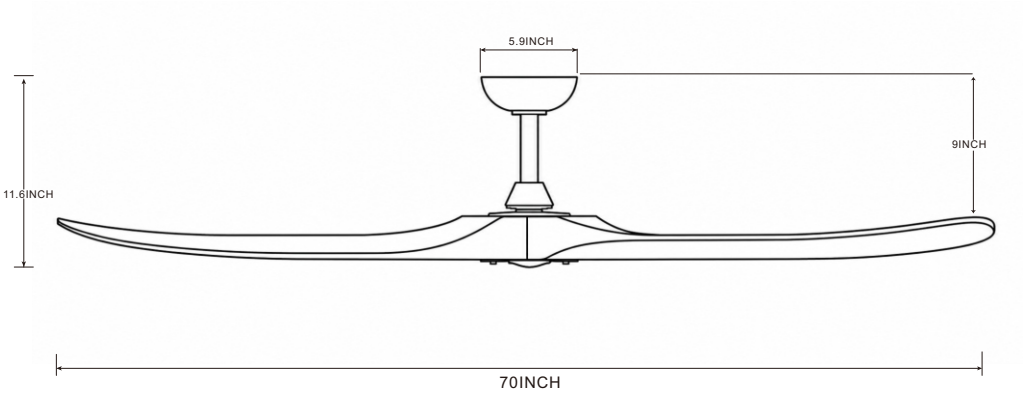

Hardware Included

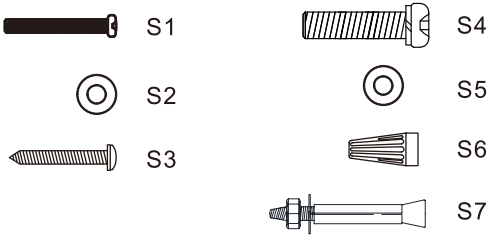

Hardware Package	Quantity
S1.Machine Screw	2
S2.Washer	4
S3.Wood Screw	4
S4.Blade Screw	7
S5.Washher	7
S6.Wire Nut	3
S7.Explosion Screw	2

Fan Parts Included

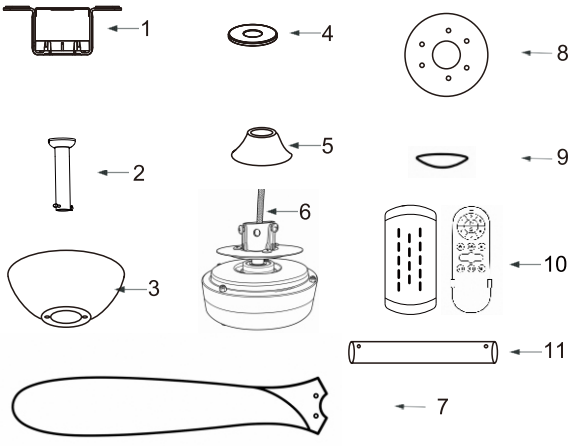

Item Name	Quantity
1. Mounting Bracket	1
2. Downrod	1
3. Canopy	1
4. Canopy Cover	1
5. Yoke Cover	1
6. Motor Assembly	1
7. Blade	3
8. Reinforcing disc	1
9. Motor housing cover	1
10.Remote Control (Batteries not included)	1
11. Backup Downrod	1

Exploded View

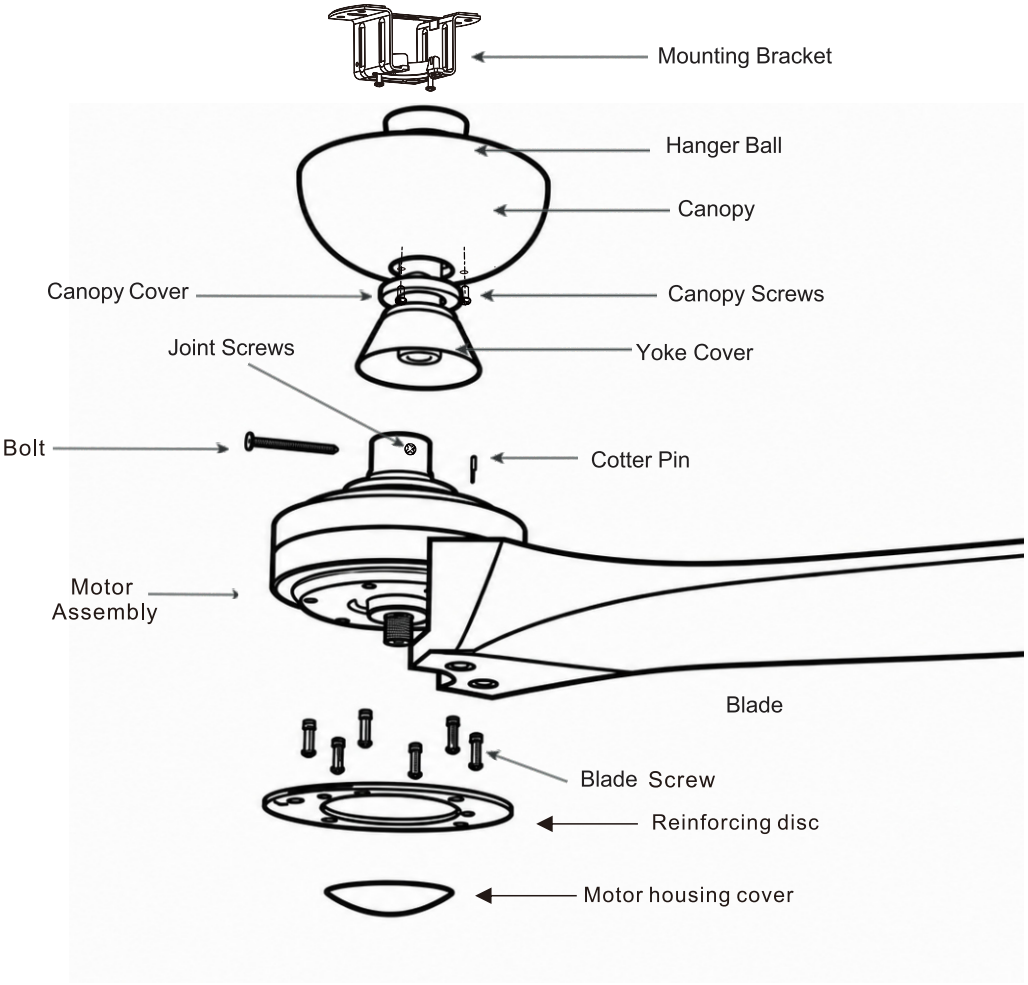

Installation Instructions

Step1 MOUNTING

- Remove the fan motor housing.
- Remove the cotter pin and bolt from the downrod.
- Loosen the jam screw in the yoke until it is flush with the inside surface of the yoke.
- Remove the downrod, canopy, and yoke cover.
- Place the downrod inside the canopy and yoke cover.
- Route the wires exiting from the motor through the yoke cover, canopy, and downrod.
- Insert the bolt through the hole in the shaft and downrod. Be careful not to damage or cut the fan wires.
- Tighten the bolt. Secure it with the cotter pin through the hole at the end of the bolt.
- Secure the downrod in position by tightening the jam screws.
- Slide the yoke cover down, and it will be flush with the motor housing.

CAUTION: To ensure stability and prevent damage, fully tighten the downrod and set screws.

Fig.1a

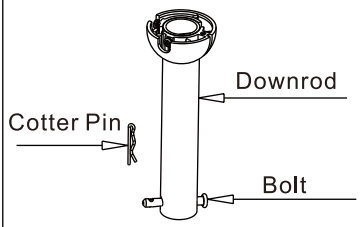

Fig.1b

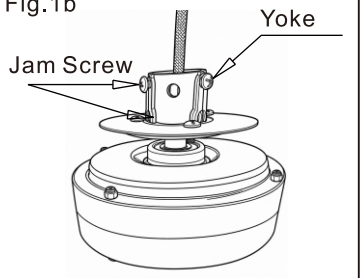

Fig.1c

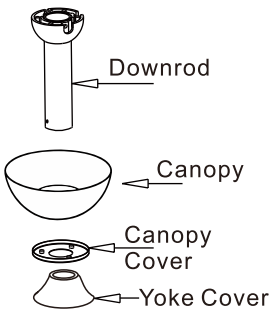

Fig.1d

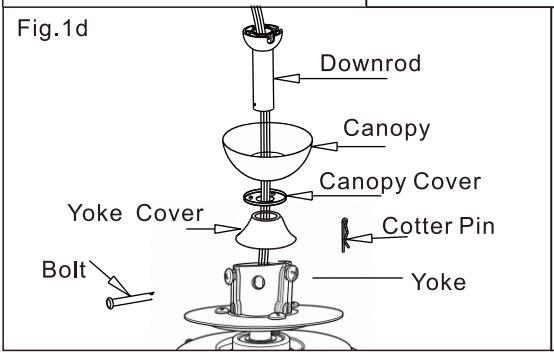

Fig.1e

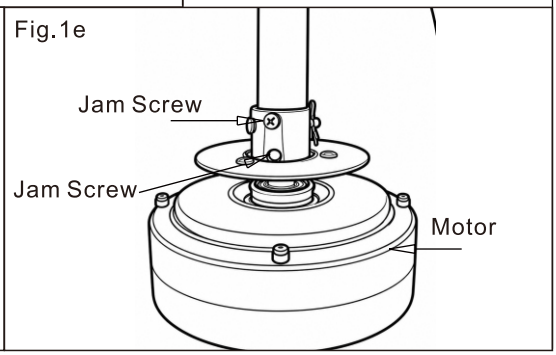

WARNING: Do not loosen the lower jam screws under any circumstances.

Step2 MOUNTING BLADES TO MOTOR

Install three blades on the motor assembly. (Fig2a)

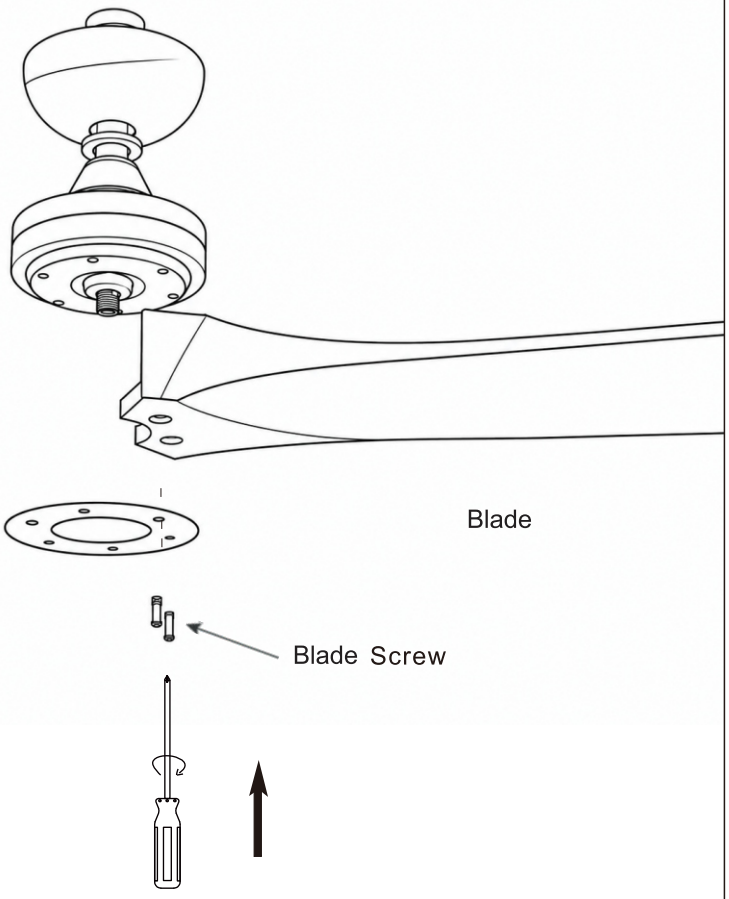

Fig.2a

Step2.1 Installation Motor housing cover

Installation Motor housing cover on to the motor assembly.(Fig.2a.1)

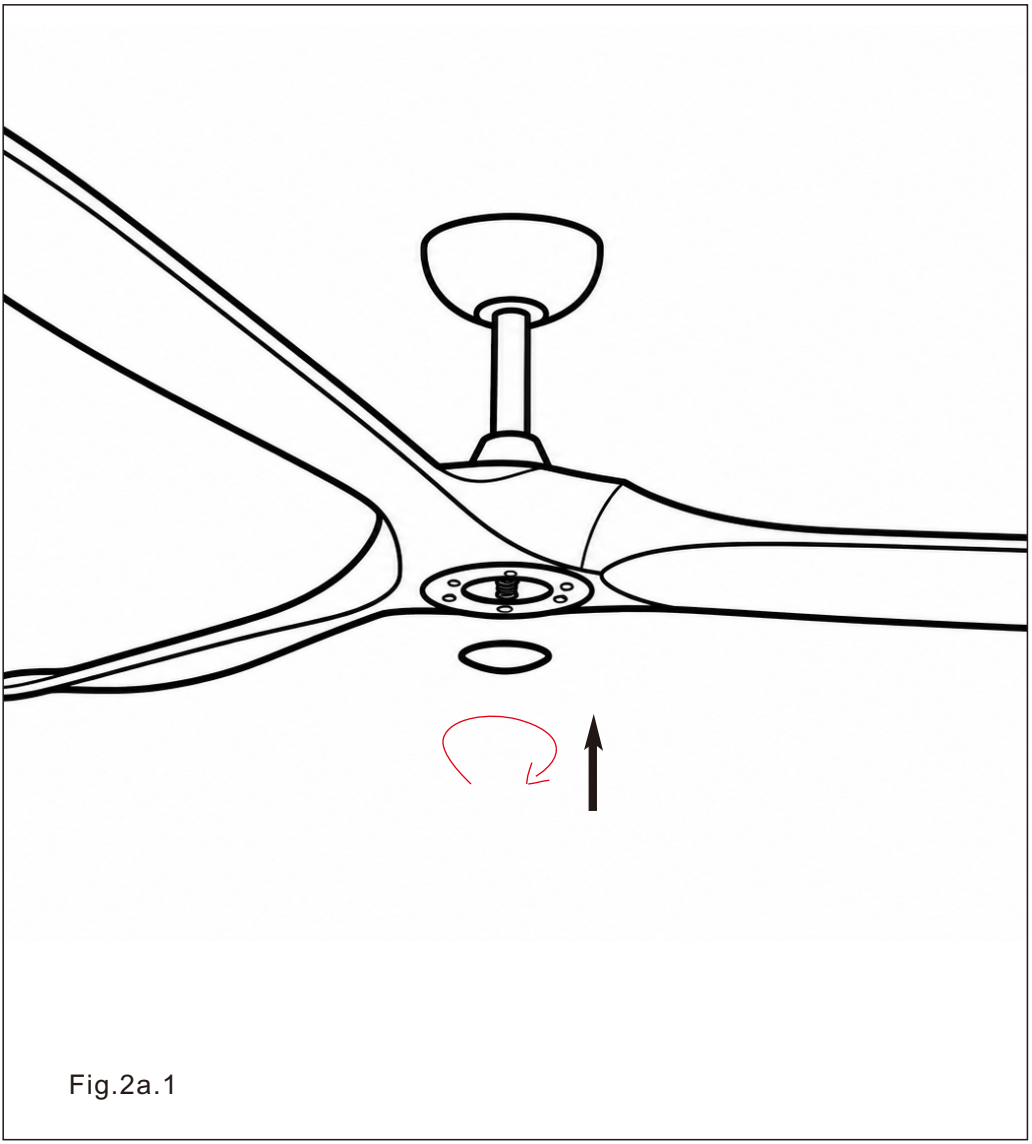

Fig.2a.1

Step3 INSTALL MOUNTING BRACKET

WARNING: To reduce the risk of fire, electric shock, or personal injury, mount to a UL/CSA listed outlet box marked acceptable for fan support and use mounting screws provided with the outlet box.

- Secure hanger to metal outlet box.
- The ceiling fan is hung on the hanger, with the hanger ball groove aligned with the hanger boss.

Fig.3a

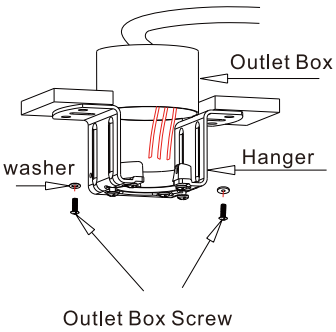

Fig.3b

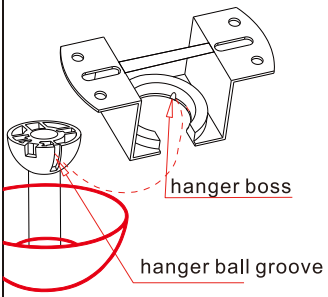

Fig.3c

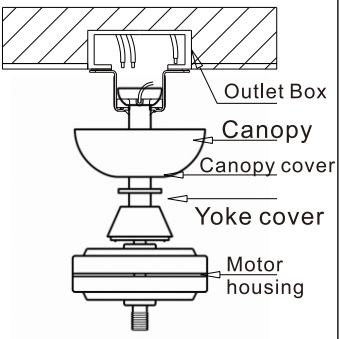

Wiring Diagram Of Receiver

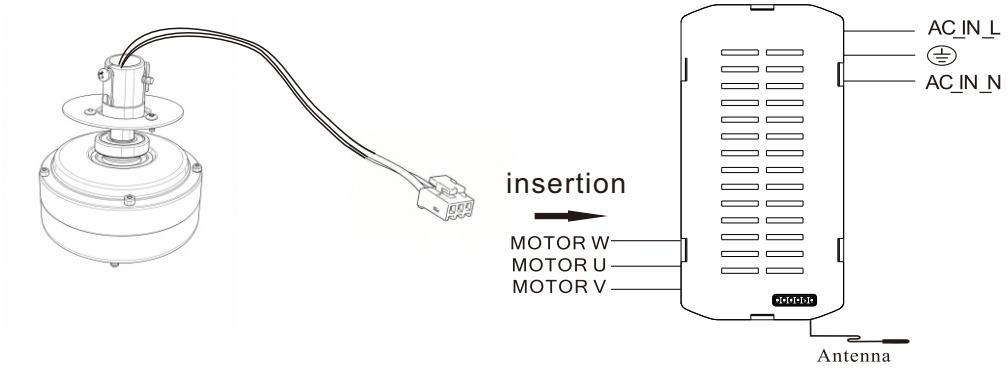

NOTE: Once the ground wires are connected, carefully tuck all wires and wire nuts into the metal box. Ensure that the wires are clear of the hemisphere and downrod when positioned in the mounting bracket.

B.Push all connected wires into the ceiling box

- Put the receiver into the mounting bracket as shown in figure 3b.
- When installing the canopy, ensure the antenna is not pressed against the canopy.
- Ensure to connect all earth wires accordingly.

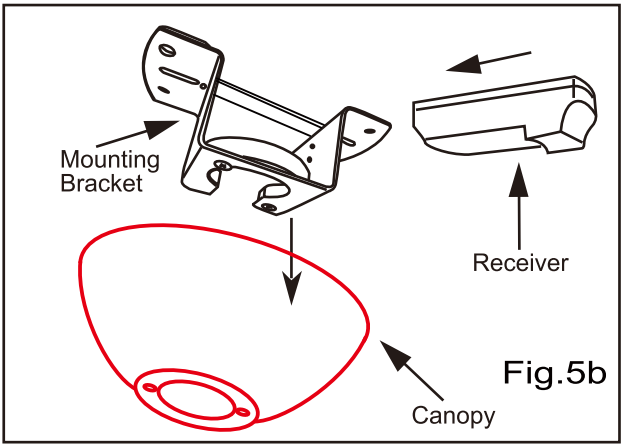

OPERATING INSTRUCTIONS FOR THE EMITTER

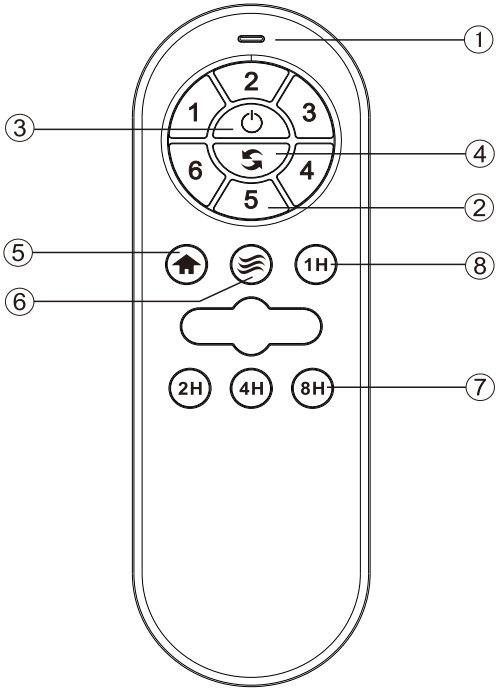

① Switch Indicator
② Speed Control
③ Fan Shutdown
④ Fan Reverse
⑤ Anti theft function
⑥ Natural wind
⑦ Timer

Actual use shall be subject to the real product

Learning method of remote control:

Power on the receiver,press the ⏻ key at the emitter at once. The learning is succeed ,when hear beep ringing from the loudspeaker.

- RF wireless digital transmission technology is adopted to realize the one-to-one control providing a rate of coincident code less than 1000000. Same code number is attached to the back of the emitter and the receiver. it is required to return a pair of the same code number of emitter /receiver to the manufacturer for repair service in case of any damage.
- In a sufficient space, you can use the receiver at any angle , no worry about the direction.

Notices

1 When the emitter is unable to remotely control the receiver, please check whether the switch batteries are in good contact, whether they are fixed properly and whether they run out of use.

2 When the emitter is unable to remotely control the receiver, please check whether there is other remote control products around the space and check whether the keys are pressed down, because same nature of remote control product may cause interference with each other resulting in poor receiving effect. Taking away such articles will normalize the remote control function. (the infrared remote controller is not included).

3. Please use this product under applicable voltage. Too low voltage will lead to failure of the remote controller to work (Please refer to the product label for the voltage range and related parameters).

4. Please take out the batteries if you will not use this product for a long time.

Step6 MOUNTING FAN ASSEMBLY

- Place two screws and washers on mounting plate which correspond with slots in canopy. Screw in two turns.

Step7 ENGAGE HEMISPHERE

- Carefully rotate fan assembly until groove in hemisphere locks over tab of canopy assembly.

- Loosen (do not remove) the two screws on mounting bracket. Slide the canopy up to mounting bracket and place the key hole on the canopy over the screw on the mounting bracket, turn canopy until it locks in place at the narrow section of the key holes.

- Align the holes on the canopy with mounting bracket and secure with the two screws until snug.

WARNING: Failure to seat tab in groove could cause damage to electrical wires and possible shock or fire hazard.

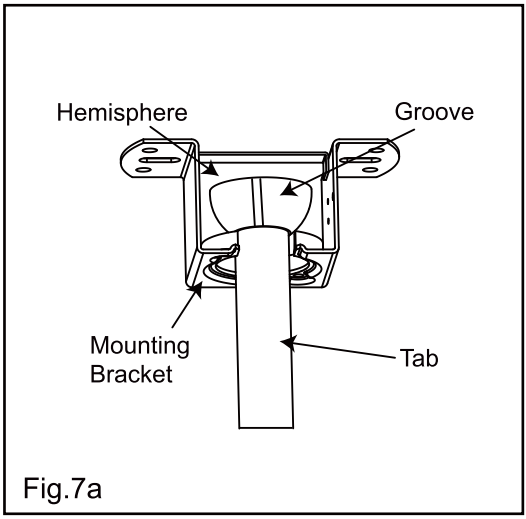

Fig.7a

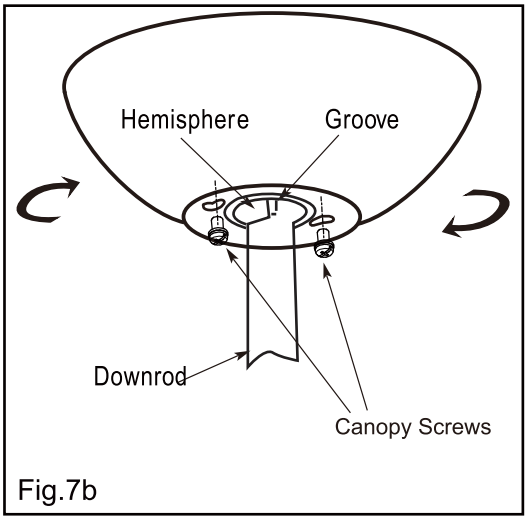

Fig.7b

NOTE: When installing fan on sloped ceiling, make sure tab on hanger bracket faces towards the top of the slope. Depending on the slope, a longer downrod may be required to prevent fan blades from hitting the ceiling.

Step 8 Install Canopy Cover

- Push the canopy cover up and align the holes with the two screws.
- Rotate clockwise until it engages.

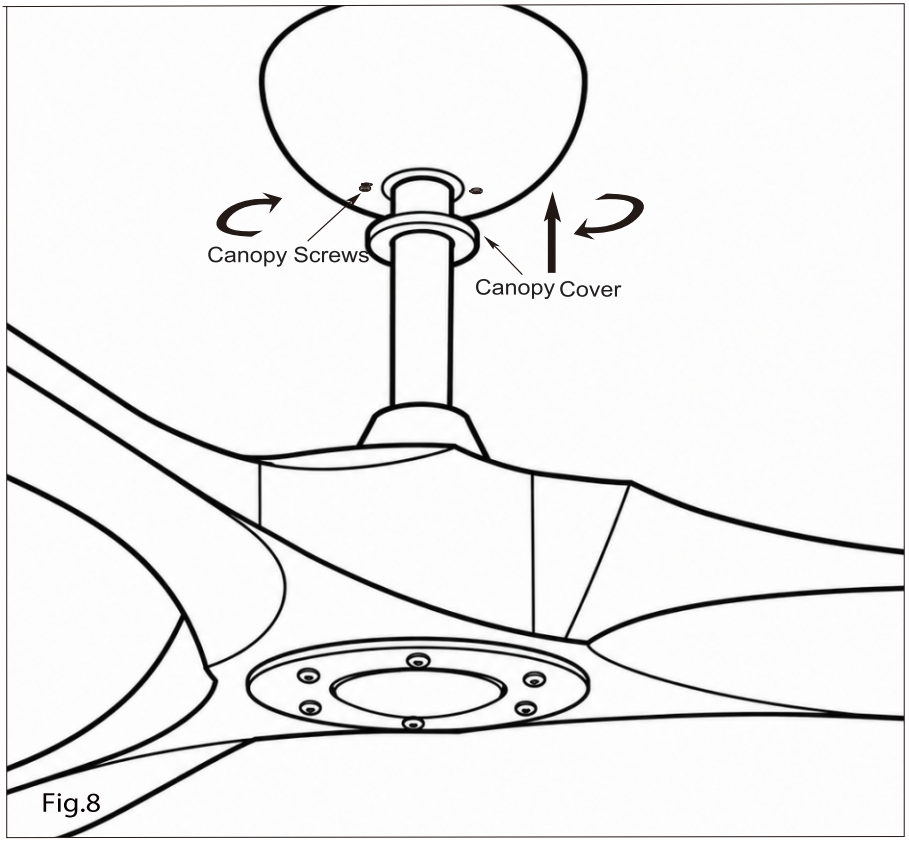

Fig.8

NOTE: **You have completed all the installation steps. Check if any steps have been missed and if any excess parts have not been installed.**

Troubleshooting Guide

If you have difficulty in operating your new ceiling fan it may be the result of incorrect assembly,installation,or wiring.In some cases these installation errors may be mistaken for defects.If you experience any faults please check this troubleshooting guide.

	Problem	Suggested Remedy
1	If fan does not work.	□ Check the main and branch circuit fuses or breakers. □ Check the line wire connections to the fan and switch wire connections in the switch housing. □ Check the battery in the remote control. □ Ensure you are in the normal range of 10-20 feet.
2	If fan sounds noisy.	□ Ensure all motor housing screws are snug. □ Ensure the screws that attach the fan blade bracket to the motor hub are tight. □ Ensure the wire nut connections are not rattling against each other or the interior wall of the switch housing. □ Allow a 24-hour “breaking in” period. Most noises associated with a new fan disappear during this time. □ If you are using the Ceiling Fan light kit, ensure the screws securing the glassware are tight. Check that the light bulbs are also secure. □ Ensure the canopy is a short distance from the ceiling. It should not touch the ceiling. □ Ensure your outlet box is secure and rubber isolator pads were used between the mounting plate and outlet box.
3	If fan wobbles.	□ Check that all blades are screwed firmly into blade holders. □ Check that all blade holders are tightened securely to motor. □ Make sure that canopy and mounting bracket are tightened securely to ceiling junction box and junction box is mounted firmly to ceiling joist. □ Most fan wobble problems are caused when blade levels are unequal.Check this level by selecting a point on the ceiling above the tip of one of the blades keeping measure within 1/8 in.Rotate the fan until the next blade is positioned for measurement.Repeat for each blade.If all blade levels are not equal you can adjust blade levels by the following procedure.To adjust a blade tip down insert a washer(not supplied)between the blade and blade holder at the screw closest to the motor.To adjust a blade tip up insert washer(not supplied)between the blade and blade holder at the two screws farthest from the motor. □ If blade wobble is still noticeable interchanging two adjacent (side by side)blades can redistribute the weight and possibly result in smoother operation.
4	If light does not work.	□ Check blue wire from fan to make sure it is connected to hot wire from the house. □ Check for loose or disconnected wires in fan switch housing. □ Check for loose or disconnected wires in light kit. □ Check for faulty light bulbs.CAUTION:Make sure main power is turned off before entering switch housing. □ If the fan light shuts off shortly after being switched on it may be due to excessive current demand.Turn off power to the fan and replace the light bulbs with lower wattage bulbs.Turn on power to the fan using the pull chain,wall switch,or remote control (whichever is installed on the particular fan).