ITEM #5497055/5497056/5497057
MODEL #RDS44MBK5LR/RDS44BNK5LR/RDS44MW5LR

REIDSPORT LED

HARBOR BREEZE and logo design are trademarks or registered trademarks of LF, LLC. All rights reserved.

Español p. 22

ATTACH YOUR RECEIPT HERE

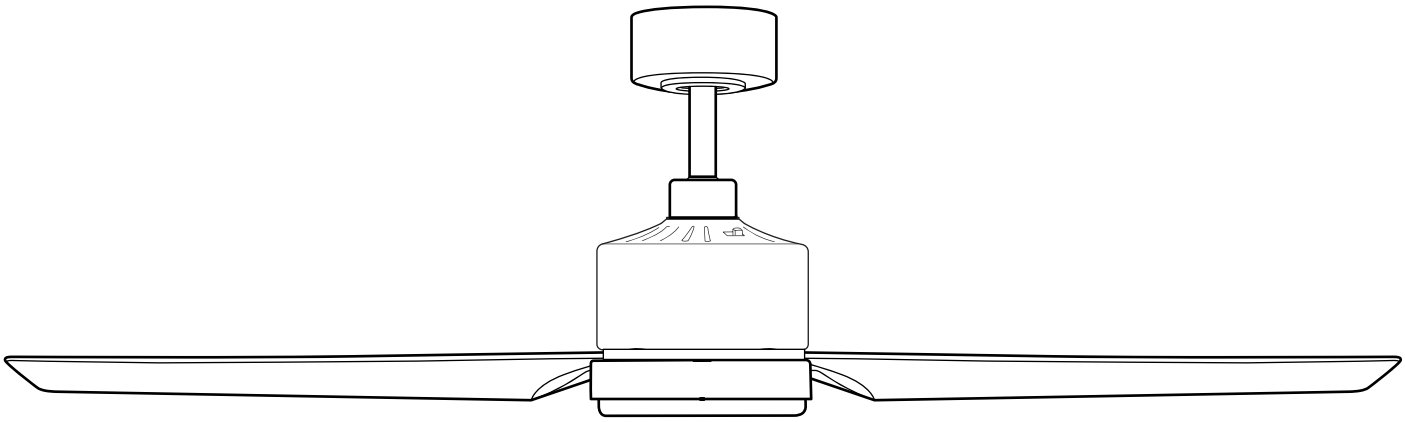

Intertek
4009218
APPROVED FOR USE
IN DAMP LOCATIONS

Purchase Date _____

Thank you for purchasing this HARBOR BREEZE product.
Questions, problems, missing parts?
Before returning, contact us on:
888-251-1003, 8 a.m-8 p.m., EST, Monday-Sunday.

TABLE OF CONTENTS

Safety Information 2

Package Contents 5

Hardware Contents 6

Preparation 6

Initial Installation 6

Downrod-Style Fan Mounting 8

Closemount-Style Fan Mounting 10

Wiring 11

Final Installation 14

Operating Instructions 17

Care and Maintenance 19

Troubleshooting 20

Limited Lifetime Warranty 21

Replacement Parts List 21

SAFETY INFORMATION

CAUTION: Changes or modifications not approved by the party responsible for compliance could void the user's authority to operate the equipment.

*NOTE: This equipment has been tested and found to comply with the limits for a Class B digital device, pursuant to Part 15 of the FCC Rules. These limits are designed to provide reasonable protection against harmful interference in a residential installation. This equipment generates, uses and can radiate radio frequency energy and, if not installed and used in accordance with the instructions, may cause harmful interference to radio communications. However, there is no guarantee that interference will not occur in a particular installation. If this equipment does cause harmful interference to radio or television reception, which can be determined by turning the equipment off and on, the user is encouraged to try to correct the interference by one or more of the following measures:

* Reorient or relocate the receiving antenna.
* Increase the separation between the equipment and receiver.
* Connect the equipment into an outlet on a circuit different from that to which the receiver is connected.

Consult the dealer or an experienced radio/TV technician for help.

The device complies with Part 15 of the FCC Rules. Operation is subject to the following two conditions: (1) this device may not cause harmful interference, (2) this device must accept any interference received, including interference that may cause undesired operation.

Distributed by: Litex Industries Inc., P.O. Box 535639, Grand Prairie, TX, 75050; 800-527-1292

NOTE: Dimmable to 10%.

SAFETY INFORMATION

READ AND SAVE THESE INSTRUCTIONS

- Do not discard fan carton or inserts. Should this fan need to be returned to the factory for repairs, it must be shipped in its original packaging to ensure proper protection against damage that might exceed the initial cause for return.
- Make sure all electrical connections comply with local codes, ordinances, the National Electrical Code and ANSI/NFPA 70-1999. Hire a qualified electrician or consult a do-it-yourself wiring handbook if you are unfamiliar with installing electrical wiring.
- Make sure the installation site you choose allows a minimum clearance of 7 ft. from the blades to the floor and at least 30 in. from the end of the blades to any obstruction.
- After you install the fan, make sure all connections are secure to prevent the fan from falling.
- The net weight of this fan including the light kit is: 18.48 lbs.

⚠ DANGER

When using an existing outlet box, make sure the outlet box is securely attached to the building structure and can support the full weight of the fan. Failure to do this can result in serious injury or death. The stability of the outlet box is essential in minimizing wobble and noise in the fan after installation is complete.

To reduce the risk of serious bodily injury, DO NOT use power tools to assemble any part of the fan, including the blades.

Before proceeding, be sure to shut off electricity at main switch or circuit breaker in order to avoid electrical shock.

⚠WARNING

To reduce the risk of fire, electrical shock or personal injury, mount fan to outlet box marked "ACCEPTABLE FOR FAN SUPPORT OF 35 LBS. (15.87 KG) OR LESS" and use mounting screws provided with the outlet box. Most outlet boxes commonly used for the support of lighting fixtures are not acceptable for fan support and may need to be replaced. Consult a qualified electrician if in doubt.

When mounting fan to a ceiling outlet box, use a METAL octagonal outlet box; do NOT use a plastic outlet box. Secure the outlet box directly to the building structure. The outlet box and its support must be able to support the moving weight of the fan (at least 35 lbs.).

To avoid personal injury, the use of gloves may be necessary while handling fan parts with sharp edges.

To reduce the risk of fire, electrical shock or personal injury, wire connectors provided with this fan are designed to accept only one 12-gauge house wire and two lead wires from the fan. If your house wire is larger than 12-gauge or there is more than one house wire to connect to the corresponding fan lead wires, consult an electrician for the proper size wire connectors to use.

To reduce the risk of fire or electrical shock, do not use the fan with any solid state speed control device or control fan speed with a full range dimmer switch.

SAFETY INFORMATION

⚠ WARNING

To reduce the risk of fire, electrical shock or personal injury, do not bend the blades when installing them, balancing the blades or cleaning the fan. Do not insert objects between the rotating fan blades.

To reduce the risk of personal injury, use ONLY parts provided with this fan. The use of parts OTHER than those provided with this fan will void the warranty.

Before installation, be sure to shut off electricity at main switch or circuit breaker in order to avoid electrical shock.

⚠ CAUTION

Be sure outlet box is properly grounded and that a ground wire (green or bare) is present.

Once installation is complete, carefully check all screws, bolts and nuts on fan motor assembly to ensure that they are secured.

Read all instructions and safety information before installing your new fan. Review the accompanying assembly diagrams.

Do NOT tamper with or attempt to repair LED component. The light source is designed for this specific application and should not be serviced by untrained personnel. If any servicing is required, call our customer service department.

PACKAGE CONTENTS

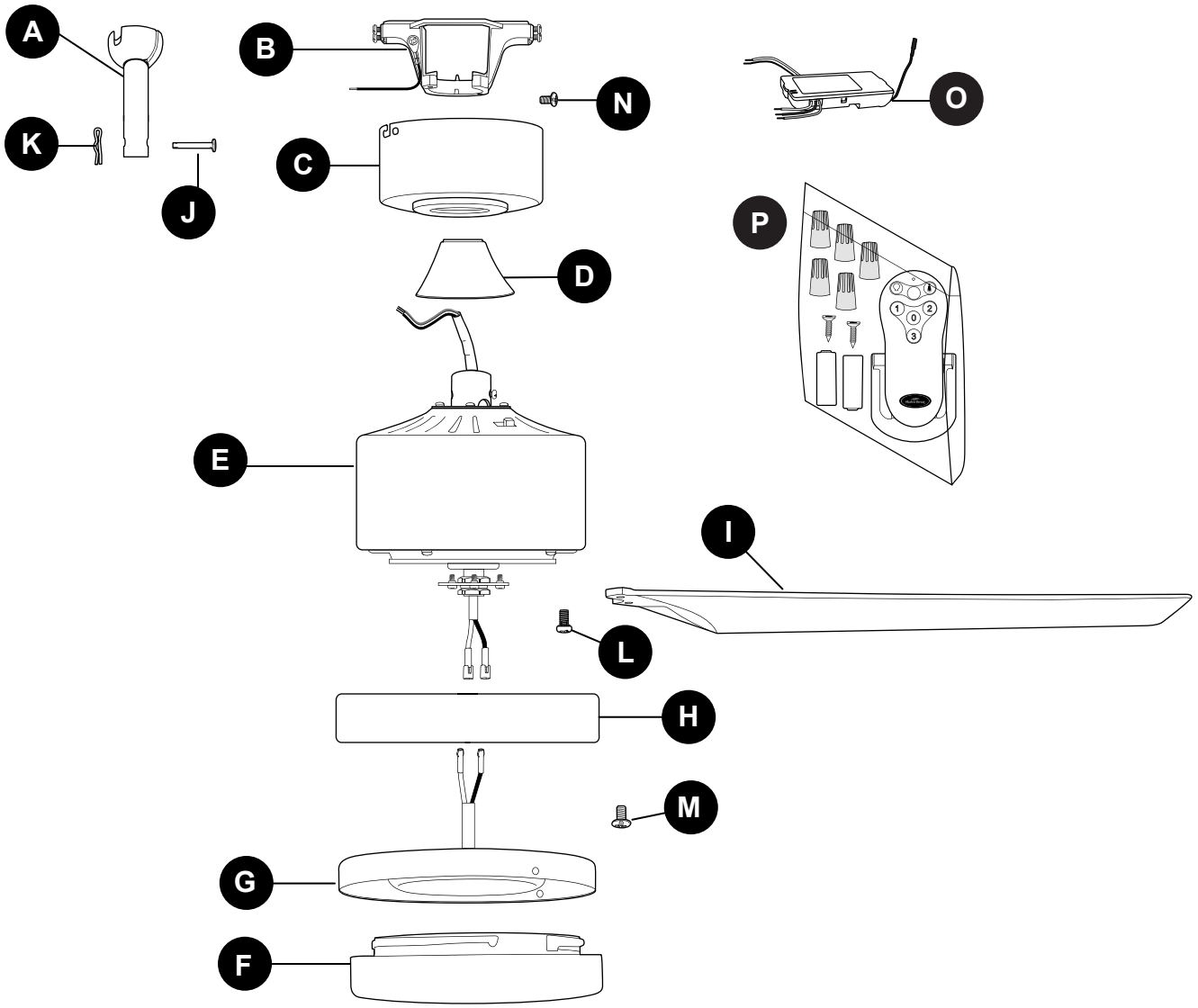

PART	DESCRIPTION	QUANTITY
A	Downrod	1
B	Mounting Bracket (preassembled)	1
C	Canopy (preassembled)	1
D	Yoke Cover	1
E	Motor Housing	1
F	Shade	1
G	LED Light Kit	1
H	Fitter Plate	1
I	Blade	5
J	Pin (preassembled)	1
K	Clip (preassembled)	1

PART	DESCRIPTION	QUANTITY
L	Motor Plate Screw (preassembled)	3
M	Fitter Plate Screw (preassembled)	3
N	Canopy Mounting Screw (preassembled)	4
O	Remote Control Receiver	1
P	Remote Pack	1

⚠ **IMPORTANT REMINDER**: You must use the parts provided with this fan for proper installation and safety.

HARDWARE CONTENTS (shown actual size)

AA

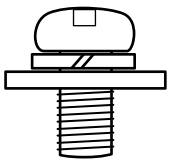

Blade Screw/
Lock Washer/
Flat Washer

Qty. 10
+ 1 extra

BB

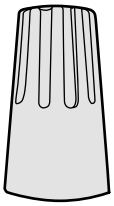

Wire
Connector

Qty. 4

PREPARATION

Before beginning assembly of product, make sure all parts are present. Place motor on carpet or on foam to avoid damage to finish. Compare parts with package contents list and hardware contents list. If any part is missing or damaged, do not attempt to assemble the product.

Estimated Assembly Time: 120 minutes

Tools Required for Assembly (not included): Electrical Tape, Phillips Screwdriver, Pliers, Safety Glasses, Stepladder, Wire Strippers and Precision Screwdriver (2 in.)

Helpful Tools (not included): AC Tester Light, Tape Measure, Do-It-Yourself Wiring Handbook and Wire Cutters

INITIAL INSTALLATION

1. Turn off circuit breakers and wall switch to the fan supply line leads.

   ⚠ **DANGER:** Failure to disconnect power supply prior to installation may result in serious injury or death.

1

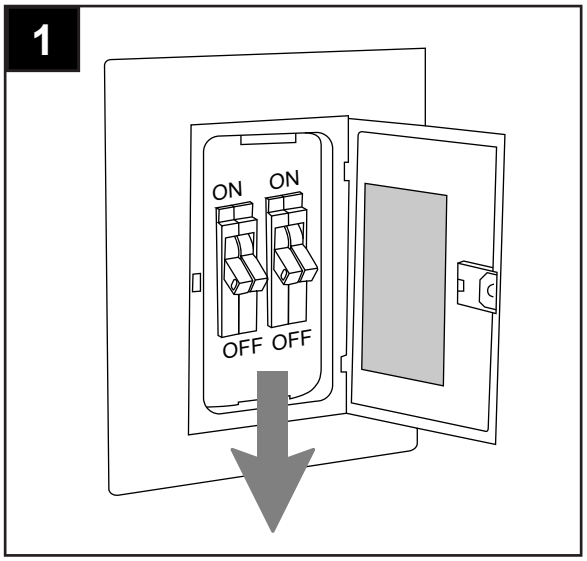

INITIAL INSTALLATION

2. Determine mounting method to use.
   A. Downrod mount (standard or angled ceiling).
   B. Closemount (standard ceiling only).
   IMPORTANT: If using the angle mount, check to make sure the ceiling angle is not steeper than 19°.

   ***Helpful Hint**: Downrod-style mounting is best suited for ceilings 8 ft. or higher. For taller ceilings you may want to use a longer downrod (not included). Angle-style mounting is best suited for angled or vaulted ceilings. A longer downrod is sometimes necessary to ensure proper blade clearance. Closemount mounting is more suitable for ceilings lower than 8 ft. high.

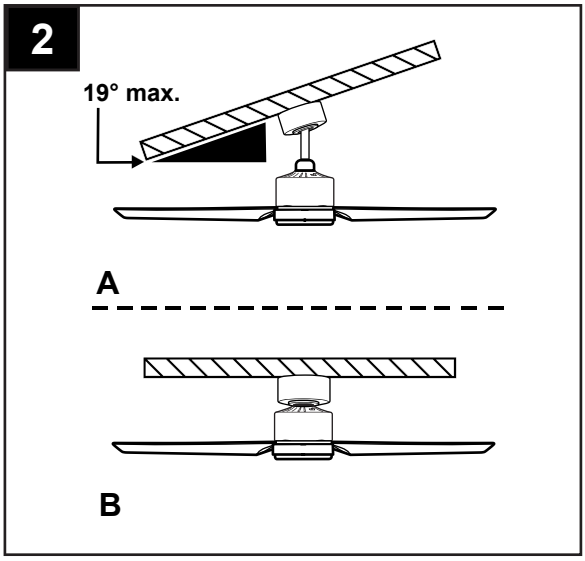

3. Check to make sure blades (I) will be at least 30 inches from any obstruction. Check downrod (A) length to ensure blades (I) will be at least 7 ft. above the floor.

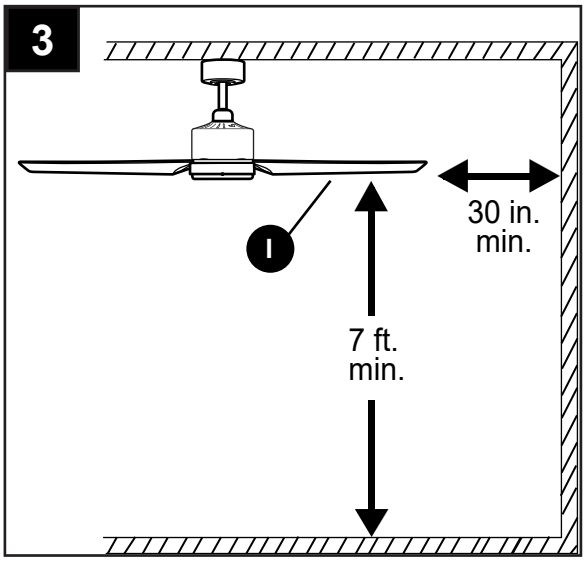

4. Loosen canopy mounting screws (N) in slotted holes of canopy (C) and remove the other two canopy mounting screws (N); save canopy mounting screws (N) for later use.

   Remove mounting bracket (B) from canopy (C).

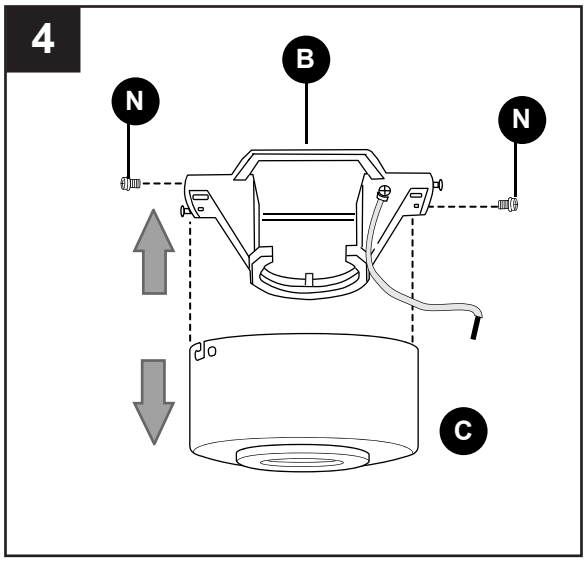

INITIAL INSTALLATION

5. Secure mounting bracket (B) to outlet box (not included) using screws, spring washers and flat washers provided with the outlet box.

   ***NOTE:** It is very important you use the proper hardware when installing the mounting bracket (B) as this will support the fan.

   IMPORTANT: If using the angle mount, make sure open end of mounting bracket (B) is installed facing the higher point of the ceiling, and ensure the ceiling angle is not steeper than 19°.

   For **DOWNROD-STYLE FAN MOUNTING**, proceed to Step 1 below.

   For **CLOSEMOUNT-STYLE FAN MOUNTING**, skip to page 10.

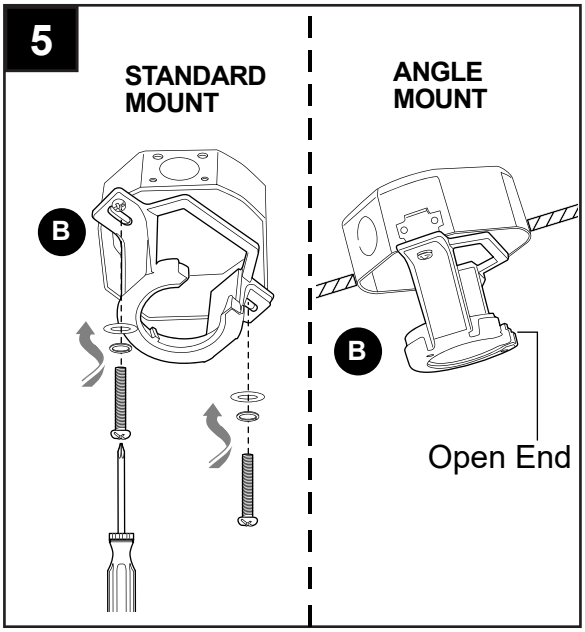

DOWNROD-STYLE FAN MOUNTING

1a. Remove pin (J) and clip (K) from downrod (A).

1b. Partially loosen preassembled set screws and nut in yoke at top of motor housing (E).

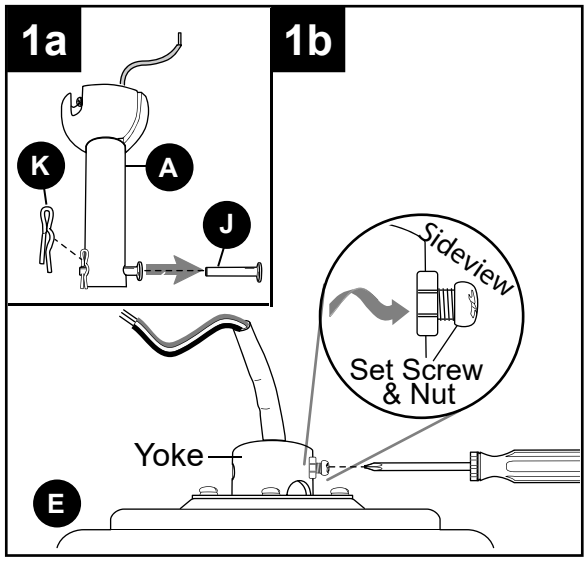

2. Insert downrod (A) through yoke cover (D) and canopy (C). Thread wires from motor housing (E) up through downrod (A).

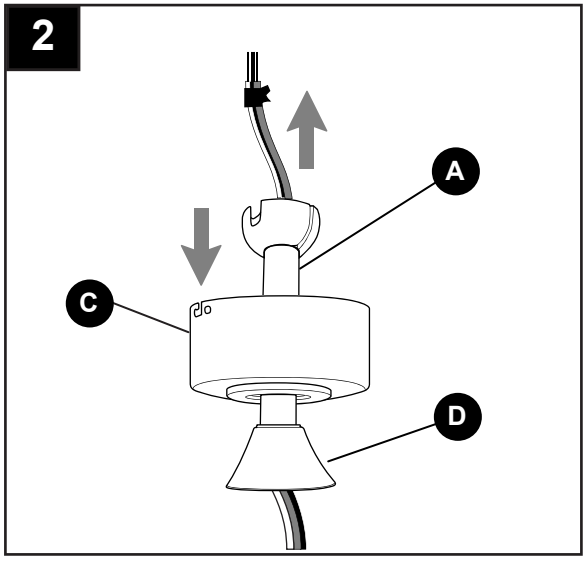

DOWNROD-STYLE FAN MOUNTING

3. Slip downrod (A) into yoke, align holes and re-install pin (J) and clip (K). Tighten downrod set screws and then tighten nut.

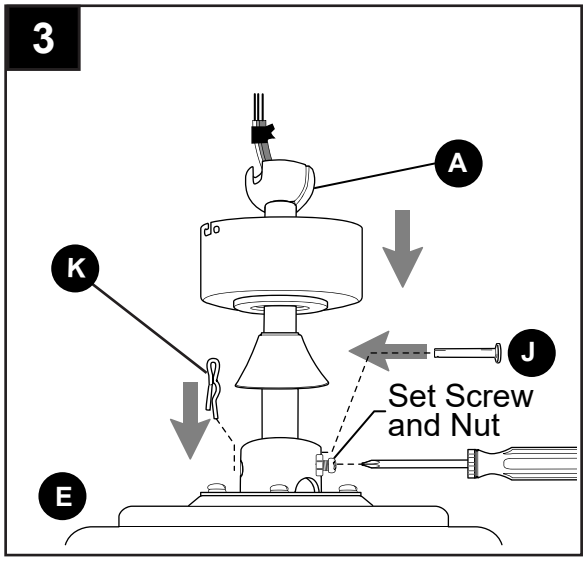

4. Depending on the length of downrod you use, you may need to cut the lead wires back to simplify the wiring. If you decide to cut back the lead wires, it is suggested you do so in the following manner:

   Take the lead wires and make sure you have pulled them all the way through the top of the downrod. Start at the TOP of the hanging ball on the downrod and measure 8 in. of lead wire, and then cut the excess wire off with wire cutters (not included).

   NOTE: If you do ***not*** cut back the lead wires, ***Steps 4 and 5 are not necessary and you may proceed to Step 6 instead***.

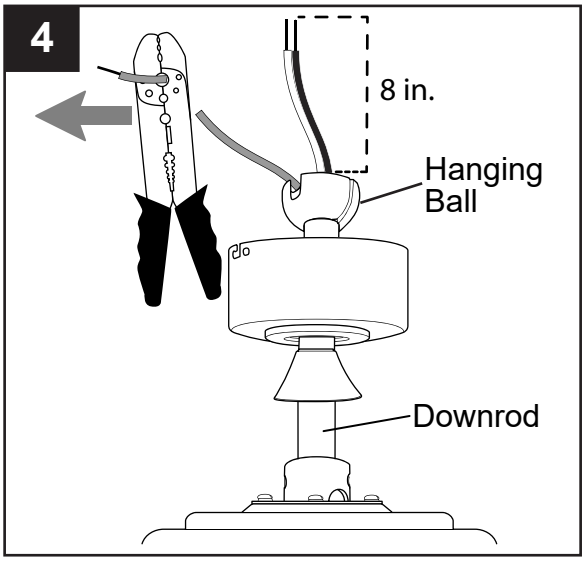

5. If you cut back the lead wires in Step 4, strip 3/4 in. of insulation from end of each wire -- WHITE, BLACK, GREEN and BLUE (if applicable). Twist stripped ends of each strand of wire within the insulation with pliers (not included).

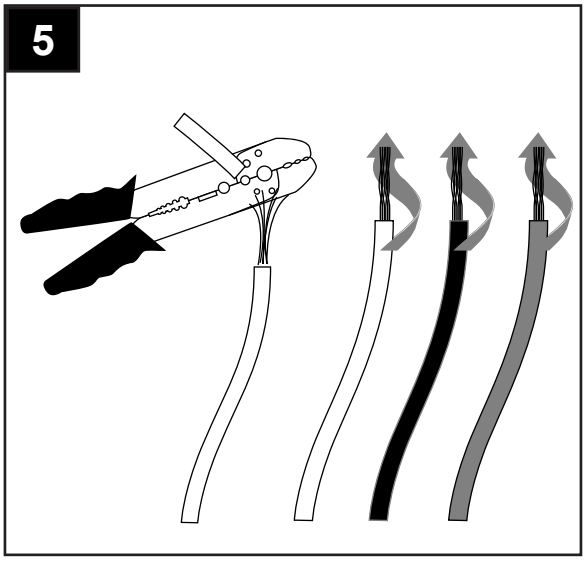

DOWNROD-STYLE FAN MOUNTING

6. Install hanging ball of downrod (A) into opening of mounting bracket (B). Align one of the slots in hanging ball with the tab in mounting bracket (B).

   DANGER: Failure to align one of the slots in hanging ball with the tab in mounting bracket (B) may result in serious injury or death.

   Continue to **WIRING** on page 11.

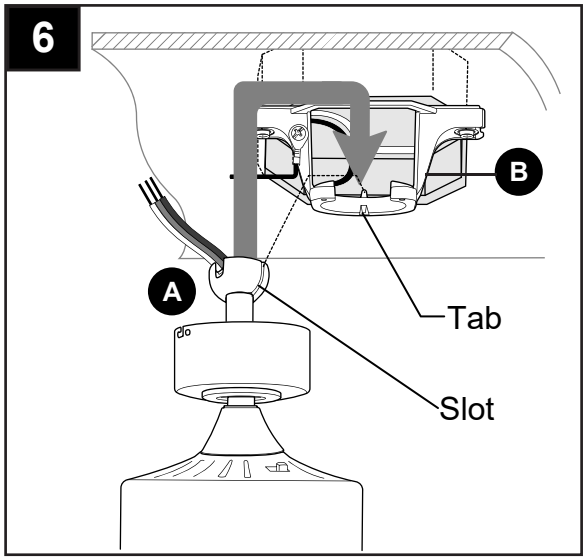

CLOSEMOUNT-STYLE FAN MOUNTING

1. Remove preassembled canopy cover from bottom of canopy (C).
   NOTE: It may be necessary to use the handle end of a screwdriver (not included) to remove the canopy cover by tapping on the canopy cover from the *inside* of the canopy (C).

   NOTE: The downrod (A), yoke cover (D) and canopy cover are not used in this type of installation.

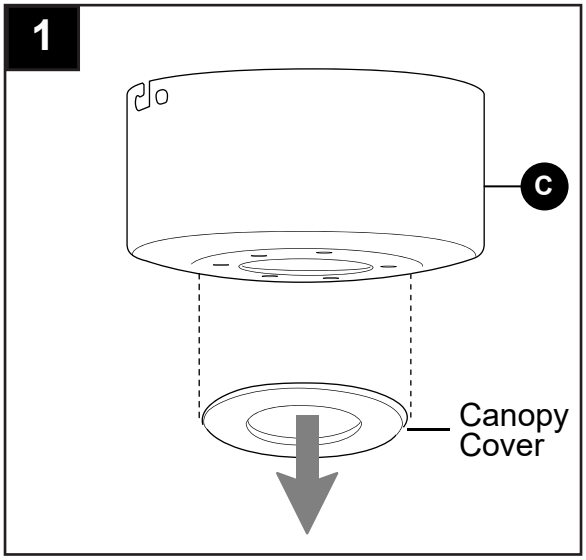

2. Remove every other preassembled screw/lock washer from top of motor housing (E).

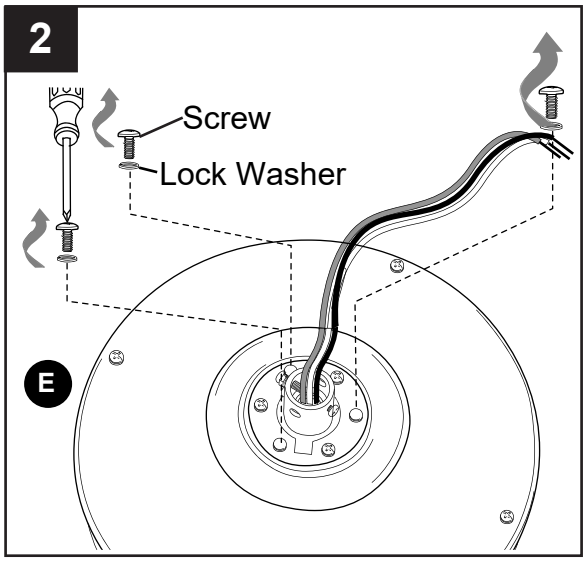

CLOSEMOUNT-STYLE FAN MOUNTING

3. Pull wires up through hole in the middle of the canopy (C) and attach canopy (C) to motor housing (E) using the three screws/lock washers previously removed.

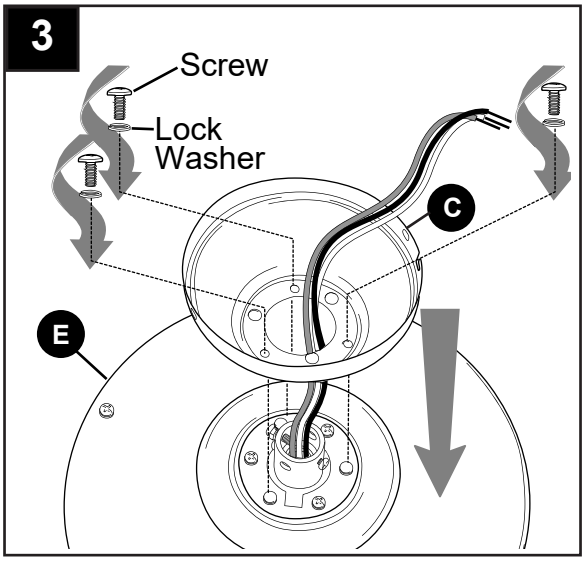

4. Temporarily hang fan on the tab on the mounting bracket (B) using one of the non-slotted holes in the canopy (C).

   Continue to **WIRING** below.

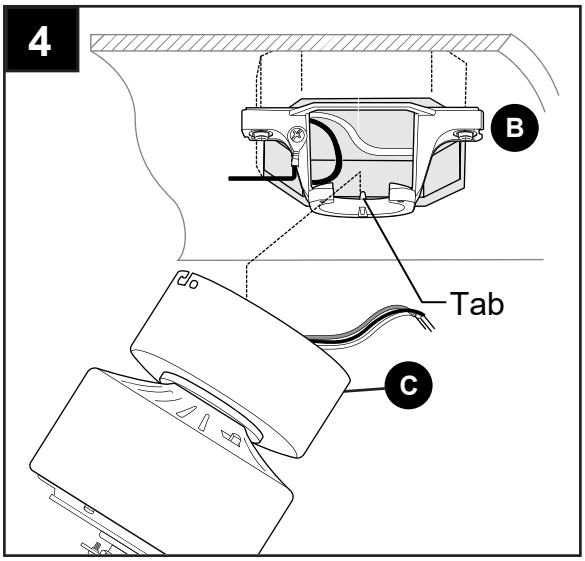

WIRING

⚠ **WARNING:** To reduce the risk of fire, electrical shock or personal injury, wire connectors provided with this fan are designed to accept only one 12-gauge house wire and two lead wires from the fan. If your house wire is larger than 12-gauge or there is more than one house wire to connect to the corresponding fan lead wires, consult an electrician for the proper size wire connectors to use.

⚠ **CAUTION:** Be sure outlet box is properly grounded and that a ground (GREEN or BARE) wire is present.

⚠ **WARNING:** If house wires are different colors than referred to in the following steps, stop immediately. A professional electrician is recommended to determine wiring.

⚠ **WARNING:** Using a full range dimmer switch (not included) to control fan speed will cause a loud humming noise from fan. To reduce the risk of fire or electrical shock, do NOT use a full range dimmer switch to control fan speed.

WIRING

1a. **IMPORTANT:** Make the necessary wiring connections for remote control operation as detailed in Step 1b below. For each wire connection, use one of the wire connectors from the remote pack (P), making sure to screw wire connector on in a clockwise direction.

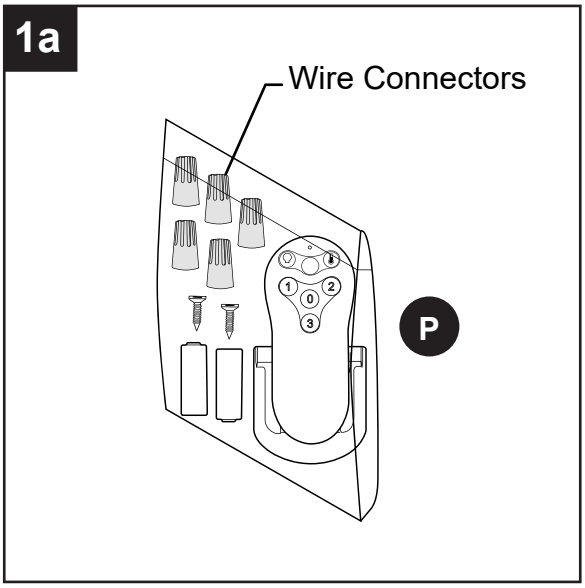

1b. Connect all GROUND (GREEN) wires from fan (on downrod (A) and mounting bracket (B)) to BARE/GREEN supply wire from ceiling.

Connect BLACK wire (labeled AC IN L) from remote control receiver (O) to BLACK supply wire from ceiling.

Connect WHITE wire (labeled AC IN N) from remote control receiver (O) to WHITE supply wire from ceiling.

Connect BLUE wire (labeled FOR LIGHT) from remote control receiver (O) to BLUE wire from motor housing assembly (E).

Connect BLACK wire (labeled TO MOTOR L) from remote control receiver (O) to BLACK wire from motor housing assembly (E).

Connect WHITE wire (labeled TO MOTOR N) from remote control receiver (O) to WHITE wire from motor housing assembly (E).

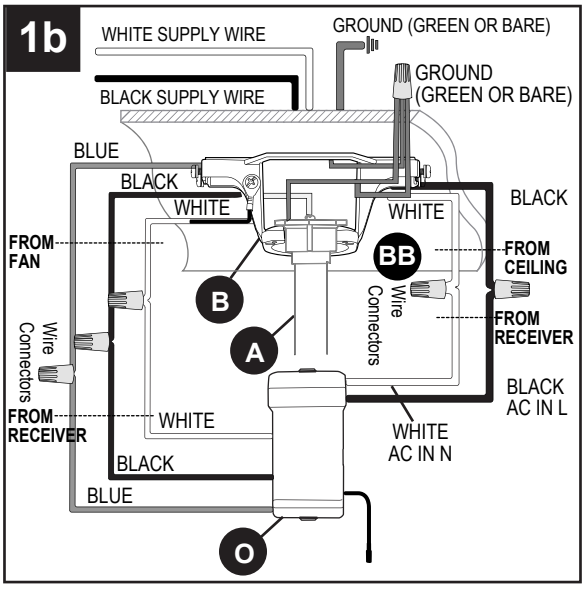

WIRING

2. Wrap electrical tape (not included) around each individual wire connector (BB) down to the wire.

   WARNING: Make sure no bare wire or wire strands are visible after making connections. Place GREEN and WHITE connections on opposite side of the outlet box from the BLACK and BLUE (if applicable) connections.

Hardware Used

BB	Wire Connector	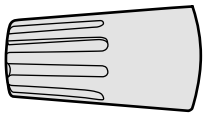	x 4

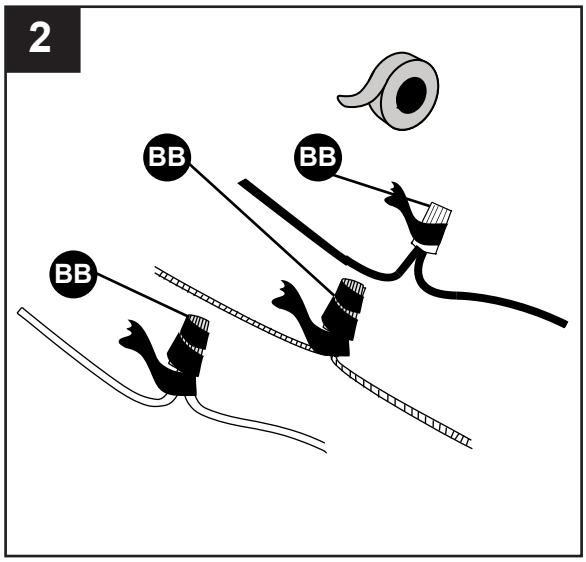

3. Gently slide remote control receiver (O) flat-side up into mounting bracket (B). Turn spliced/taped wires upward and gently push wires and wire connectors into outlet box. Let antenna from remote control receiver (O) hang to the side.

   NOTE: The remote control included with this fan meets the following requirements:

   a. Not for use with solid state fans.

   b. Electrical rating: 120V / 60 Hz; motor amps:1.25 MAX.

   Should you choose to use a different remote control with this fan, it must also meet these same requirements.

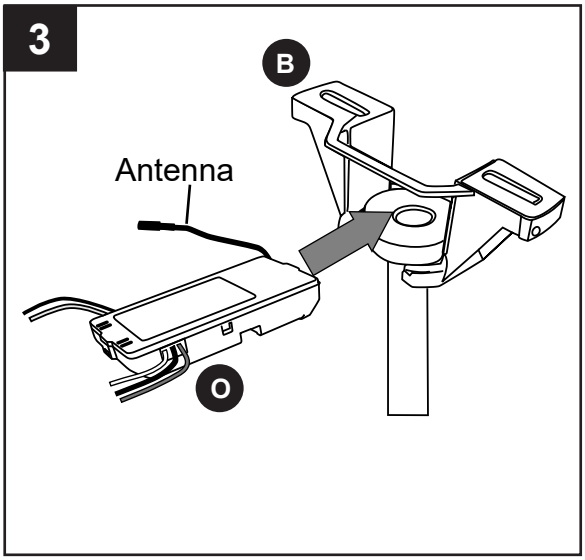

FINAL INSTALLATION

1. Lift canopy (C) to mounting bracket (B) aligning slotted holes in canopy (C) with loosened canopy mounting screws (N) in mounting bracket (B). Twist canopy (C) clockwise to lock. Re-insert the two canopy mounting screws (N) that were previously removed (Step 4, Page 7) and tighten all canopy mounting screws (N) securely.

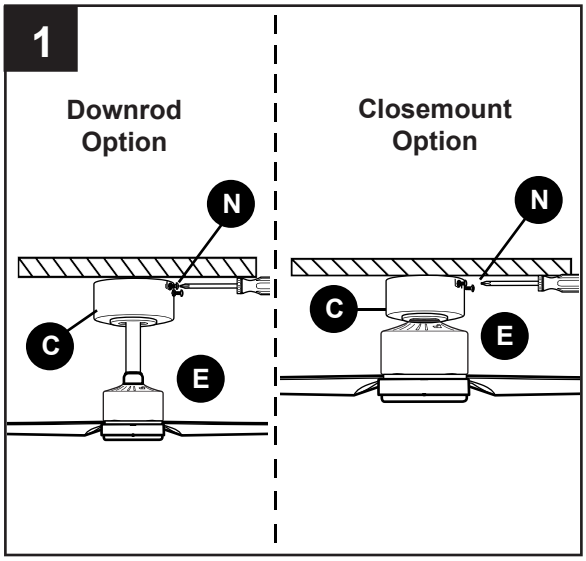

2. ⚠ **DANGER**: To reduce the risk of serious bodily injury, DO NOT use power tools to assemble the blades (I). If screws are overtightened, blades (I) may crack and break.

   Noting the THIS SIDE UP label on blade (I), align holes in blade (I) with holes on the bottom of motor housing (E). Partially insert two blade screws/lock washers/flat washers (AA) to attach blade (I) to motor housing (E). Tighten blade screws/washers (AA) securely. Repeat Step 2 for remaining blades (I).

   NOTE: Make sure to completely secure each blade (I) before proceeding to the next.

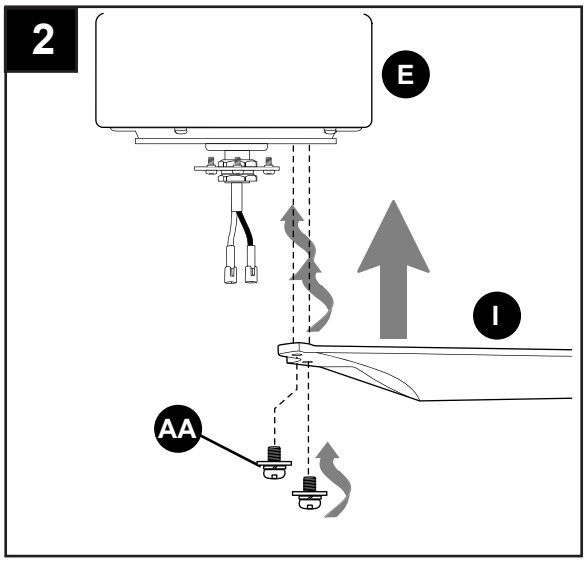

Hardware Used

AA	Blade Screw/ Lock Washer/ Flat Washer	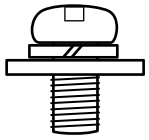	x 10

FINAL INSTALLATION

3. Partially loosen two motor plate screws (L) in motor plate on underside of motor housing (E) and remove the other motor plate screw (L). Align slotted holes in fitter plate (H) with loosened motor plate screws (L), allowing molex connections from motor housing (E) to come through hole in fitter plate (H). Twist fitter plate (H) to lock. Re-insert the motor plate screw (L) previously removed and securely tighten all three motor plate screws (L).

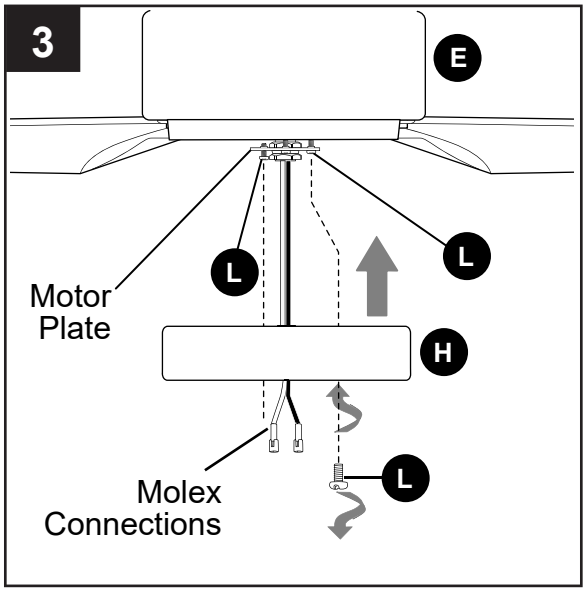

4. Partially loosen two fitter plate screws (M) in metal posts on underside of the fitter plate (H) and remove the other fitter plate screw (M).

   Locate molex connections from motor housing (E) and remove plastic that holds these wires together.

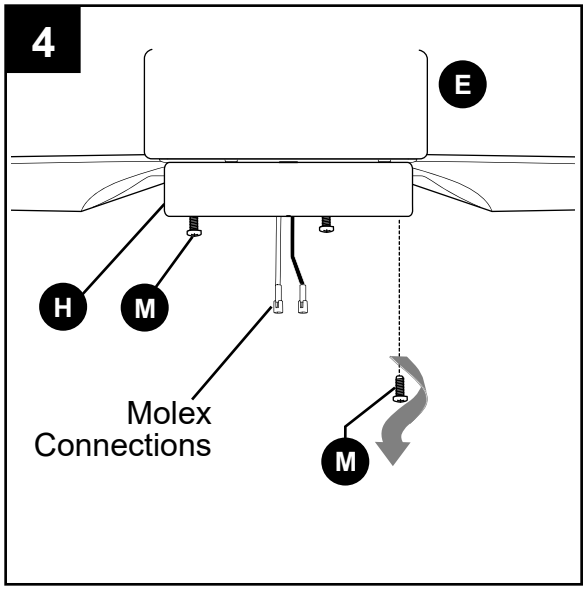

5. Connect WHITE wire from LED light kit (G) to WHITE wire from motor housing (E). Connect BLACK wire from LED light kit (G) to BLUE (or BLACK) wire from motor housing (E). Make sure molex connections snap together securely.

   NOTE: It may be necessary to pull back the sleeve on the wires to observe the wire color.

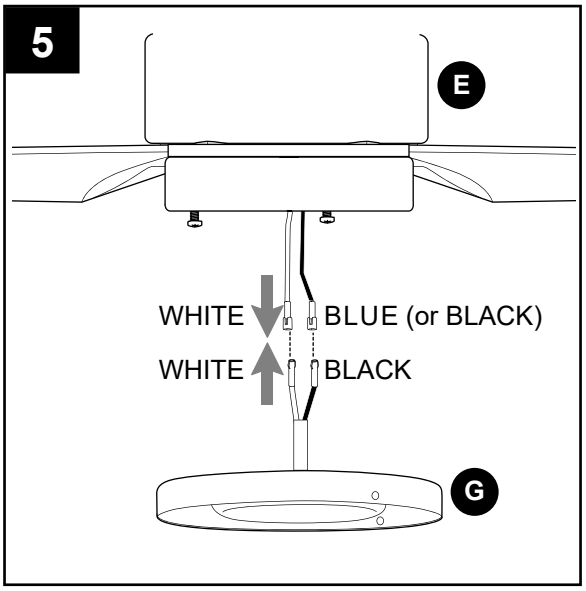

FINAL INSTALLATION

6. Carefully arrange wiring within the fitter plate (H) to ensure wires do not get pinched when attaching the LED light kit (G).

   Align slotted holes in LED light kit (G) with loosened fitter plate screws (M) on posts on fitter plate (H). Twist LED light kit (G) to lock. Re-insert the previously removed fitter plate screw (M) (step 4, Page 15) and securely tighten all fitter plate screws (M).

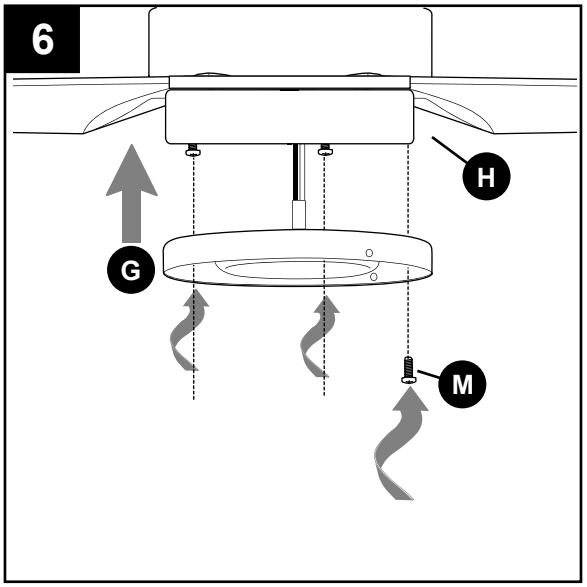

7. Align slots on shade (F) with protrusions on inside of fitter plate (H). Turn shade (F) clockwise until it no longer turns.
   NOTE: Pull down gently on the shade (F) to make sure it is secured completely.

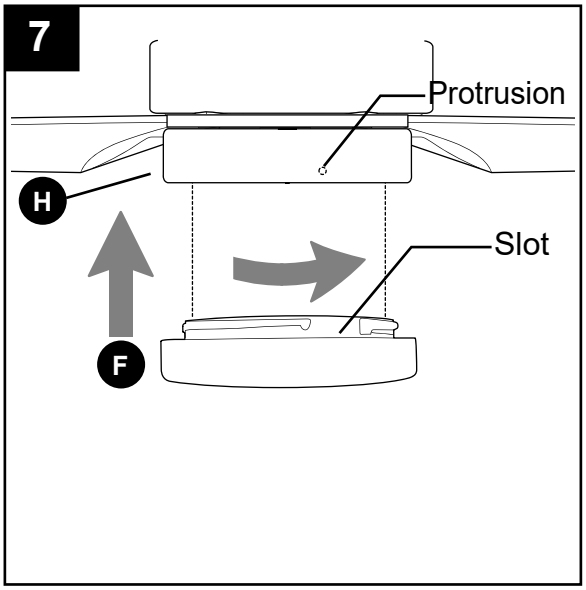

8. If you wish to use the remote control bracket from remote pack (P), install screws from remote pack (P) through bracket and into the desired installation site. The remote control transmitter from remote pack (P) rests inside the bracket.

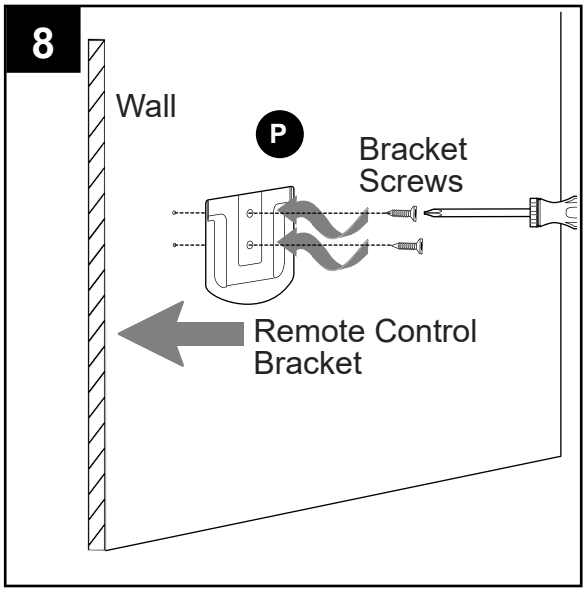

OPERATING INSTRUCTIONS

⚠ **CAUTION:** The remote control transmitter can be programmed to multiple receivers or fans. If this is not desired, turn wall switch off to any other programmable receiver or fan.

FCC Compliance Notice for Remote Control and LED Light Kit
CAUTION: Changes or modifications not approved by the party responsible for compliance could void the user's authority to operate the equipment.

This device complies with Part 15 of the FCC Rules. Operation is subject to the following two conditions: (1) this device may not cause harmful interference, (2) this device must accept any interference received, including interference that may cause undesired operation.

NOTE: This equipment has been tested and found to comply with the limits for a Class B digital device, pursuant to Part 15 of the FCC Rules. These limits are designed to provide reasonable protection against harmful interference in a residential installation. This equipment generates, uses and can radiate radio frequency energy and, if not installed and used in accordance with the instructions, may cause harmful interference to radio communications. However, there is no guarantee that interference will not occur in a particular installation. If this equipment does cause harmful interference to radio or television reception, which can be determined by turning the equipment off and on, the user is encouraged to try to correct the interference by one or more of the following measures:

* Reorient or relocate the receiving antenna.
* Increase the separation between the equipment and receiver.
* Connect the equipment into an outlet on a circuit different from that to which the receiver is connected.
* Consult the dealer or an experienced radio/TV technician for help.

Distributed by: Litex Industries Inc., P.O. Box 535639, Grand Prairie, TX, 75053; 1-800-527-1292

1. Locate batteries and remote control transmitter in remote pack (P). Remove protective covering from each one and discard protective covering. Remove battery cover from back of remote control transmitter. Install two AAA batteries (included).

   ⚠ **WARNING:**Batteries are to be inserted with correct polarity.

   ⚠ **WARNING:** ***Choking Hazard*** - Small parts. Keep batteries away from children.

   NOTE: DO NOT mix old and new batteries; DO NOT mix alkaline, standard (carbon - zinc) or rechargeable (nickel - cadmium) batteries or equivalent.

   NOTE: Batteries are NOT rechargeable. Remove batteries with low or no charge and dispose of properly.

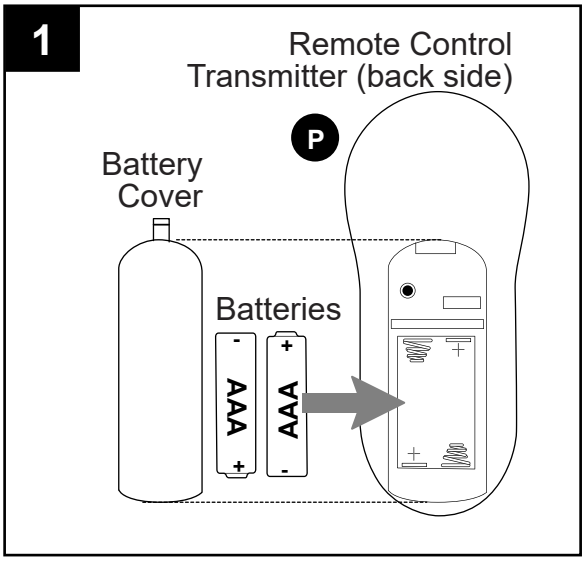

⚠ **CAUTION**: "DO NOT DISPOSE OF BATTERIES IN FIRE, BATTERIES MAY EXPLODE OR LEAK." - When disposing of household alkaline batteries, it is best to check with your local and state recycling or household hazardous waste coordinators concerning the specifics of the program in your area.

OPERATING INSTRUCTIONS

2. Restore electrical power. Within 30 seconds of powering fan, press and hold LEARN button on the back of remote control transmitter for 5 seconds (or until light turns on) in order to synchronize remote with fan motor. Use the remote control transmitter to test the light and fan functions to confirm the learning process is complete.

   Replace battery cover on remote control transmitter

   IMPORTANT: To prevent damage to remote control transmitter, remove the battery if not used for long periods. Store the remote control transmitter away from excess heat or humidity.

   NOTE: If fan and/or remote control fail(s) to operate or you have purchased a new remote control transmitter, make sure to turn the power off first.

3. Operation buttons on the panel of the remote control transmitter:

3 button	for fan HIGH speed
2 button	for fan MEDIUM speed
1 button	for fan LOW speed
0 button	to turn fan OFF
light button	to turn light ON or OFF
color button	to change/select color mode:

   – warm white
   – bright warm white
   – natural white
   – bright white
   – daylight

   Tap light button quickly to turn light off or on. Hold light button down to increase or decrease light. If you press light button in excess of 0.7 seconds, it becomes a dimmer. The light varies cyclically in 8 seconds. The light button has an auto resume function, which keeps the light at the same brightness as the last time it was turned off.

4. Use the fan reverse switch, located on the top of the motor housing (E), to optimize the fan for seasonal performance. A ceiling fan will allow you to raise your thermostat setting in summer and lower your thermostat setting in winter without feeling a difference in your comfort.

   ⚠ CAUTION: Turn fan off at wall switch and let blades (I) come to a complete stop before manually activating the reverse switch.

2

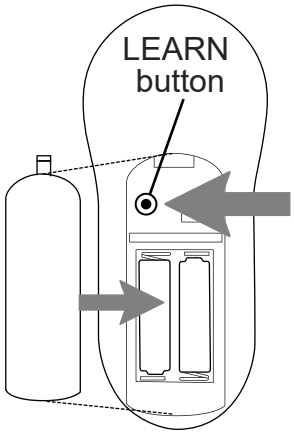

(back side)

Remote Control Transmitter

3

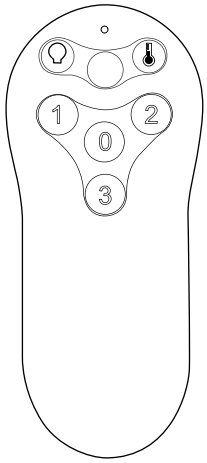

Remote Control Transmitter

4

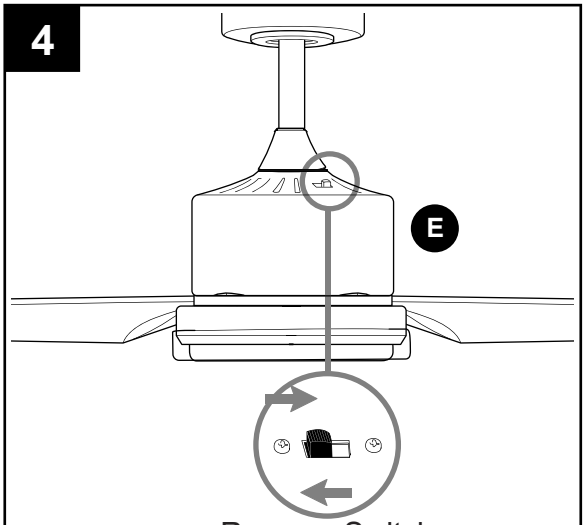

Reverse Switch

OPERATING INSTRUCTIONS

4A. In **warmer** weather, setting the reverse switch in the LEFT position will result in downward airflow creating a wind chill effect.

4B. In **cooler** weather, setting the reverse switch in the RIGHT position will result in upward airflow that can help move stagnant, hot air off the ceiling area.

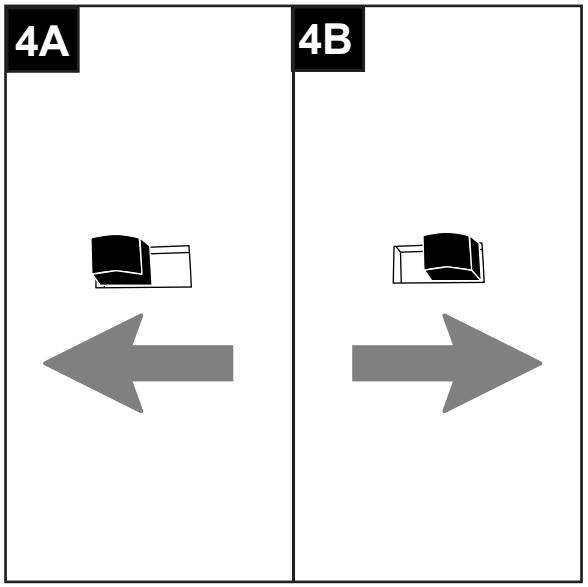

4C. **IMPORTANT:** Reverse switch must be set either ***completely*** LEFT or ***completely*** RIGHT for fan to function. If the reverse switch is set in the middle position, fan will not operate.

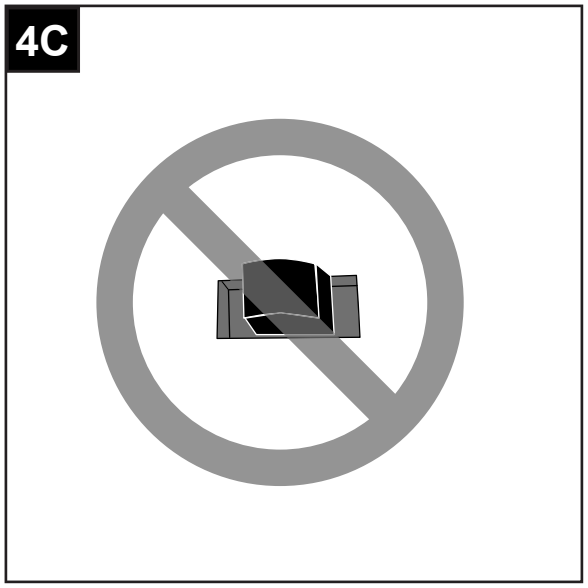

CARE AND MAINTENANCE

At least twice each year, lower canopy (C) to check downrod (A) assembly, and then tighten all screws on fan. Clean motor housing assembly (E) with only a soft brush or lint-free cloth to avoid scratching the finish. Clean blades (I) with a lint-free cloth.

IMPORTANT: Shut off main power supply before beginning any maintenance. Do not use water or a damp cloth to clean the ceiling fan.

Total wattage for the LED light kit on this fan is 18 watts; do not attempt to replace the LEDs.

TROUBLESHOOTING

⚠ **WARNING:** Before beginning work, shut off the power supply to avoid electrical shock.

PROBLEM	POSSIBLE CAUSE	CORRECTIVE ACTION
Fan does not move.	1. Reverse switch not engaged. 2. Power is off or fuse is blown. 3. Faulty wire connection.	1. Push switch firmly either left or right. 2. Turn power on or check fuse. 3. Turn power off. Loosen canopy and check all connections.
Noisy operation.	1. Blades are loose. 2. Cracked blade. 3. Full range dimmer switch. 4. Fan is new.	1. Tighten all blade screws. 2. Replace blade. 3. Replace with an approved speed control device. 4. Allow fan a “break in” period of a few days, especially when running the fan at Medium and High speeds.
Excessive wobbling.	1. Blades are loose. 2. Blades incorrectly attached. 3. Unbalanced blades. 4. Fan not securely mounted. 5. Fan too close to vaulted ceiling. 6. Set screw(s) on motor housing yoke is (are) not tightened properly. 7. Set screw on hanging ball is not tightened properly.	1. Tighten all blade screws. 2. Re-install blades. 3. Switch one blade with a blade from the opposite side. 4. Turn power off. Carefully loosen canopy and verify that mounting bracket is secure. 5. Use a longer downrod or move fan to another location. 6. Tighten yoke set screw(s) securely. 7. Carefully loosen and lower canopy and verify that set screw on hanging ball is tightened securely.
Fan operates but light fails	1. Wires in canopy not wired properly. 2. Wall switch to fan is off. 3. Wires from LED light kit not wired correctly.	1. Check wires in canopy and, if necessary, re-wire according to instructions on pages 11 - 13. 2. Make sure that wall switch to fan is on. 3. Check wires from LED light kit and, if necessary, re-wire according to instructions on page 15.
Remote control fails to operate.	1. Remote control transmitter not synced with fan. 2. Battery not installed correctly. 3. Battery no longer working.	1. Refer to instructions in Step 2 on page 18. 2. Check that battery has been installed with correct polarity. 3. Replace battery according to instructions on page 17.

NOTE: A small amount of "wobble" is normal and should not be considered a defect.

LIMITED LIFETIME WARRANTY

Set forth below, the manufacture warrants the fan motor for this ceiling fan to be free from defects in workmanship and material for the life of the product. Also, subject to the limitations below, the manufacturer warrants all ceiling fan parts (“ceiling fan parts” excludes the motor and parts made in whole or in part with glass) to be free from defects in workmanship and material for a period of one year after the date of purchase by the original purchaser at retail.

All claims must be made by the original purchaser, whether such purchaser purchased the product through a store or contractor. Ceiling fan part defects must be reported within the first year from the date of purchase. Parts made in whole or in part with glass and the finishes of metal and other surfaces are not warranted.

Purchasers are responsible for all costs of removing and reinstalling the product. Any damage to any part caused by ordinary wear and tear, accident, misuse, or improper installation, is not covered by this warranty. The manufacturer assumes no responsibility whatsoever for fan installation. Any service performed by a non-licensed electrician will render the warranty invalid.

The manufacturer’s sole responsibility shall be to repair or replace the motor, parts, or product within the terms stated above. The manufacturer shall not be liable for any loss or damage of any kind, including any incidental or consequential damages resulting directly or indirectly, from any breach of warranty, express or implied, or any other failure of this product. Some states do not allow the exclusion or limitation of incidental or consequential damages so this limitation may not apply to you.
If the original purchaser ceases to own the fan, this warranty is voided.

Should the purchaser encounter a problem with your fan related to defects in workmanship or materials within the warranty period associated with the defective part, the manufacturer agrees to replace the defective part without charge, or at its option, to replace the ceiling fan with a comparable or superior model.

The manufacturer’s warranties are limited to the written warranties set out in this ceiling fan limited lifetime warranty. All other express and implied warranties, including, without limitation, the implied warranty of fitness for a particular purpose and the implied warranty of merchantability are disclaimed. Some states do not allow the disclaimer of implied warranties, so this disclaimer may not apply to you.

REPLACEMENT PARTS LIST

All parts are replaceable (see parts list in “Package Contents” on Page 5), however, only the parts listed below are under warranty. For replacement parts, call our customer service department at **888-251-1003**, 8 a.m. - 8 p.m., EST, Monday - Sunday.

PART	DESCRIPTION	PART#	PART#	PART#
A	Downrod	5497055-A	5497056-A	5497057-A
B	Mounting Bracket	5497055-B	5497056-B	5497057-B
C	Canopy	5497055-C	5497056-C	5497057-C
G	Light Kit Fitter	5497055-G	5497056-G	5497057-G
I	Blade	5497055-I	5497056-I	5497057-I

