7009-1BK

OPERATIONS MANUAL

Instruction

MADE IN CHINA

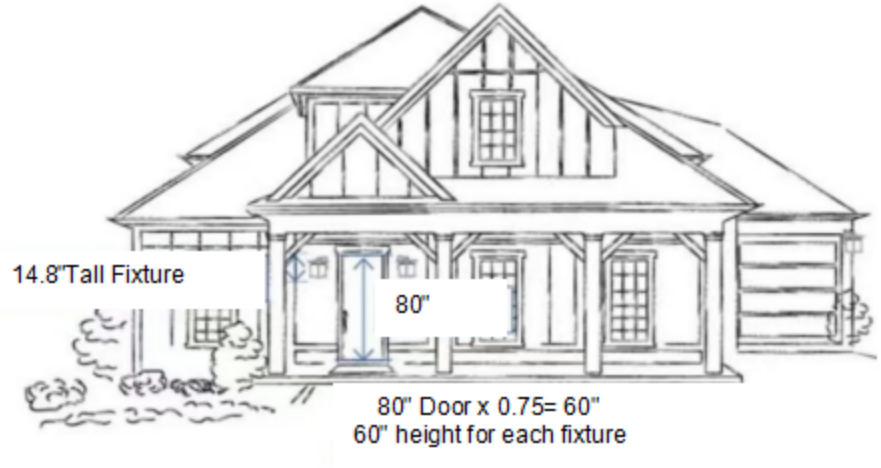

Where to Place Your Outdoor Wall Lights

If you have one light next to your entryway or garage door, then it should be 1/3 of the height of the door. If you will be placing one light on each side of the door, then the lights should be 1/4 of the height of the door. To do this, measure from the floor to the top of your door, then divide by 4 for two lights or 3 for one light. For example, if your door is 80" tall, divide by 4, and buy two lights that are each 20" tall. The lights should also be placed 66" from the floor or ground to properly illuminate the lock and handle. Lights should also be placed 6" from the edge of the door. If you choose to have only one light, make sure it is placed on the side of the door closest to the door handle.

Helpful Tip: This product is equipped with a dusk-to-dawn sensor. Please pay attention to the installation height to ensure that no objects such as eaves cover the sensor, as this may cause the light to remain on constantly.

1.Does it feature a dusk-to-dawn sensor?

Absolutely, it does! This sleek exterior light fixture boasts an intelligent dusk-to-dawn sensor that seamlessly transitions from off to on as nightfall approaches, automatically adjusting to ambient light levels below 20 LUX. And in the morning, when brightness exceeds 90 LUX, it turns off, saving you energy and eliminating the need for manual operation.

2.What could be the reason if the lamp does not turn on during installation?

If you find that the lamp remains off during installation, it's most likely due to the dusk-to-dawn sensor's natural deactivation during daylight hours. To verify the lamp's functionality, simply cover the sensor with your hand or a cloth after turning on the power switch. If the lamp illuminates, this confirms that the lamp is working as intended and the issue is related to the sensor's automatic day/night cycle.

3.What if I do not need the dusk-to-dawn functionality?

No worries! This fixture comes thoughtfully designed with a convenient rubber cap that allows you to easily disable the dusk-to-dawn feature. Simply slide the cap over the sensor whenever you prefer manual control over the lamp's operation.

4.What should I do if the glass lampshade I received is cracked or broken?

We understand that receiving a damaged product can be disappointing. If you find that your glass lampshade is cracked, broken, or otherwise not in perfect condition, please contact us immediately. Our customer service team is dedicated to providing you with the best possible solution and ensuring your satisfaction.

Assembly & Installation Instructions

Dear Customer :

Thank you for choosing us!

We appreciate your business. Should you have any questions or encounter any issues, please don't hesitate to contact us. You can reach us via email at support@4modernhome.com or by calling 469-312-6428.Our team is dedicated to ensuring your complete satisfaction with your purchase. We value your feedback, as it helps future customers in making informed decisions. We encourage you to share your experience by leaving a brief product review on the platform where you made the purchase. Once again, thank you for choosing us!

Best regards!

[Support Team]

Warning: If any special control devices are used with this fixture, follow the instructions carefully to assure full compliance with N.E.C.requirements. If there are any questions, contact a qualified electric contractor.

Warning: California Residents Proposition 65 This product contains lead, a chemical known to the state of California to cause cancer and birth defects or other reproductive harm. Do not place the product in your mouth. Wash your hands after handling this product.

Caution: It is highly recommended to get an electrician to install this light. Please make sure to turn the electricity off at the main circuit breaker before beginning installation. All glass is fragile.Use care when handling glass component(s)and/or lamp(s).

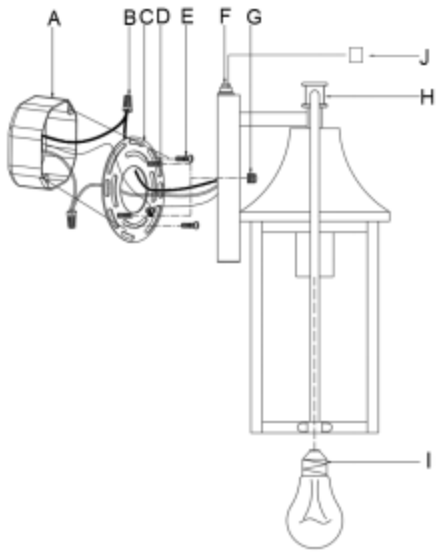

Applicable bulb type: A60、T45、ST64 ...

Helpful Tip: This product is equipped with a dusk-to-dawn sensor. Please pay attention to the installation height to ensure that no objects such as eaves cover the sensor, as this may cause the light to remain on constantly.

Drawin g 1

After securing fixture to the wall it is recommended that the gap between the wall and the fixture backplate be sealed on the top and both sides, with a good quality waterproof caulk or silicone sealant (NOT INCLUDED)-see Drawing 1.

WIRE CONNECTION DIAGRAM

Wires meeting safety standards are required to connect the electrical circuit.

CAUTION: Risk of fire

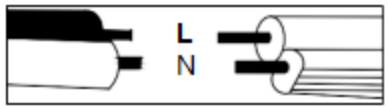

Please read all instructions carefully. Before you proceed to install, make sure that the power supply is turned off and remains off until installation is completed.

PARTS INCLUDED

Code	Part Description	QTY
A	Junction box	0
B	Wire caps	3
C	Mounting bracket	1
D	Studs	2
E	Mounting screws	2
F	Photoelectric switch	1
G	Nuts	2
H	Lamp cover	1
I	Light bulb	0
J	Light control caps	1

7009-1BK installation steps:

Step 1: Turn the nut G from the lamp body and remove the hanging plate C;
Step 2: Lock the hanging plate C on the junction box A with screw E;
Step 3: Use the terminal B to connect the lamp body black, white, ground line and the input line respectively;
Step 4: Use the nut to lock the lamp body on the hanging board C with the nut G;
Step 5: Transfer the bulb I knob to the lamp body;
Installation completed

Note: When the lamp does not need automatic sensing, cover this cap (J) on the light control
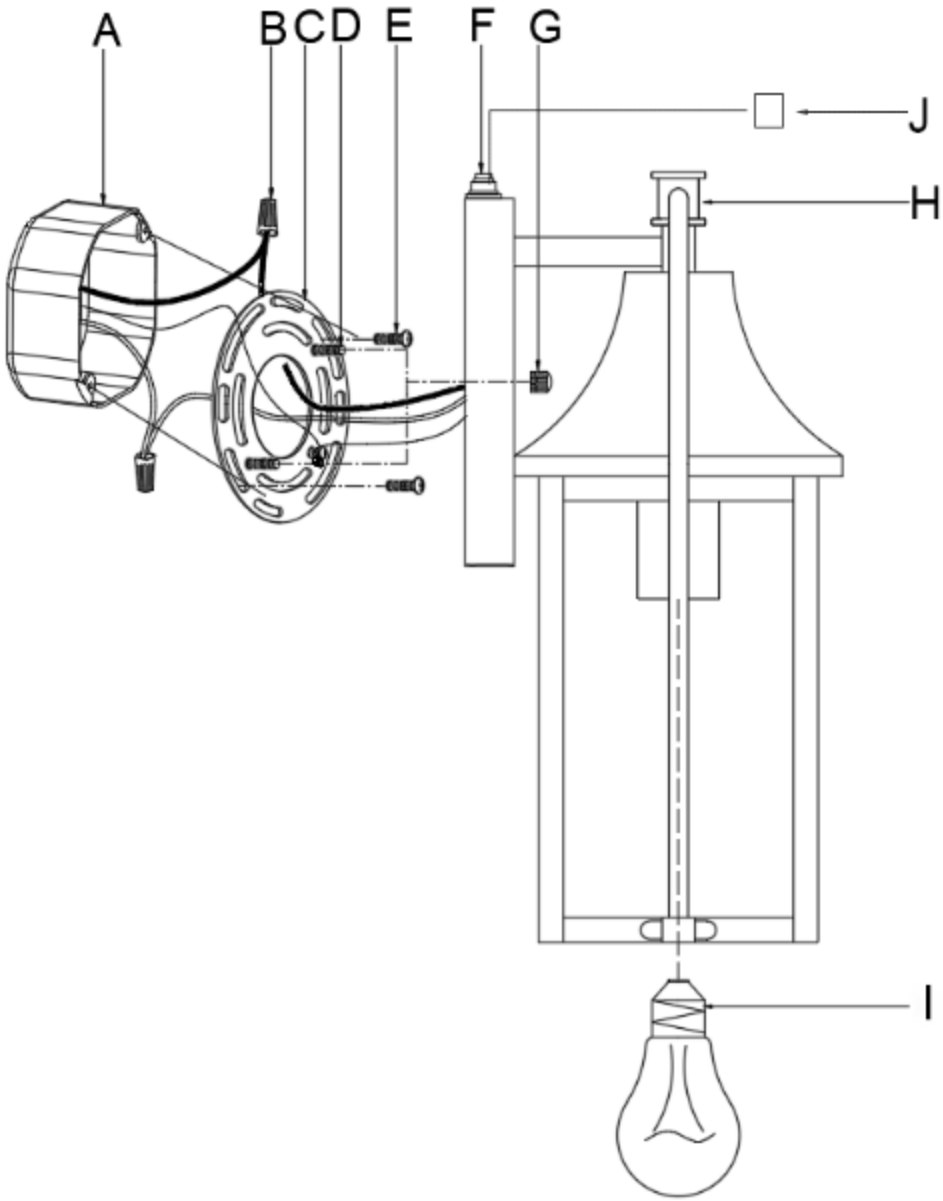
Tip: When installing the light during daytime, use the small black cap from the accessory kit to cover the sensor and test the wall light. Once the light is confirmed to be working, remove the cap to enable Dusk-to-Dawn mode. To switch to manual control the cap can remain in place.