GENERAC®

Parts Manual

Model G0089390, GP20,000E 49ST

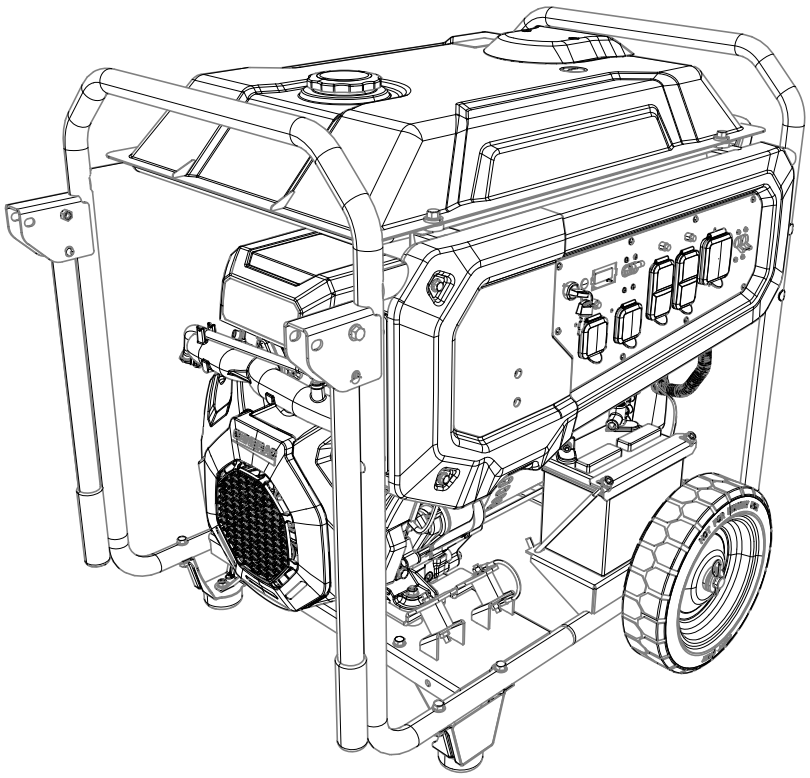

SAVE THIS MANUAL FOR FUTURE REFERENCE

Quick Reference Guide

Engine Size	Fuel	Engine Part No.
817 cc	Gaseous	A0012757038
Quick Reference Parts		
Description	**Part No.**	**Special Notes**
SPARK PLUG	A0003637864	
AIR FILTER	0J8478	

Table of Critical Torque Values

Item	Hardware	N-m [Lb-ft]
Terminal Block to Alt Wires	PZ2 (NOT STANDARD PHILIPS)	2.2 [1.6]
Rotor to Crankshaft	SCREW HHC 3/8-24 X 15.5	40.7 [30]
Stator to Engine	SCREW IHHC M8-1.25 X 400 G8.8	8-9.5 [6-7]
J Bolt to Battery Bracket	J-BOLT M8-1.25 X 200	6.7-9.5 [5-7]
Exhaust Manifold to Engine	SCREW SHC M8-1.25 X 20 C12.9	27.1 [20]
Exhaust Clamp	BOLT U 5/16-18 X 2.09	19-23 [14-17]
Iso Mount to Base Plate	VIB MNT 1.5 X 1.38 X 5/16-18	11.9 [8.75]
Iso Mount to Frame	VIB MNT 1.5 X 1.38 X 5/16-18	11.9 [8.75]
O2 Sensor to Manifold	M12 x 1.25 THREAD (14MM OR 9/16" WRENCH)	18 ± 1.5 [13.2± 1]
Heat Shield to Exhaust Manifold	SCREW HHFC M6-1.0 X 8 SERRATED	10 [7.7]
Base Plate to Engine Base	SCREW HHC M8-1.25 X 45 PC8.8	27.1 [20]
Control Panel to Side Panel	NUT HEX FLANGE M5-0.8 LOCK NYLON	2.2 [1.6]
Brush Pack to RBC	SCREW HHTT M5-0.8 X 16	2.7- 5.5 [2-4.1]
RBC Cover to RBC	SCREW HHTT M5-0.8 X 16	2.7- 5.5 [2-4.1]
Fuel Pump Cover to Bracket	SCREW BHSC M6-1.0 X 12 ZC BLACK	2.2 [1.6]
Terminal Block to Stator	M6-1.0 TAPTITE	4 [2.9]

This page intentionally left blank.

Table of Contents

GP20000 G0089390 UNIT 6

GP20000 G0089390 CONTROL PANEL 8

GP20000 G0089390 817 ENGINE 10

GP20000 G0089390 UNIT

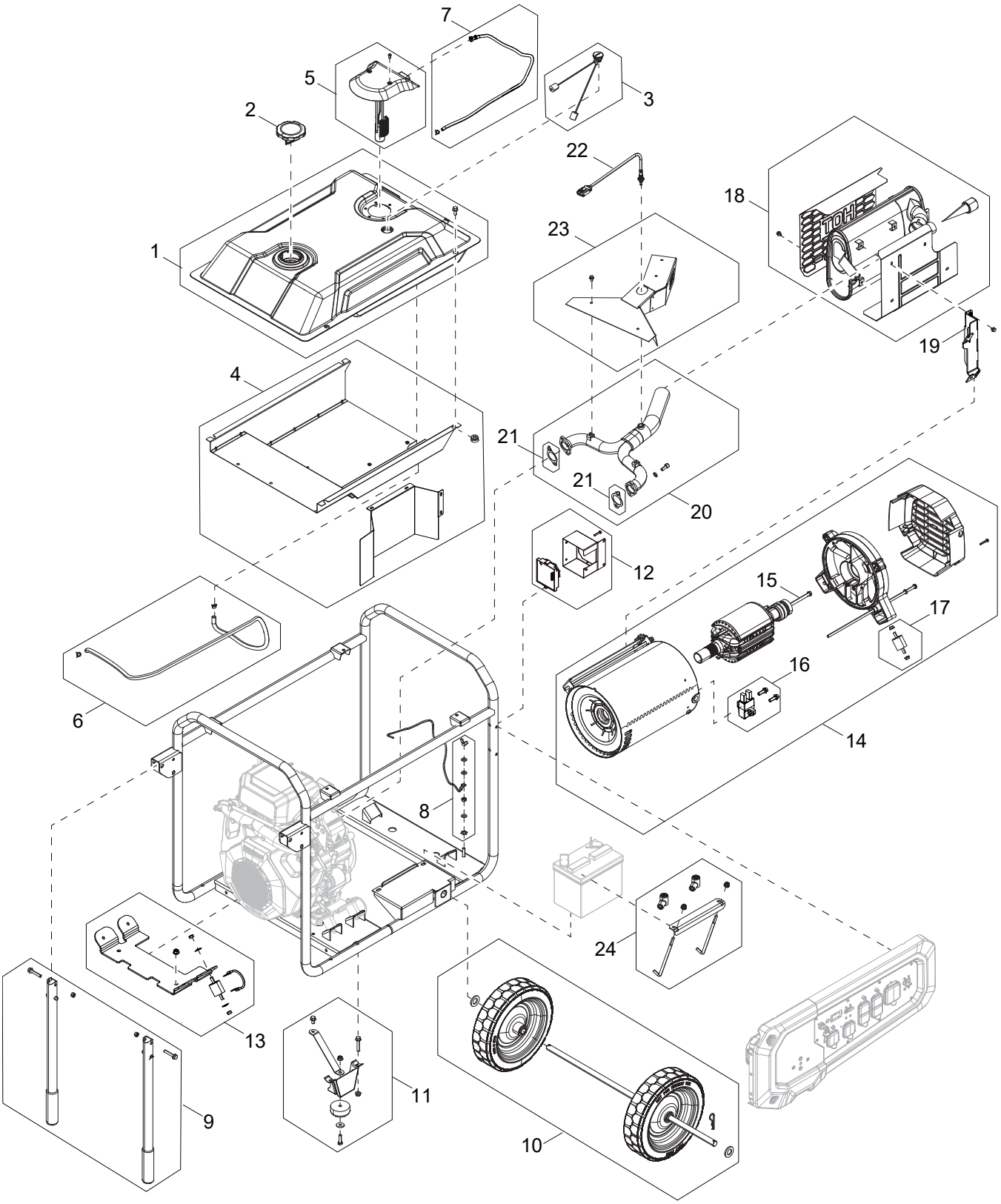

GP20000 G0089390 UNIT (continued)

Item	Part Number	Description	Qty.	Remarks
1	A0003330700	KIT-FUEL TANK ASSEMBLY	1	
2	0H0958A	ASSY GAS CAP SEALED - BLACK	1	
3	A0001077246	FUEL GAGE ROUND 187LG ARM	1	
4	A0011923390	KIT-TANK SHIELDS	1	
5	A0011923391	KIT-FUEL PUMP W/ COVER	1	
6	A0011923394	KIT-EVAP HOSE W/CLAMPS	1	
7	A0011923393	KIT-FUEL HOSE W/CLAMP	1	
8	A0003330009	KIT-GROUNDING WIRE TO FRAME	1	
9	A0003330316	KIT-HANDLE ASSEMBLY	1	
10	A0003330326	KIT-WHEEL ASSEMBLY	1	
11	A0003330321	KIT-FOOT BRACKETS	1	
12	A0011923395	KIT-PCB VOLTAGE REG W/MOUNT	1	
13	A0011923396	KIT-ENGINE MOUNT	1	
14	A0003346490	KIT-ALTERNATOR ASSEMBLY	1	
15	0D1838	SCREW IHHC 3/8-24 X 15.50	1	
16	A0011923397	KIT-ALTERNATOR BRUSH	1	
17	A0011923398	KIT-ALTERNATOR MOUNT	2	
18	A0011923399	KIT-MUFFLER	1	
19	A0011923400	KIT-MUFFLER SIDE MOUNT	1	
20	A0011923401	KIT-EXHAUST MANIFOLD	1	
21	0C4138	GASKET EXHAUST PORT	2	
22	A0002057615	SENSOR OXYGEN SWITCHING	1	
23	A0011923402	KIT-EXHAUST HEAT SHIELD	1	
24	A0003330686	KIT - BATTERY ASSEMBLY	1	

GP20000 G0089390 CONTROL PANEL

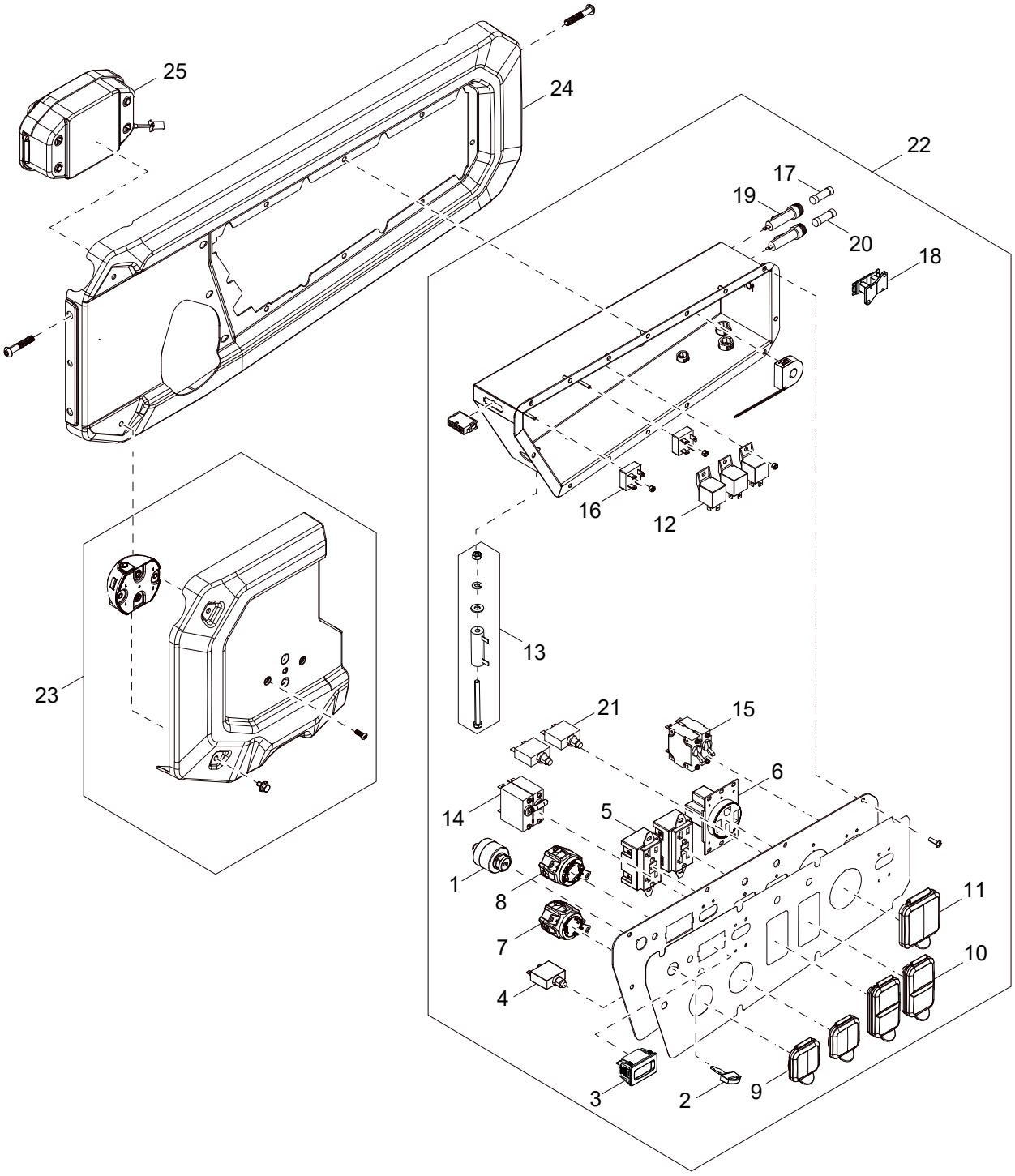

GP20000 G0089390 CONTROL PANEL (continued)

Item	Part Number	Description	Qty.	Remarks
1	A0000961590	SWITCH KEY ACTUATED START	1	
2	A0001177764	SWITCH KEY	1	
3	0G8321	HOUR METER W/ALERTS AC/DC	1	
4	0H0265E	CB 30A 1P CUL/CSA	1	
5	0D4966	OUTLET 20A 120V GFCI GF20BK	2	
6	0D4969	OUTLET 50A 125/250V 4W 1258	1	
7	G068868	OUTLET 30A 120V RECEPT	1	
8	0G8758	OUTLET 30A 120/250V SPCGR	1	
9	0G9391	COVER 30A 120/240V	2	
10	0G9392	COVER 20A 120V GFCI/DUPLEX	2	
11	0H3814	COVER 50A 120/240V	1	
12	G052844	RELAY PNL 12VDC SPDT 30A	3	
13	G057405	RES 25R 5% 25W	1	
14	0G9023C	CB 0030A 2P 240V C AA2 QT	1	
15	A0002423697	CB 0050A 2P 240V	1	
16	A0001198884	DIO BRIDGE RECT 25A 1000V KBPC	2	
17	G022676	FUSE 15A X AGC15	1	
18	0D4804B	XFMR IDLE CURRENT	1	
19	G032300	HOLDER FUSE	2	
20	G028578	FUSE 10A X AGC10-R	1	
21	G075207	CB 0020A 1P UL/CSA SANG MAO	2	
22	A0012774382	SERVICE CONTROL PNL ASSY GP20 W/ DECAL	1	
23	A0011923409	KIT-CO MODULE GP20KW	1	
24	A0011923403	KIT-FRONT CONTROL PANEL	1	
25	A0011923404	KIT-ENGINE CONTROL MOD	1	

GP20000 G0089390 817 ENGINE

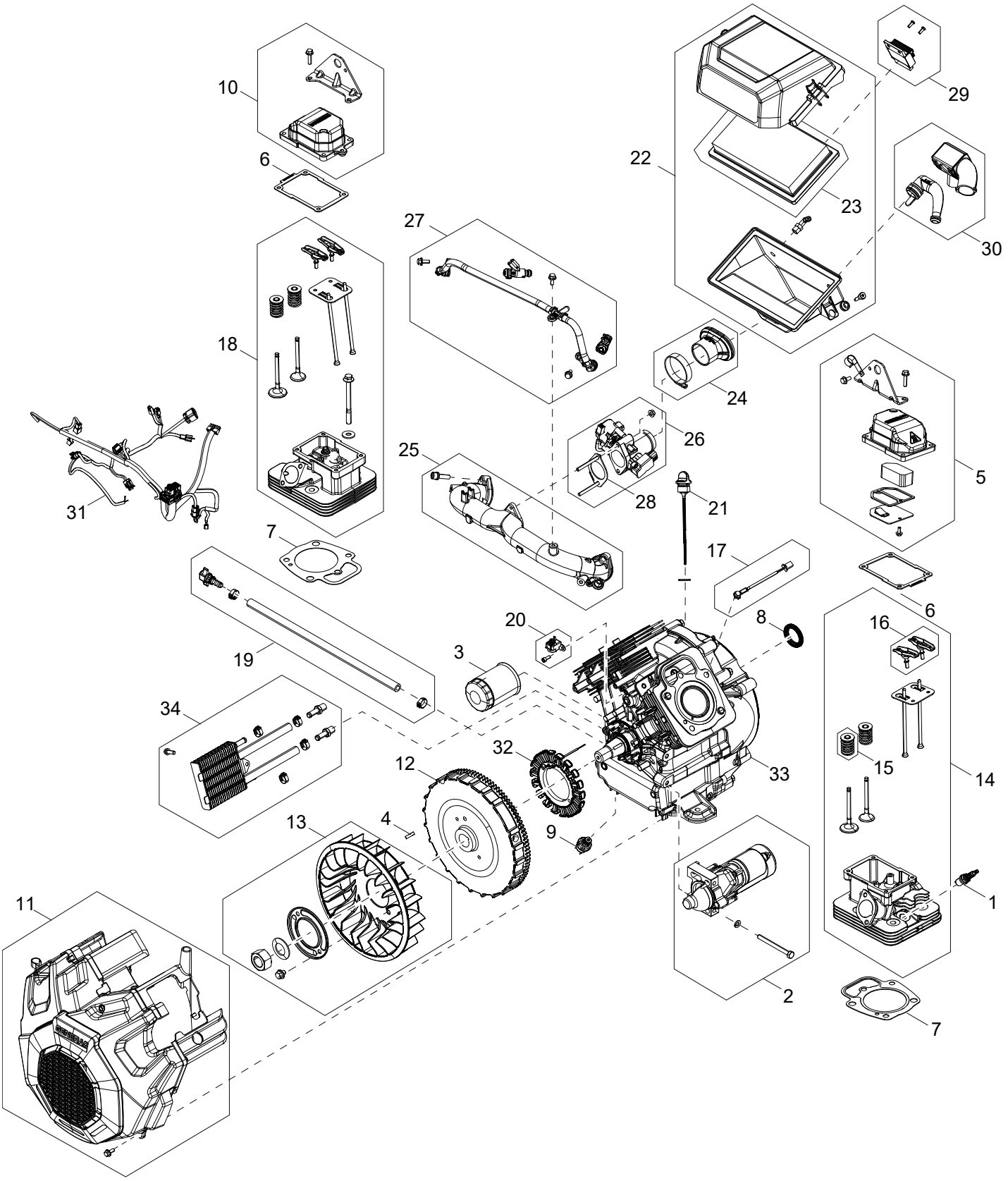

GP20000 G0089390 817 ENGINE (continued)

Item	Part Number	Description	Qty.	Remarks
1	A0003637864	SPARK PLUG GENERAC GAP: 0.020"	2	
2	A0007675010	KIT-STARTER MOTOR	1	
3	070185E	OIL FILTER 90 LOGO ORNG-CAN	1	
4	10000022810	KEY WOODRUFF 5 X 22	1	
5	10000014960	ROCKER COVER 85MM GPB W/BREATHER MCHND	1	
6	10000014927	GASKET ROCKER COVER 85MM	2	
7	10000033011	GASKET HEAD 85MM	2	
8	0E3812	SEAL D 35 X 48.2 VITON	2	
9	0L2917D	LOW OIL PRES SWITCH 10 PSI NO	1	
10	10000034577	ROCKER COVER 85MM GPB NO BREATHER MCHND	1	
11	A0012149501	KIT-FRONT COVER GH817 W/COOLER	1	
12	10000022639	FLYWHEEL/RING GEAR 255MM FOR EFI	1	
13	A0007676172	KIT-FAN	1	
14	A0007674976	KIT-CYLINDER HEAD #1 817	1	
15	A0008095272	KIT-SPRING REPLACEMENT	1	
16	A0008095580	KIT-ROCKER ARM AND STUD	1	
17	A0007676180	KIT-HEAD TEMP SENSOR	1	
18	A0007674967	KIT-CYLINDER HEAD #2 817	1	
19	A0007676175	KIT-OIL DRAIN ASSY	1	
20	A0007674963	KIT-CRANK POSITION SENSOR 817	1	
21	10000009751	CAP OIL FILL ASSY M30	1	Includes O-Ring
22	A0011923407	KIT-AIR BOX EFI	1	
23	0J8478	FILTER AIR ELEMENT 236X139X37	1	
24	A0011923408	KIT-INTAKE BOOT EFI	1	
25	A0011923410	KIT-INTAKE MANIFOLD EFI	1	
26	A0011923411	KIT-THROTTLE BODY EFI	1	
27	A0011923412	KIT-FUEL RAIL EFI	1	
28	A0011923413	KIT-GASKET INTAKE	1	
29	A0011923414	KIT-REGULATOR EFI	1	
30	A0011923415	KIT-BREATHER HOSE EFI	1	
31	A0000511607	HARN ENG 816CC EFI G26	1	
32	A0000562053	STATOR-SINGLE PHASE DIA 138 OD	1	
33	A0012757038	KIT-ENGINE REPLACEMENT 20KW	1	
34	A0011923406	KIT-ENGINE OIL COOLER	1	

Part No. A0012681603 Rev. A (Initial Release) 08/12/2026
© 2026 Generac Power Systems, Inc.
All rights reserved.
Specifications are subject to change without notice.
No reproduction allowed in any form without prior written
consent from Generac Power Systems, Inc.

Generac Power Systems, Inc.
S45 W29290 Hwy. 59
Waukesha, WI 53189
1–888–GENERAC (1–888–436–3722)
www.generac.com