TILE REDI® REDI TRENCH®

DOUBLE CURB SHOWER PAN

MODEL RT3060LDR-PVC-TBN

(Not to scale)

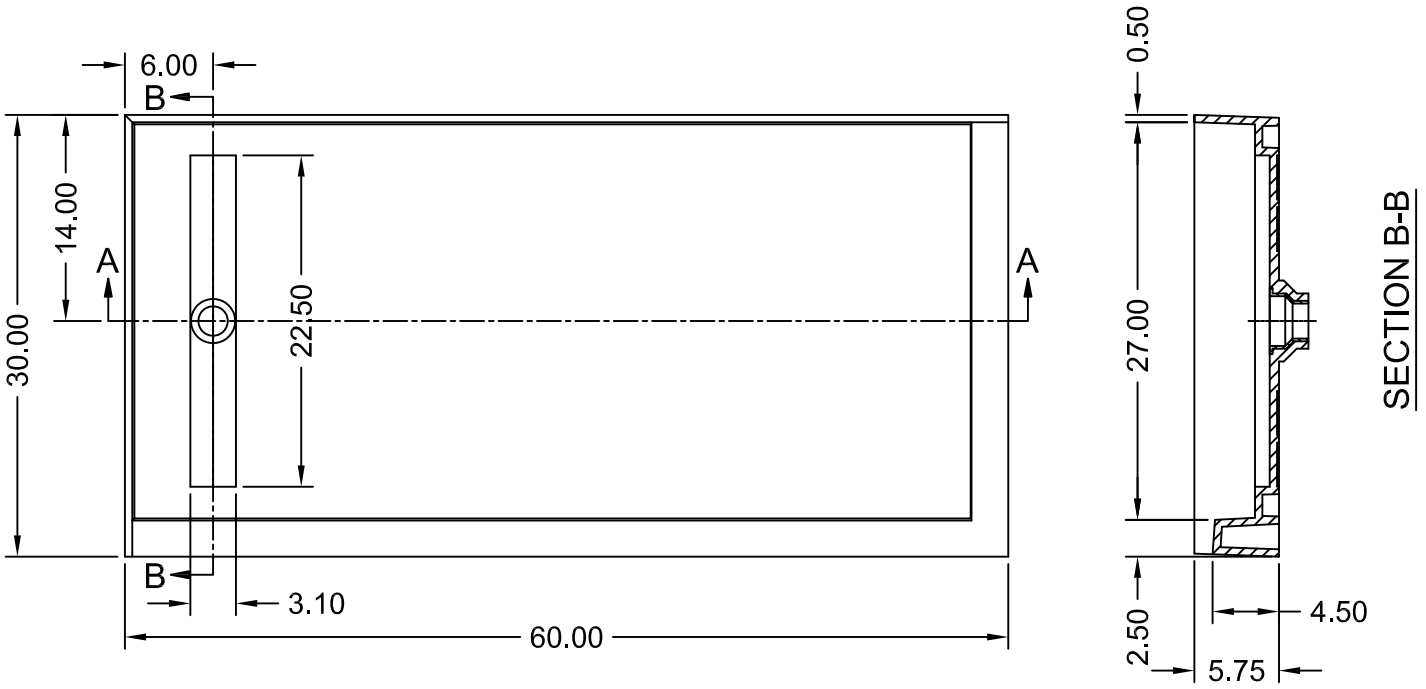

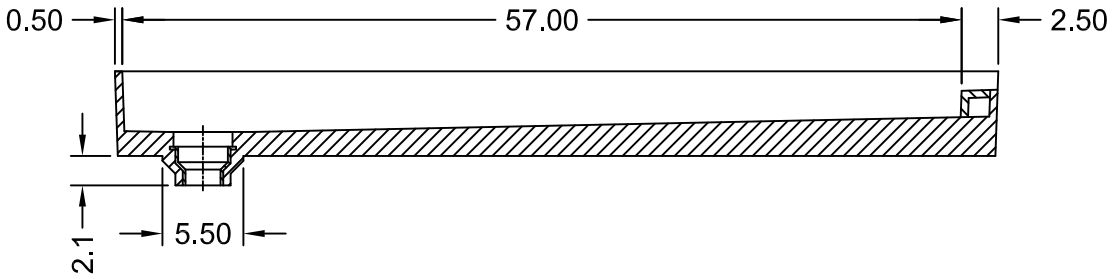

SECTION A-A

ANSI Z124.1-95
ANSI Z124.2-95
ICC/ANSI A117.1.98
ASTM F462-79
B45.0-02
B45.5-02

Toll Free 800.232.6156
Tel: 954.323.0125
Fax: 954.344.8064
techsupport@tileredi.com
www.tileredi.com

tile redi® Perfection through Innovation

2014.04.25

© 2014 TILE REDI USA, LLC