ASSEMBLY INSTRUCTION

① ×1	② ×2
③ ×1	
Ⓐ ×1	Ⓑ X12
Ⓒ X12	Ⓓ X12

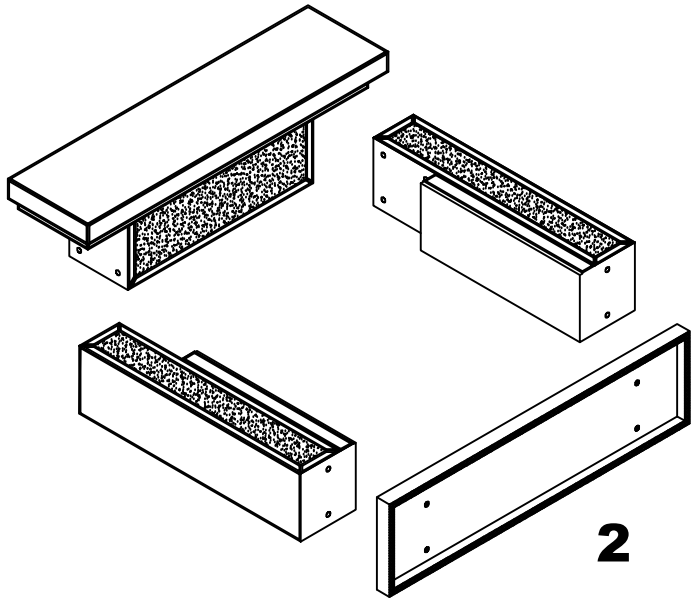

2

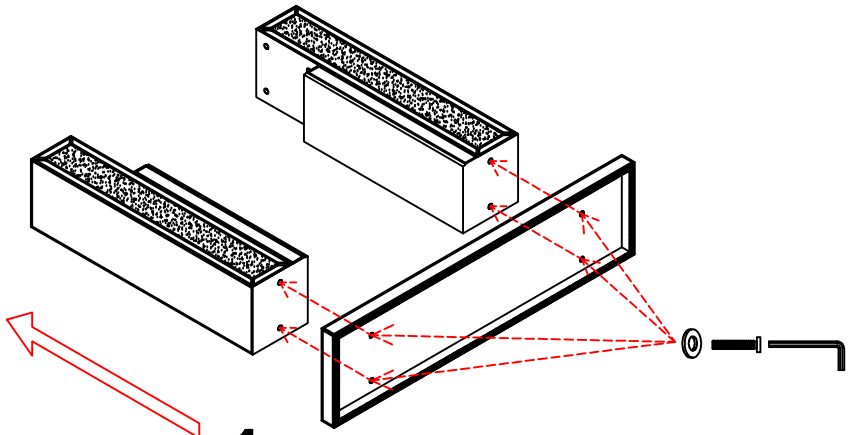

1

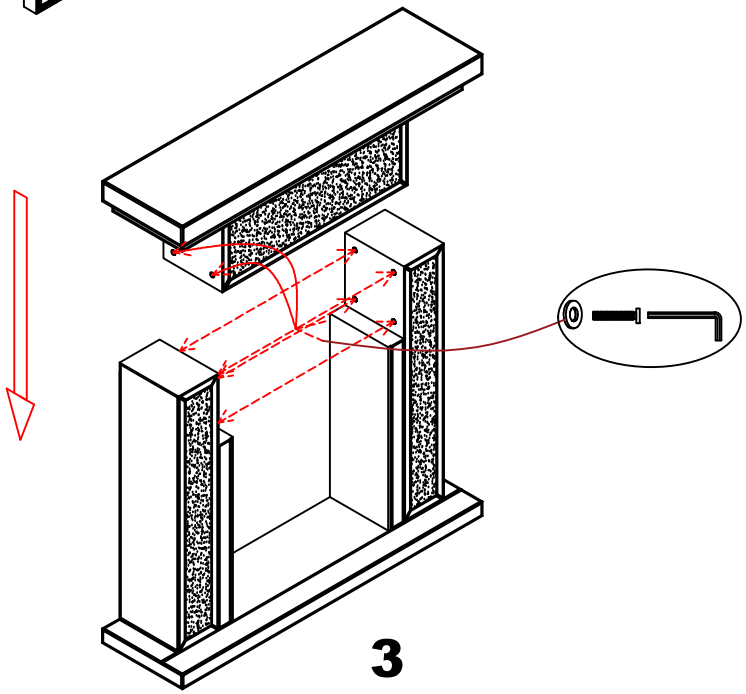
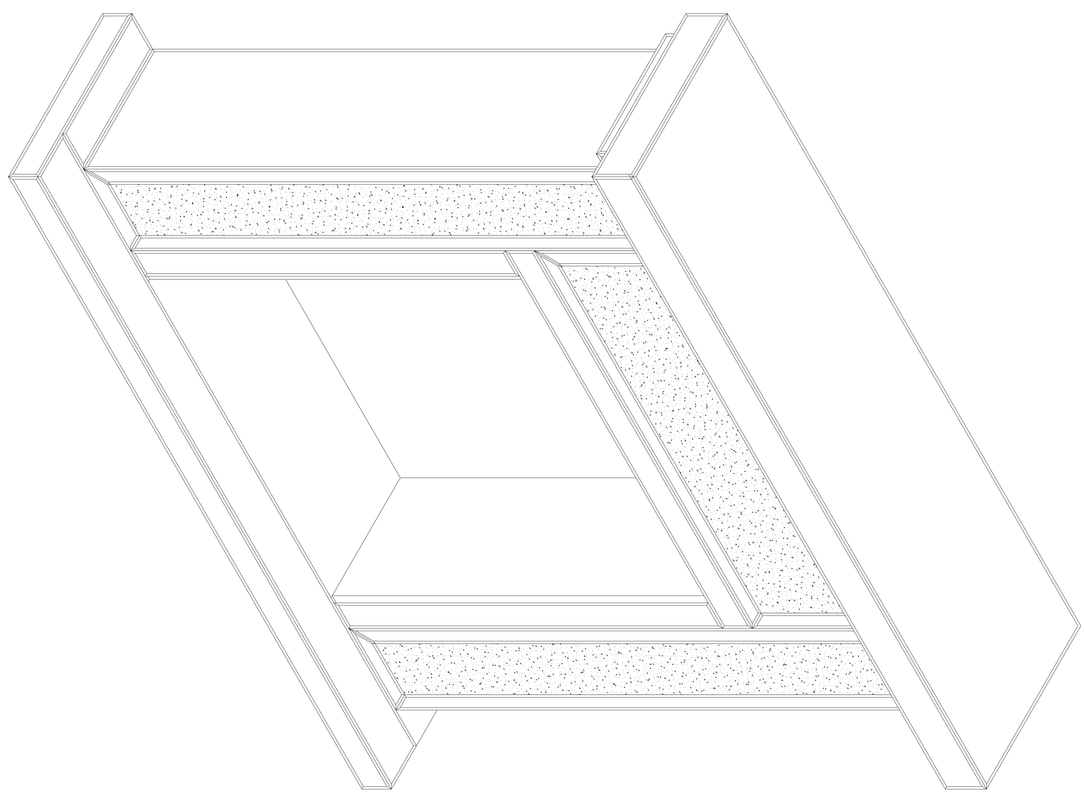
3