USER MANUAL

Please read and understand this manual before any assembly or installation, compare the details with the product display presentation, and ensure that all parts are in place.

If you have any questions, please feel free to contact us.

Package contents

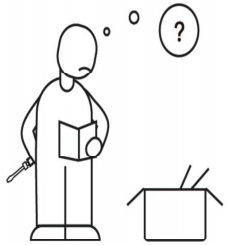

Check the package and prepare a ladder

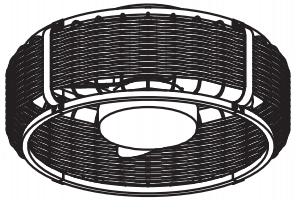

Ceiling fan with lights



Remote * 1
Wall bracket * 1
Accessory pack *1



Accessory pack *1

Before installation

Do this first!

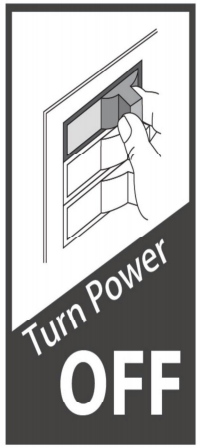

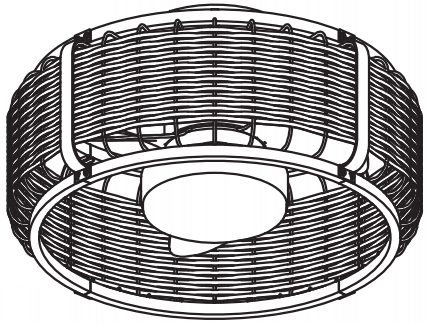

Installation

① 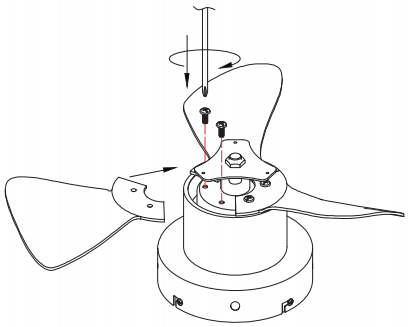

Secure the fan blades to the motor using screws

② 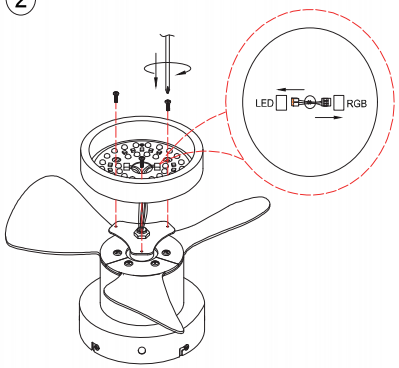

Fix the lamp panel onto the triangle with screws, and connect the wires to the lamp panel as shown in the diagram

③ 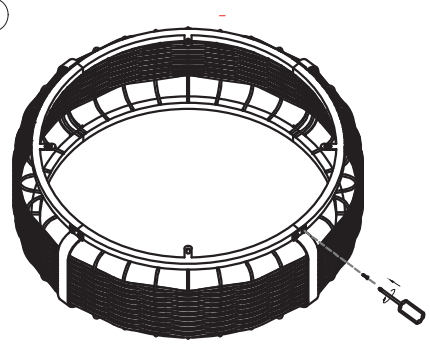

Fix the combination lampshade onto the connecting piece with screws

④ 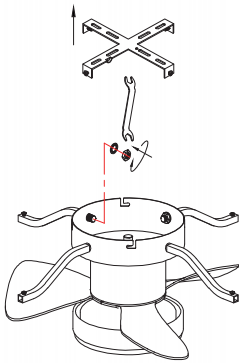

Remove the hanging board and use a wrench tool to fix the support rod on the lamp body

⑤ 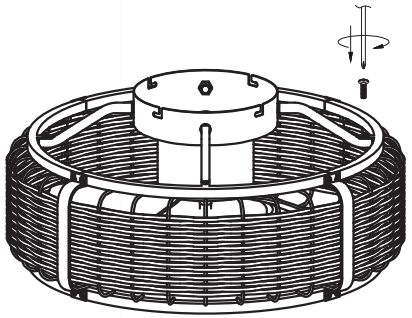

Fix the lampshade and lamp body together with screws

⑥ 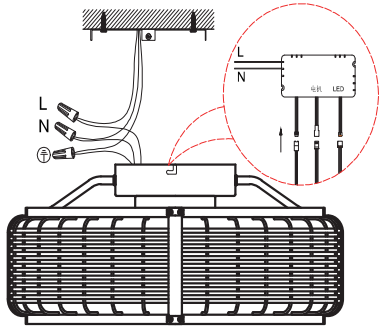

Connect the wires together as shown in the diagram

⑦ 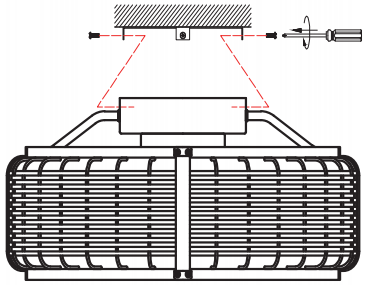

Screw the lamp body into the mounting bracket and secure it with screws

⑧ 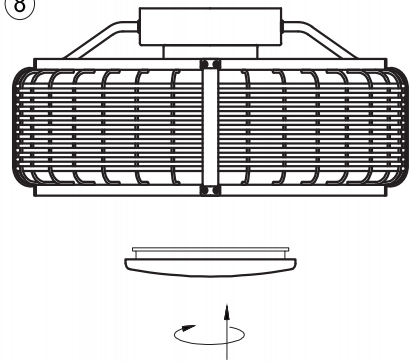

Screw the lampshade into the lamp disc and secure it in place

⑨ 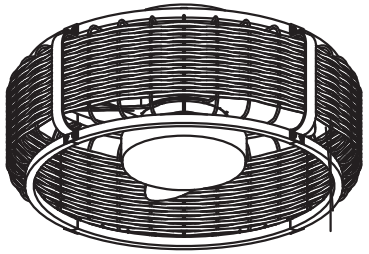

Turn on the power to test the lighting fixtures

Remote Operation



Scan the QR code to download the "Fanlamp Pro" APP (Or download from the app store).



Need 2*AAA batteries

- Pair Code: Turn on the wall switch, and you will hear a beep sound. Within 2 minutes, press the "FAN" button until you hear two beeps, indicating successful pairing between the fan and the remote. If it fails, turn off the wall switch, wait for 1 minute, and repeat the process.
- Attention: The remote has been pre-programmed before leaving the factory, so after installing the fan light, you can directly use the remote to operate it. The code pairing is only necessary if the remote is installed with batteries but cannot control the fan light properly.

Security and Maintenance

- Before installing, maintaining or cleaning the unit, make sure that the circuit breaker box is turned off or the main fuse is removed to ensure safety.
- Make sure all electrical connections comply with codes. If you do not have adequate electrical knowledge or experience, please seek a qualified licensed electrician.
- Mount to the outlet box marked acceptable for fan supported. The box must be supported directly by the building structure. The stability of the outlet box is essential to reduce fan noise and wobble.
- All set screws must be carefully checked, and re-tightened where necessary, before and during installation.
- After making electrical connections, turn the connected wires upward and carefully push them up into the socket box. The wires should be spread apart with the grounded conductor on the outlet box.
- Indoor use only. Do not use the fan in a specific like high temperature/radiation/ lampblack, damp or other abnormal environment.
- Do not insert foreign objects between rotating fan blades.
- Children should be supervised to ensure that they do not use appliances as a toy.
- At least twice each year, lower the canopy to check assembly and tighten all screws on the fan.
- Use a soft clean dry dust cloth or lightly dampened cloth to clean.

Please Scan the QR code to watch the installation video. If you have any questions, please feel free to contact us through the order interface.