Sofa-Montageanleitung

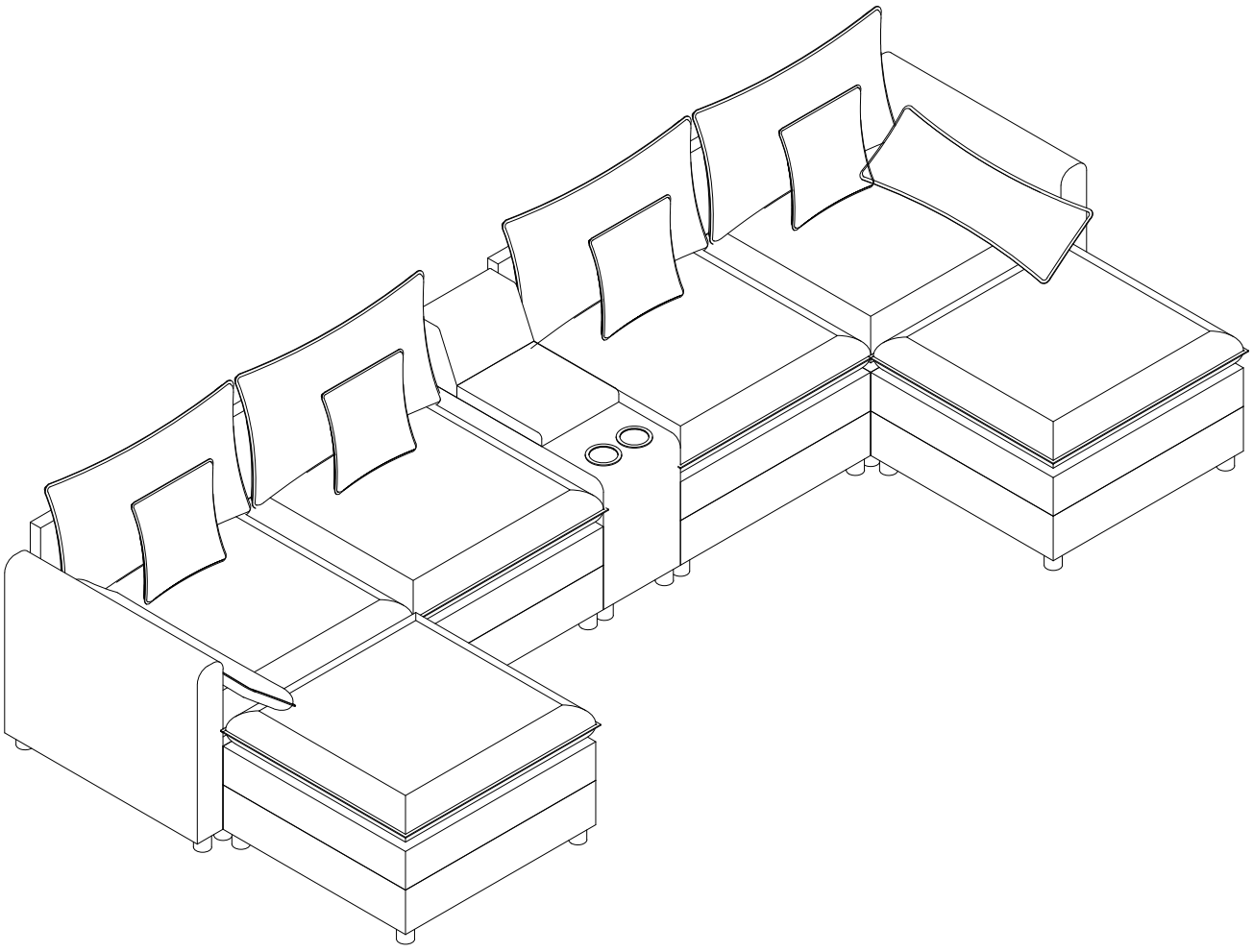

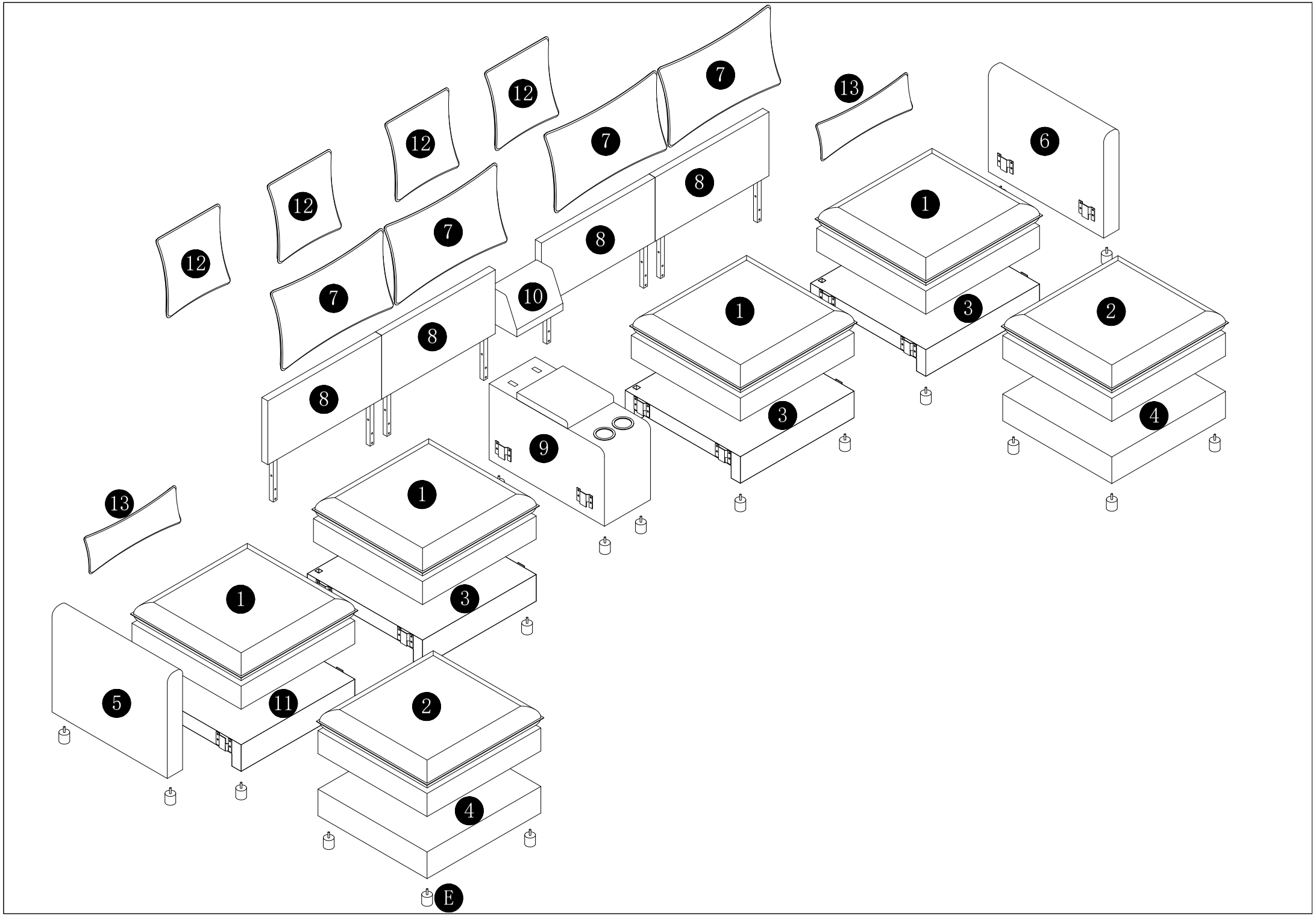
12
12
12
12
7
7
7
7
8
8
8
8
10
13
6
1
1
1
1
3
3
3
3
2
2
4
4
9
13
5
11
E

Part List

W3276P337809

(2) x 2

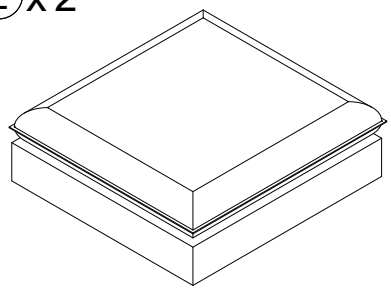

(4) x 2

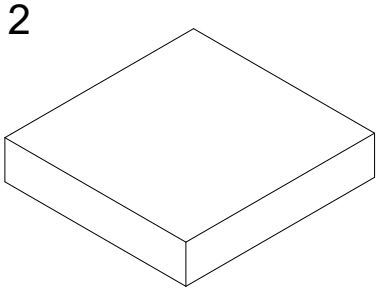

W3276P337808

(9) x 1

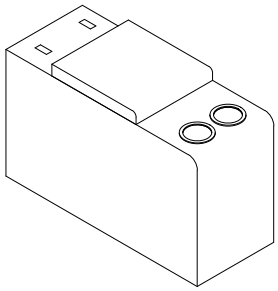

(10) x 1

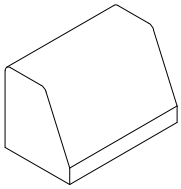

(12) x 4

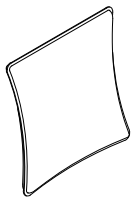

W3276P337806

(1) x 2

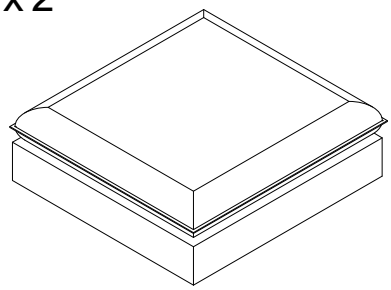

(3) x 2

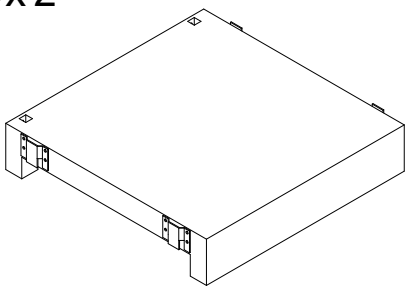

(5) x 1

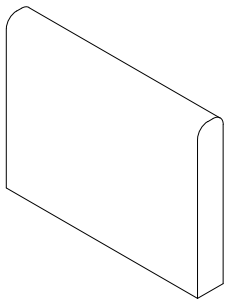

(7) x 2

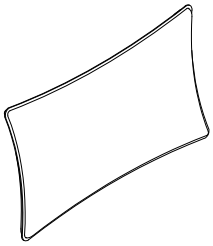

(8) x 2

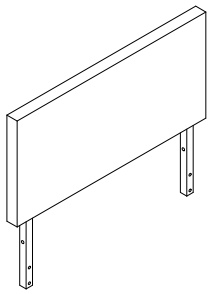

(13) x 1

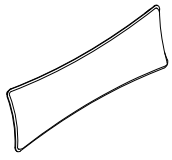

W3276P337807

(1) x 2

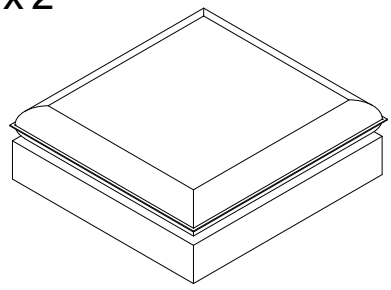

(3) x 1

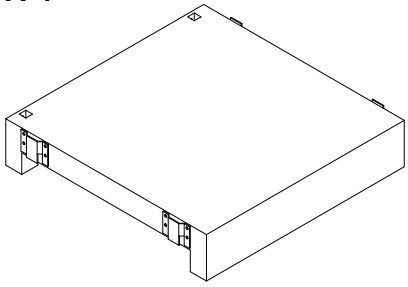

(6) x 1

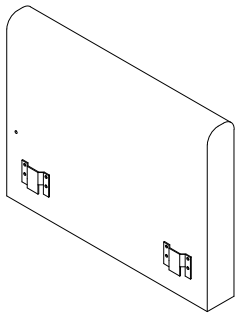

Part List

W3276P337807

7 x 2 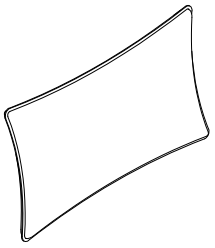	8 x 2 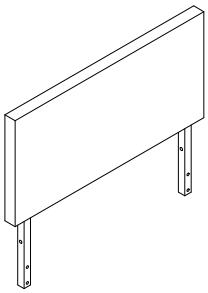	13 x 1 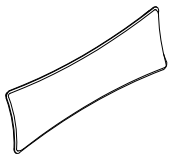
11 x 1 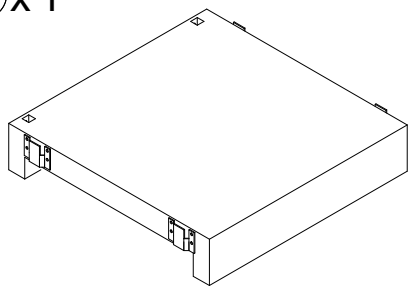		

Hardware

W3276P337808

A x 16 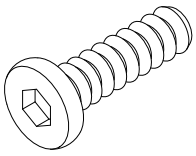 M8*25mm	B x 4 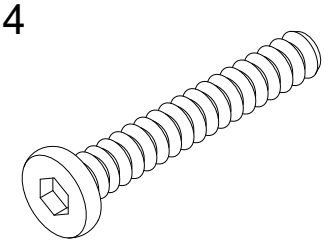 M8*75mm	C x 1 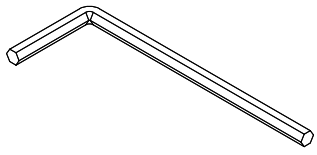 M5
D x 2 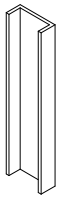	E x 28 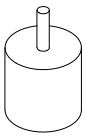	

Step 1:

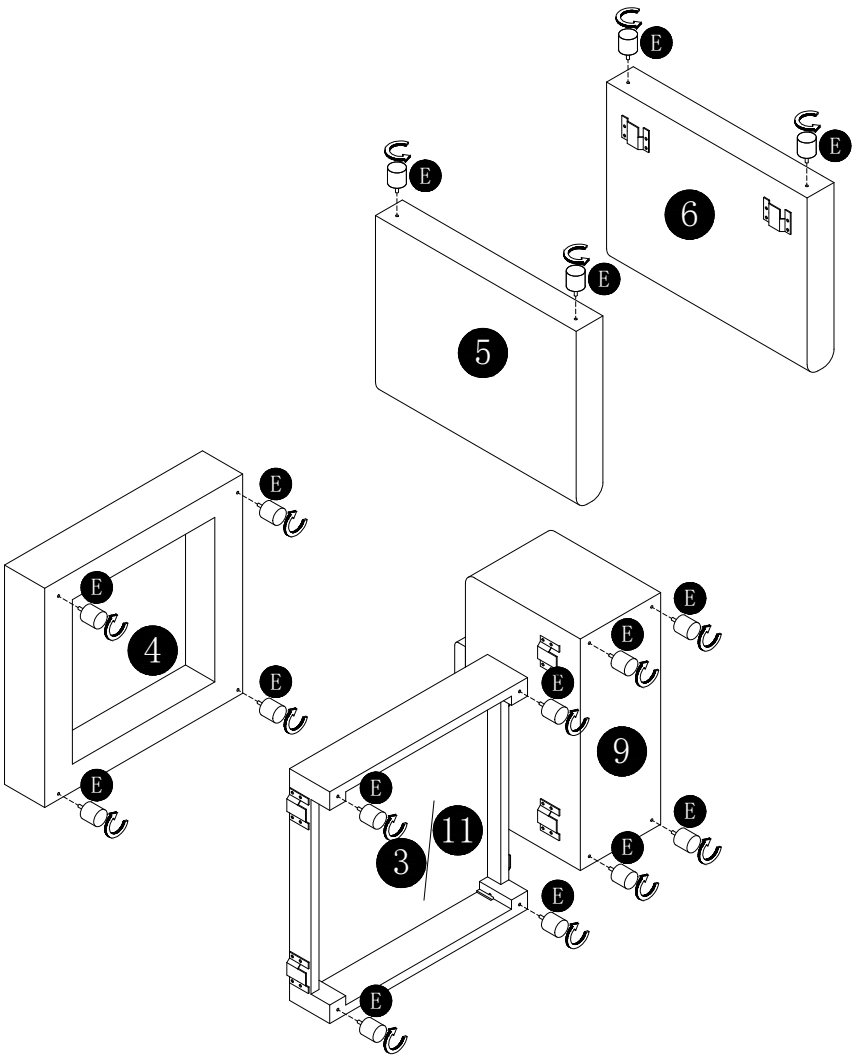

E		28pcs

Step 2:

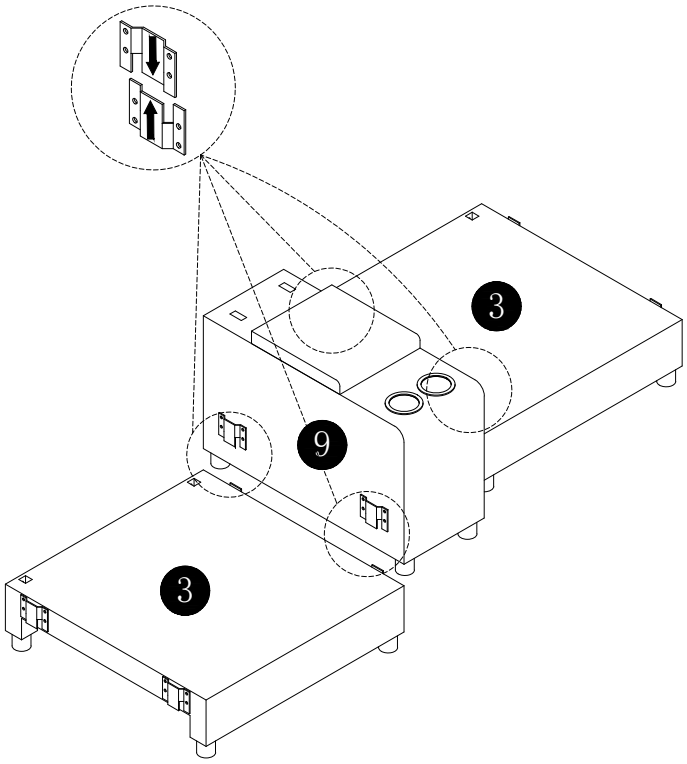

Step 3:

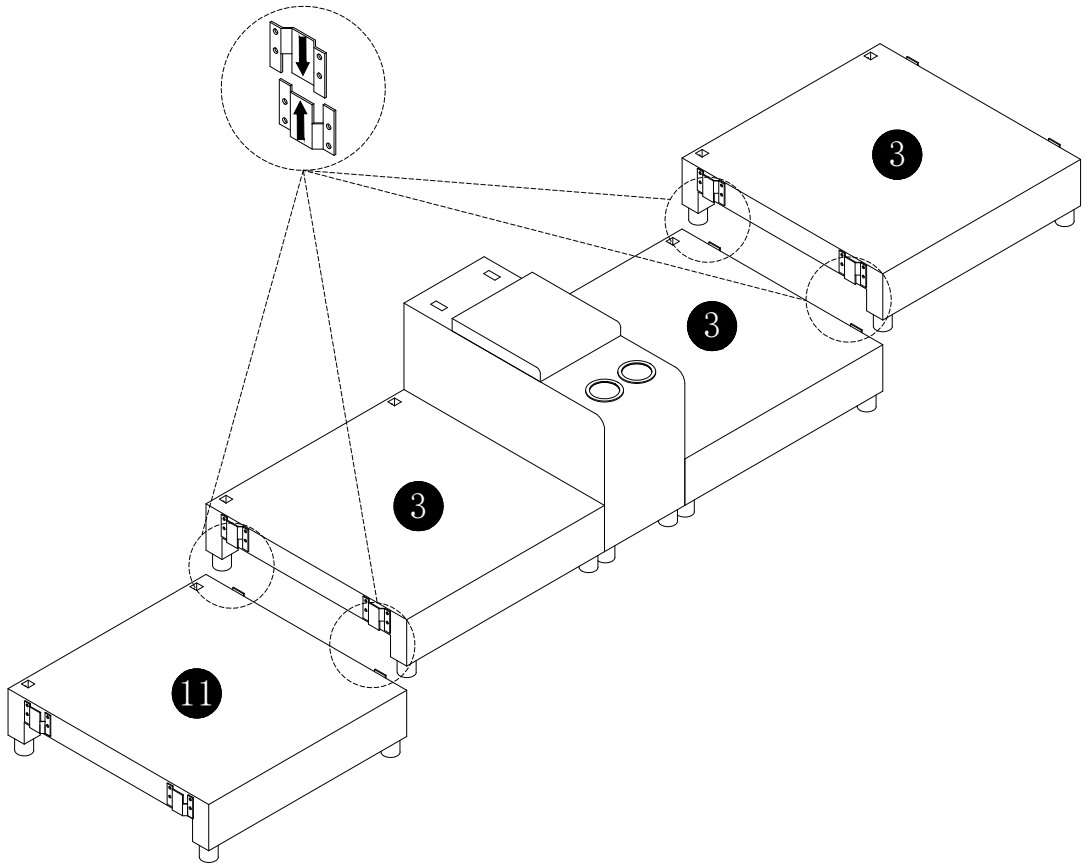

Step 4:

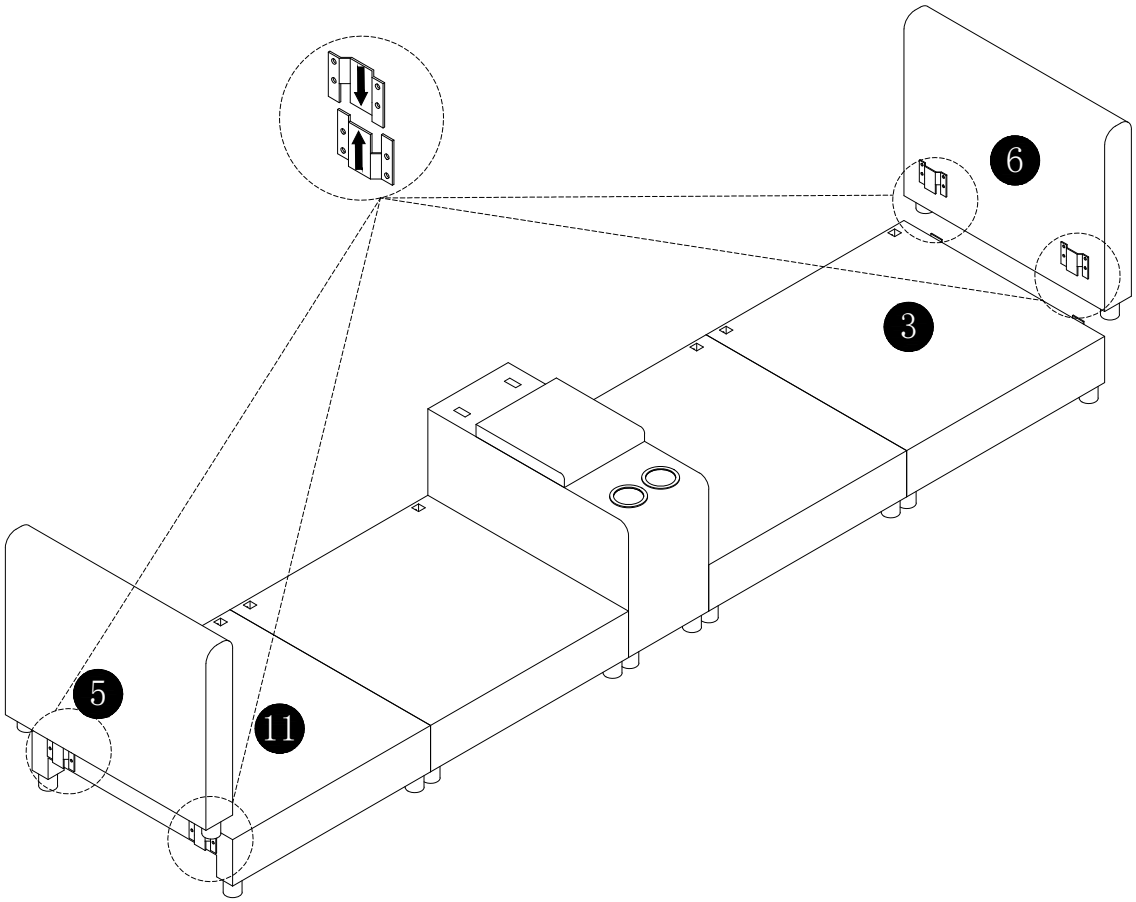

Step 5:

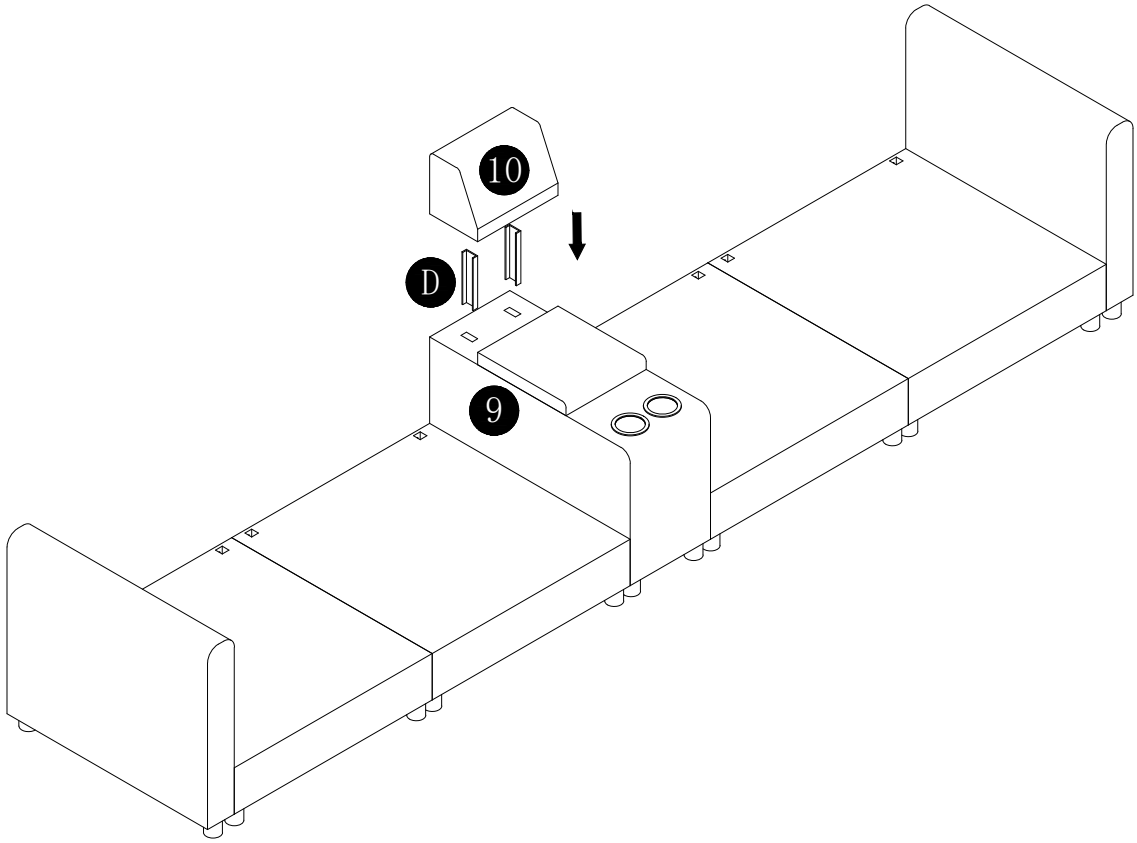

D		1pc

Step 6:

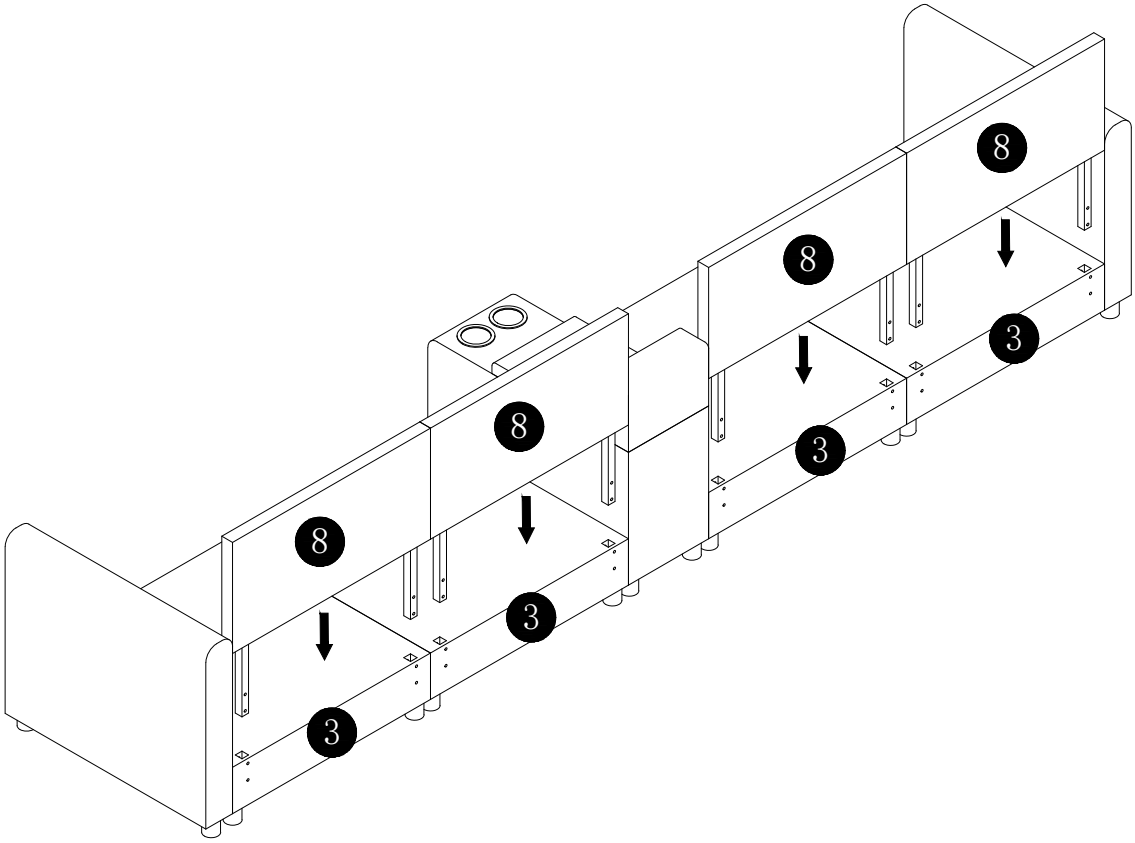

Step 7:

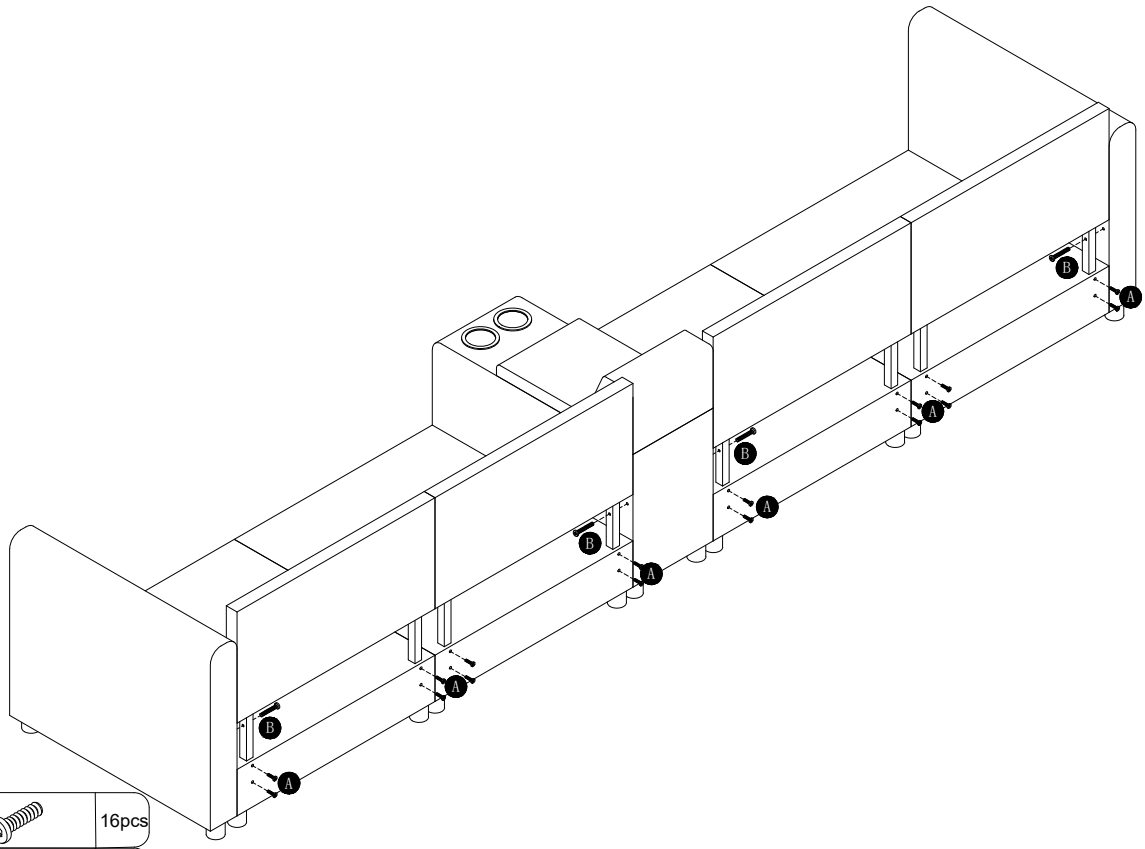

A		16pcs
B		4pcs
C		1pc

Step 8:

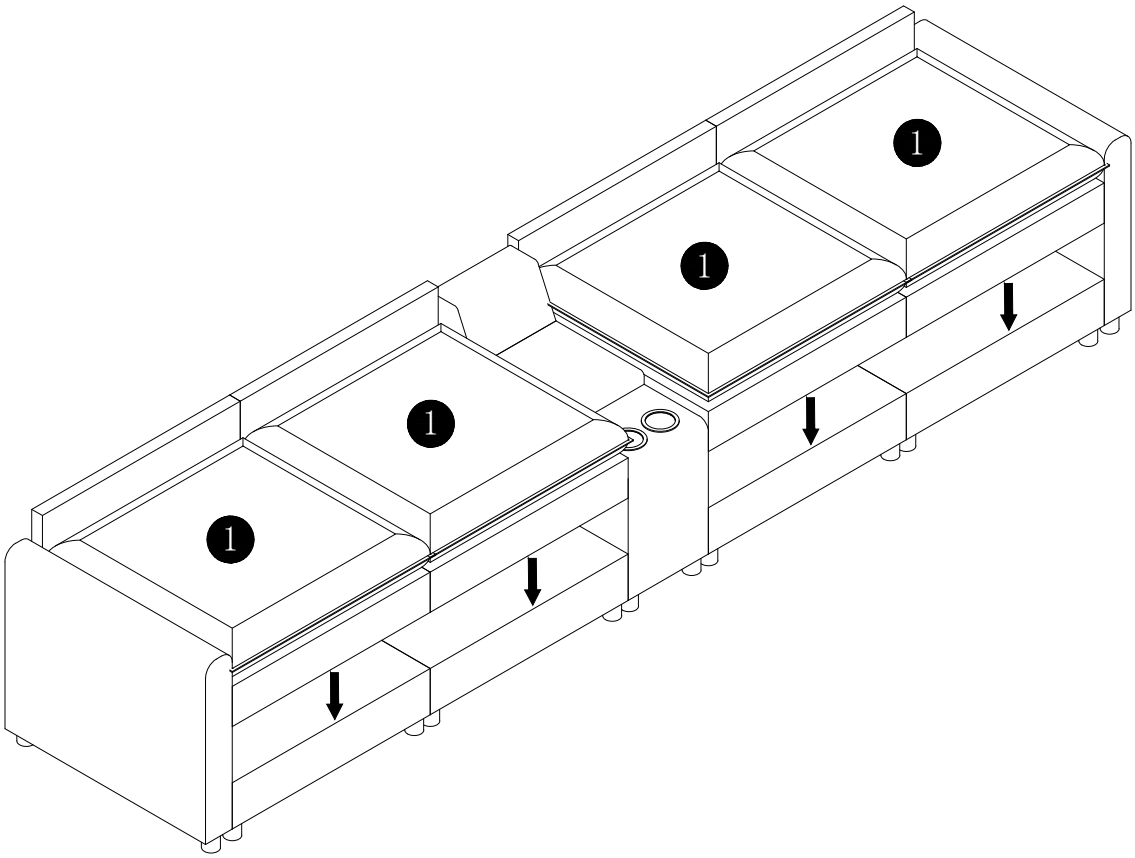

Step 9:

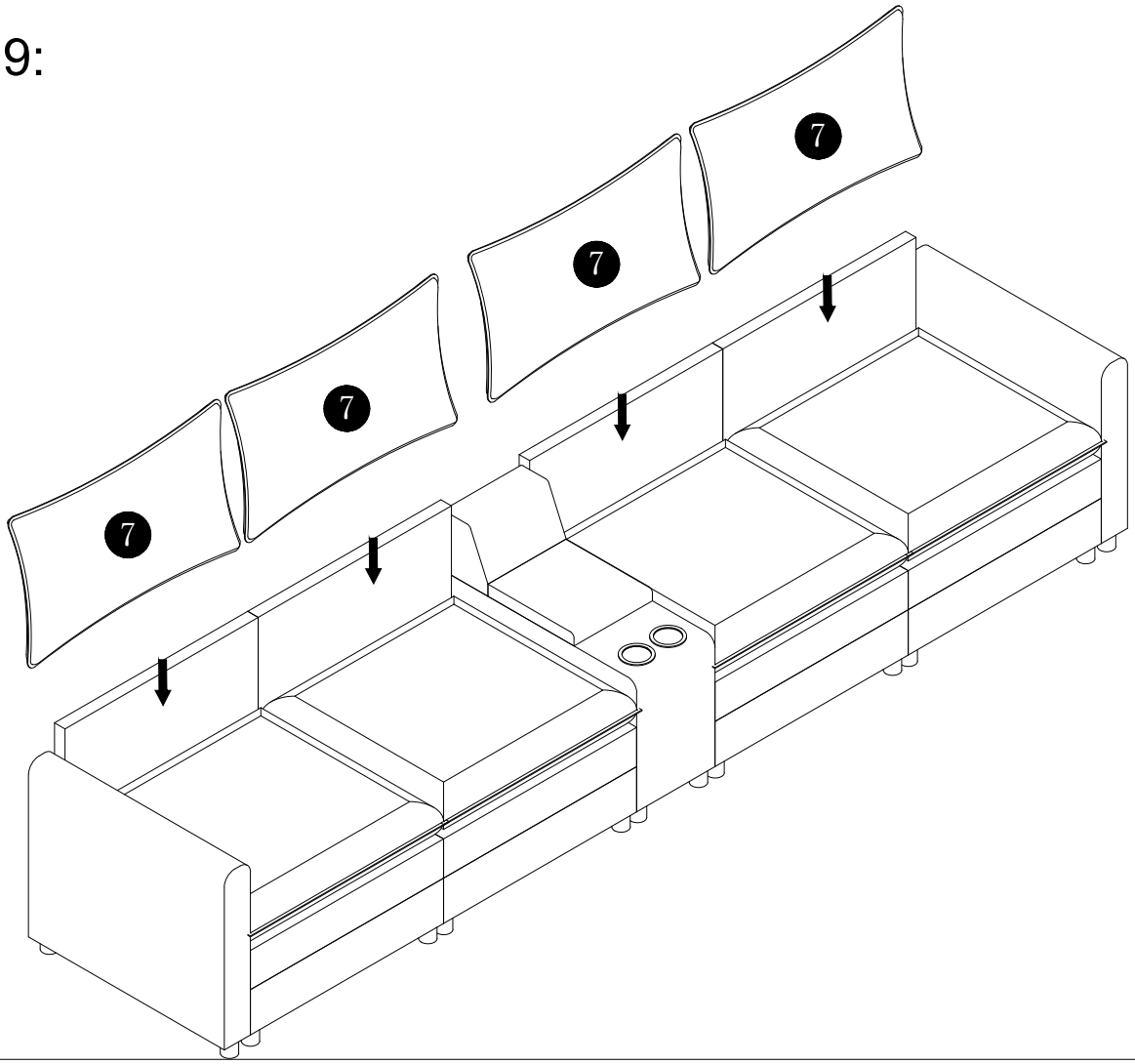

Step 10:

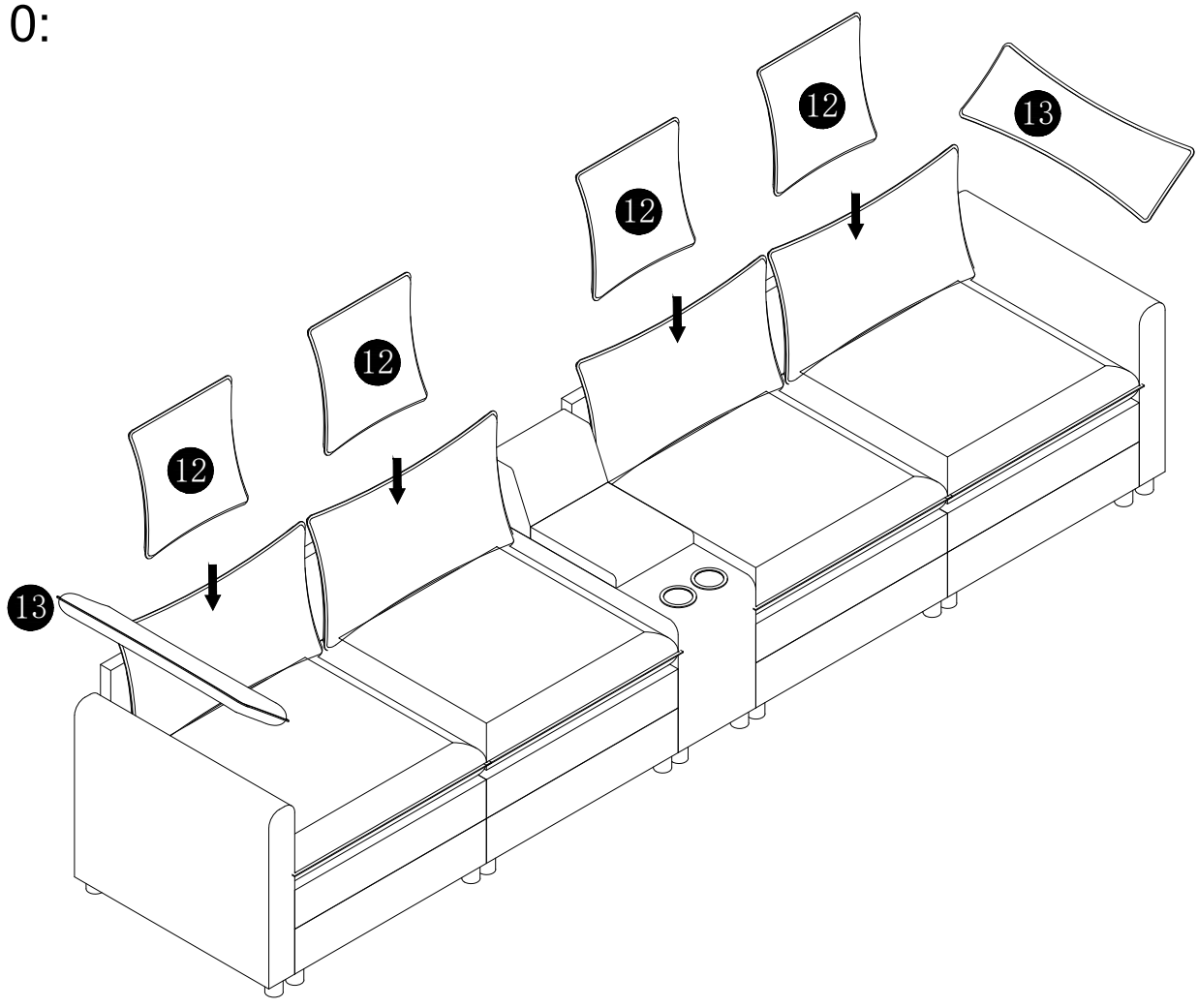

Step 11:

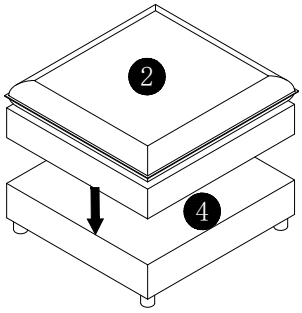

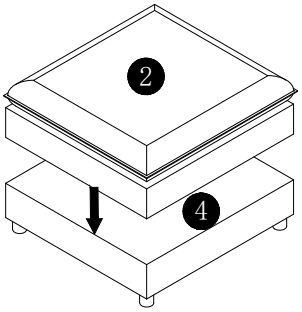

Step 12:

