
9.1 inch
230 mm
VEVOR
3.9 inch / 100 mm
238 inch / 605 mm

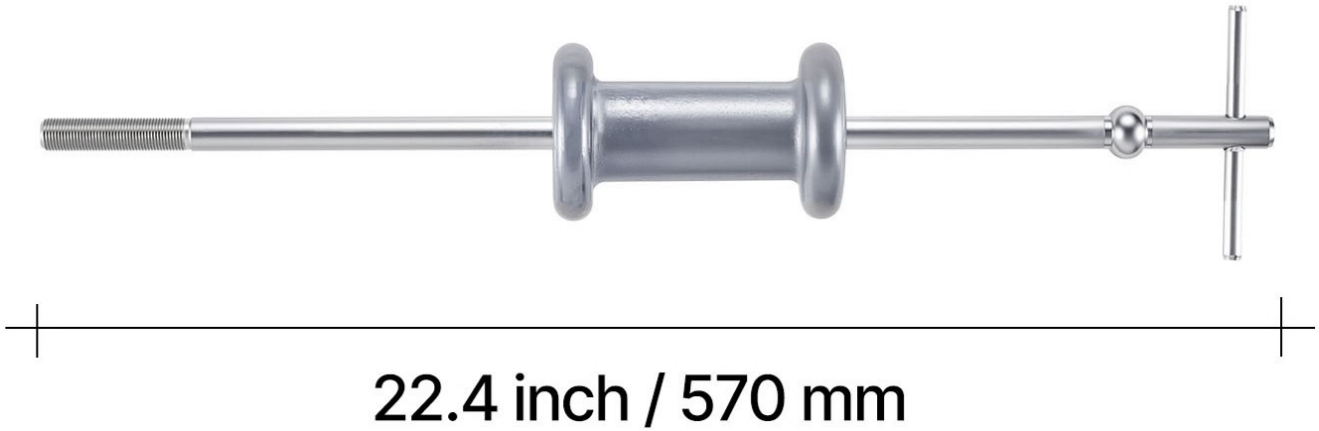
22.4 inch / 570 mm