DESIGNHOUSE

AUBREY WALL MOUNT LIGHTING FIXTURES
ASSEMBLY/INSTALLATION INSTRUCTIONS

Please read carefully and save these instructions, as you may need them at a later date.

CAUTION

Turn off the main power at the circuit breaker before installing the fixture, in order to prevent possible shock.

GENERAL

All electrical connections must be in accordance with local and National Electrical Code (N.E.C.) standards. If you are unfamiliar with proper electrical wiring connections obtain the services of a qualified electrician.
Remove the fixture and the mounting package from the box and make sure that no parts are missing by referencing the illustrations on the installation instructions.

TOOLS REQUIRED

Phillips Screwdriver.

ASSEMBLY AND INSTALLATION

Turn off the power at fuse or circuit breaker.

NOTE: Fixtures are suitable for up or down mounting.

1. Before beginning the installation, carefully unpack and identify all parts (Refer to Figure 1).
2. Using 2 JUNCTION BOX SCREWS, securely fasten the CROSSBAR to the JUNCTION BOX.
3. MAKE CONNECTIONS: (We recommend 2 people for the remainder of installation) Connect the SUPPLY GROUND WIRE to the FIXTURE GROUND WIRE with a wire connector and then secure it to the CROSSBAR with GREEN GROUND SCREW. Using wire Connectors, connect the SUPPLY WHITE WIRE(S) to the FIXTURE WHITE(or RIBBED) LEAD(S); Connect the SUPPLY BLACK (or RED) WIRE to the FIXTURE BLACK (or SMOOTH) LEAD(S). Wrap all connections with approved electrical tape.
4. Place the WALL PLATE over the CROSSBAR and secure it with (2) LOCKING NUTS.
5. Locate the GLASS SHADE(S) and pull over the SOCKET(S), Thread SOCKET RING(S) onto end of the SOCKET(S). Hand tighten until snug.
6. Install the LIGHT BULB(s) (Sold separately), referring to fixture labels for max wattage. The bulb quantities depend on the style (Refer to Figure 2).

Turn on the power at fuse or circuit breaker.

IF IN DOUBT ABOUT ELECTRICAL INSTALLATION, CONSULT A LICENSED ELECTRICIAN.

Customer Service:
1-800-558-8700

FIGURE 1.

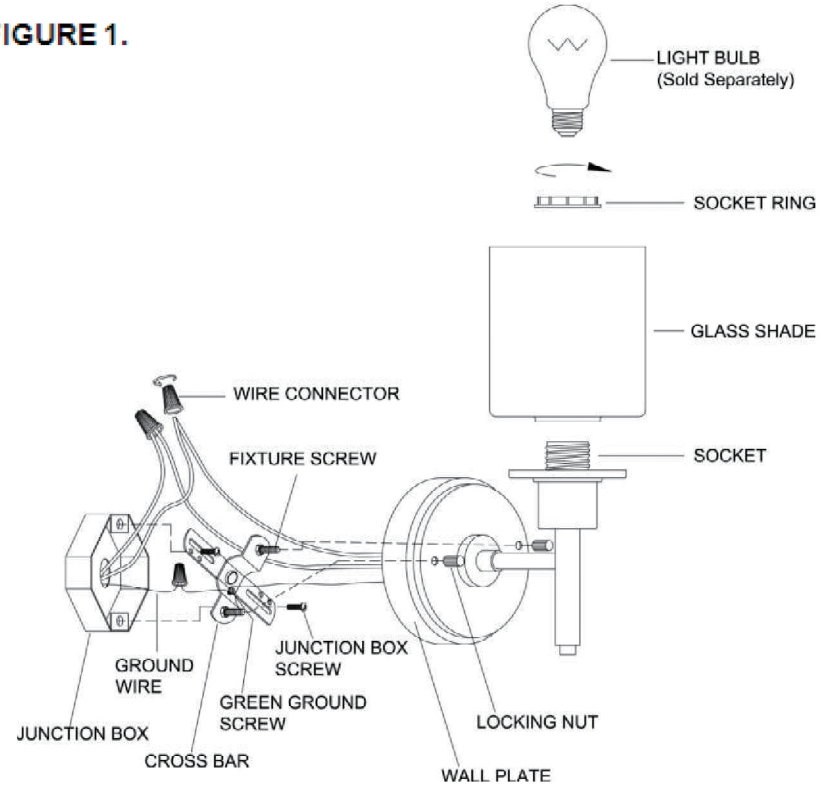
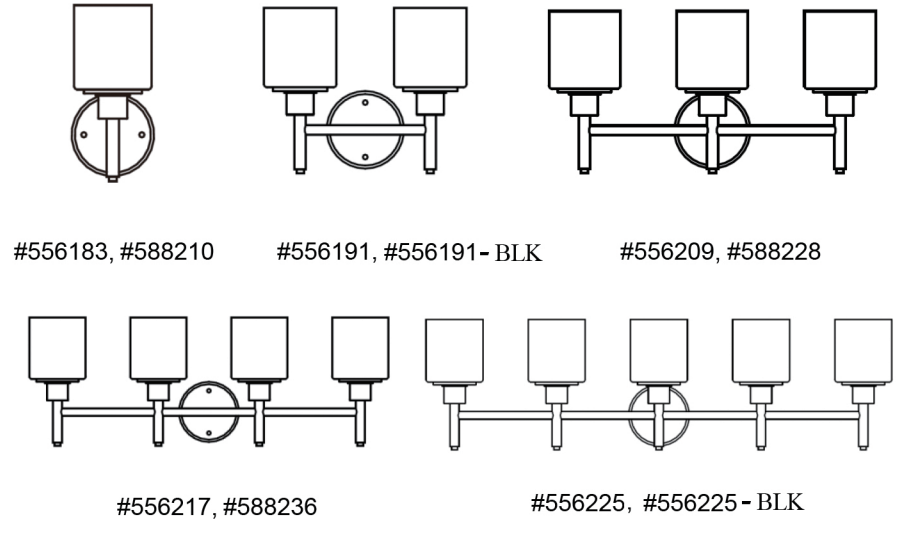
FIGURE 2.