INSTALLATION
Product Manual

Version: 330125-01-24A-SCX

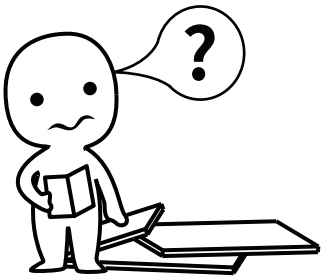

IMPORTANT INFORMATION!

please read the entire manual before starting to assemble and/or using this product.follow the manual thoroughly and keep it for further reference.

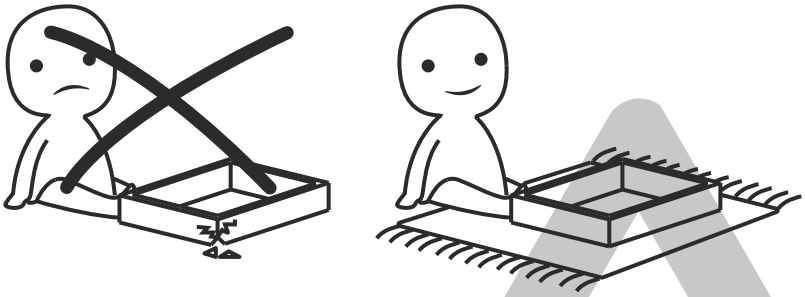

AVOID SCRATCHES!

In order to avoid scratching this furnuture should be assembled on a soft layer-could be a rug.

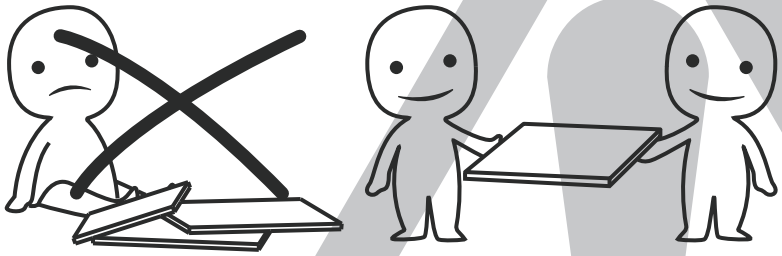

IMPROVE EFFICIENCY !

Try to find a partner to install with you, which can speed up the installation efficiency and shorten the time.

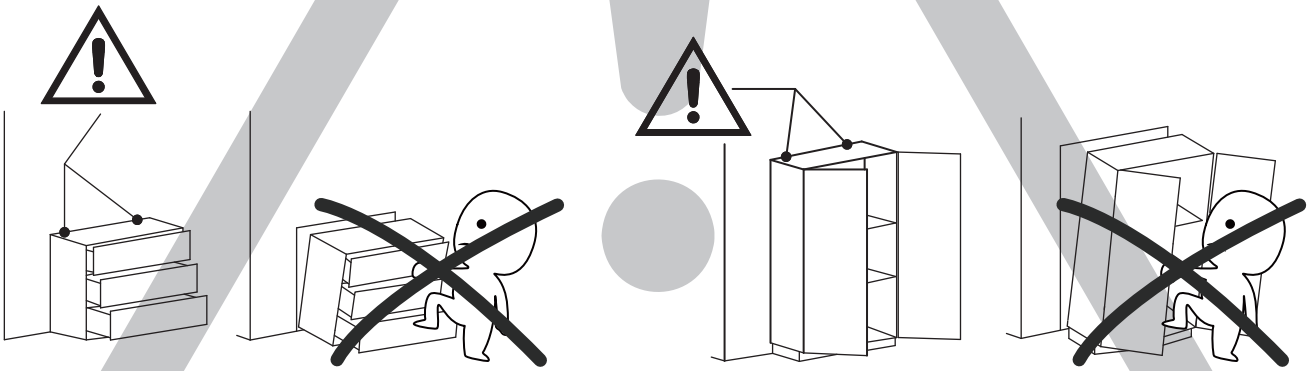

ANTI-TOPPLE WARNING !

Overturned furniture can cause serious or fatal crush injuries. To prevent tipping over, be sure to use the wall attachment, if not included with this product. Please purchase the wall attachment that fit your wall. If unsure, seek professional advice. Please read and follow each step of the instructions carefully.

IMPORTANT !

It is important that any product which is assembled using any kind of screw is re-tightened 2 weeks after assembly,and once every 3 months - in order to assure stability through-out the lifespan of the product.

For regular maintenance and cleaning of the product, for the frame, please use a rag dipped in neutral detergent to fully wipe it, and then dry it with a clean rag.For glass materials, wipe with a rag dampened with water glass cleaner, and then dry with a dry rag.

Do not use an electric screwdriver, and do not use too much force when installing, because the board is easy to break.

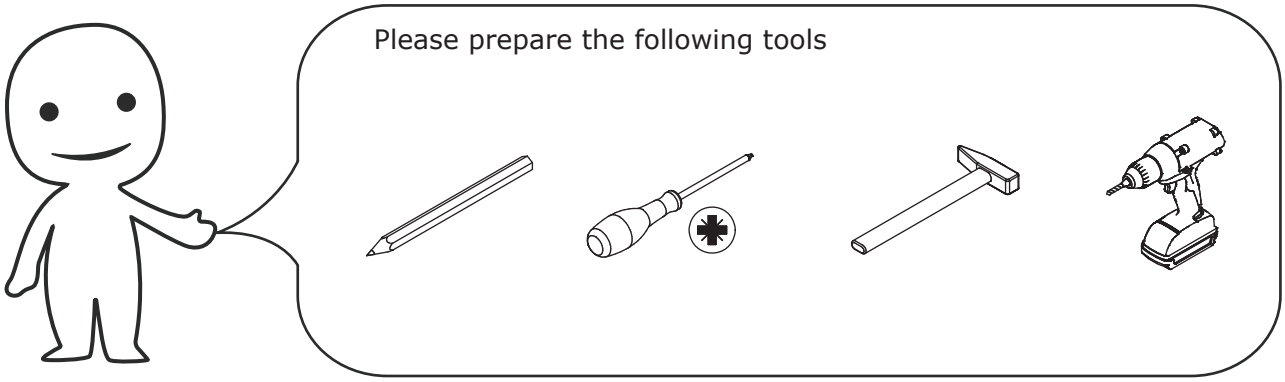

When installing, please carefully confirm whether each screw corresponds to the manual, accessories with similar shapes can be distinguished by size

A x 2	B x 2	C x 2	D x 2	E x 38+1
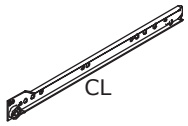 L = 350 mm	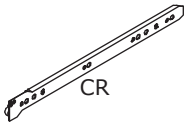 L = 350 mm	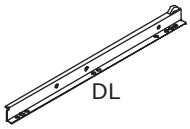 L = 350 mm	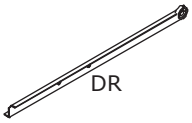 L = 350 mm	∅3 x 12 mm
F x 43+1	**G x 26+1**	**H x 43+1**	**J x 4**	**K x 24+1**
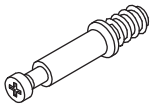 ∅6 x 35 mm	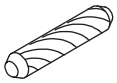 ∅8 x 30 mm	∅15 x 10 mm	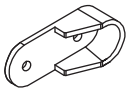	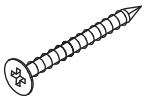 ∅4 x 35 mm
L x 64+1	**M x 8**	**N x 3**	**P x 54+1**	**Q x 1**
∅3 x 12 mm	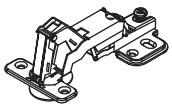	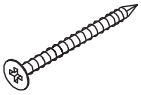 ∅4 x 40 mm	∅4 x 14 mm	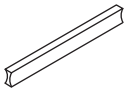
R x 2	**S x 2**	**T x 3**	**U x 2**	**V x 3**
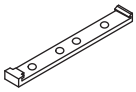		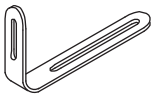	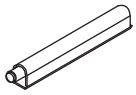	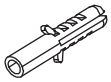
W x 2	**X x 2**			
	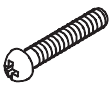 ∅4 x 18 mm			

① 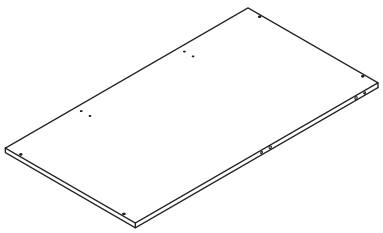 1PC	② 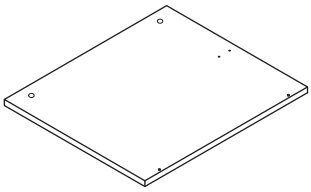 1PC	③ 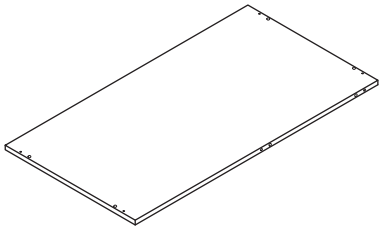 1PC
④ 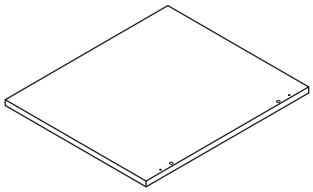 1PC	⑤ 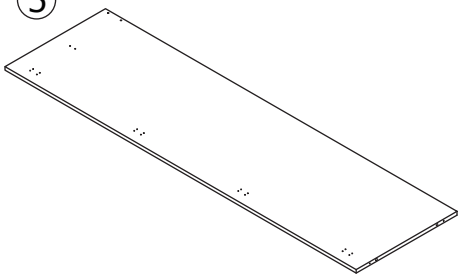 1PC	⑥ 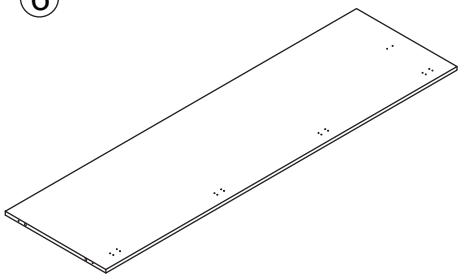 1PC
⑦ 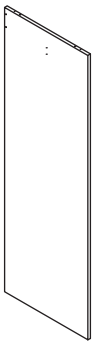 1PC	⑧ 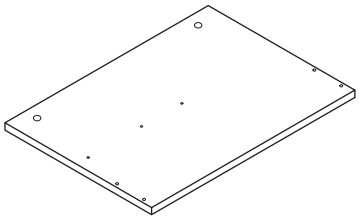 1PC	⑨ 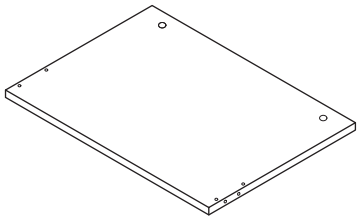 1PC
⑩ 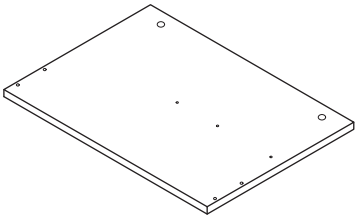 1PC	⑪ 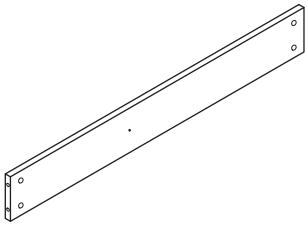 1PC	⑫ 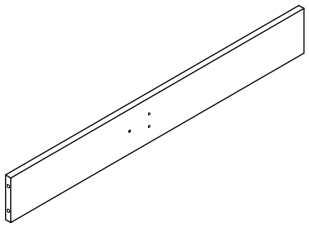 1PC
⑬ 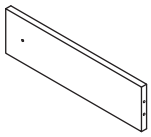 2PCS	⑭ 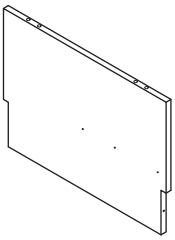 1PC	⑮ 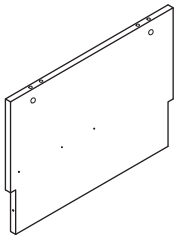 1PC

16 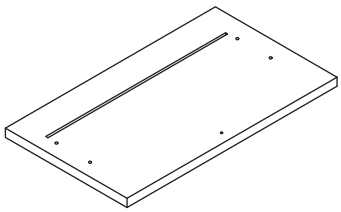 1PC	17 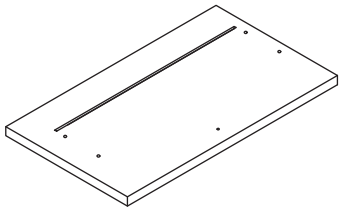 1PC	18 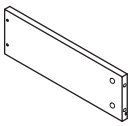 2PCS
19 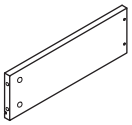 2PCS	20 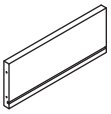 2PCS	21 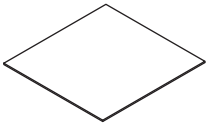 2PCS
22 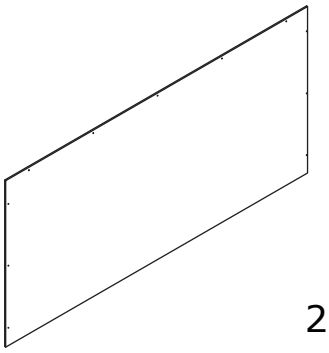 2PCS	23 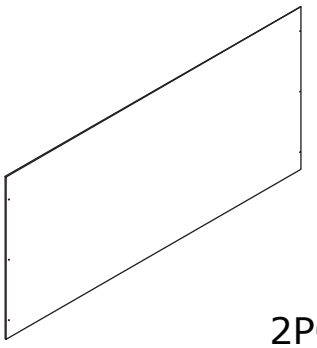 2PCS	24 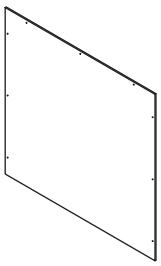 2PCS
25 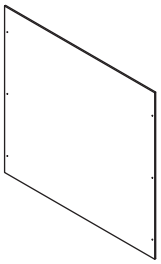 2PCS	26 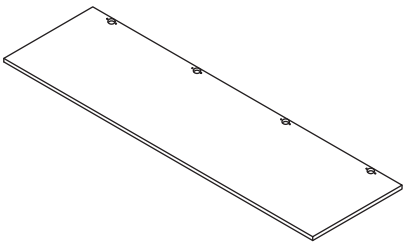 1PC	27 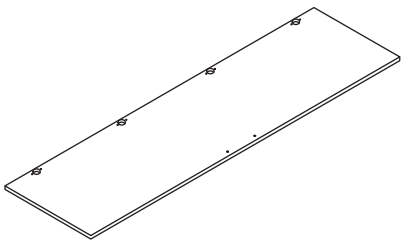 1PC
28 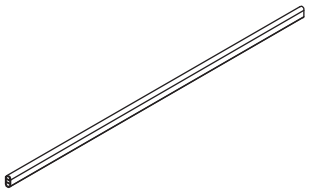 2PCS	29 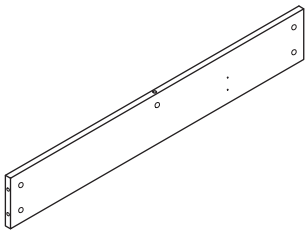 1PC	30 3PCS

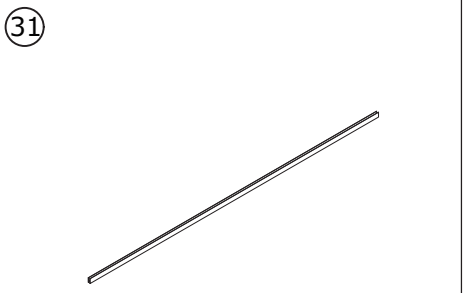

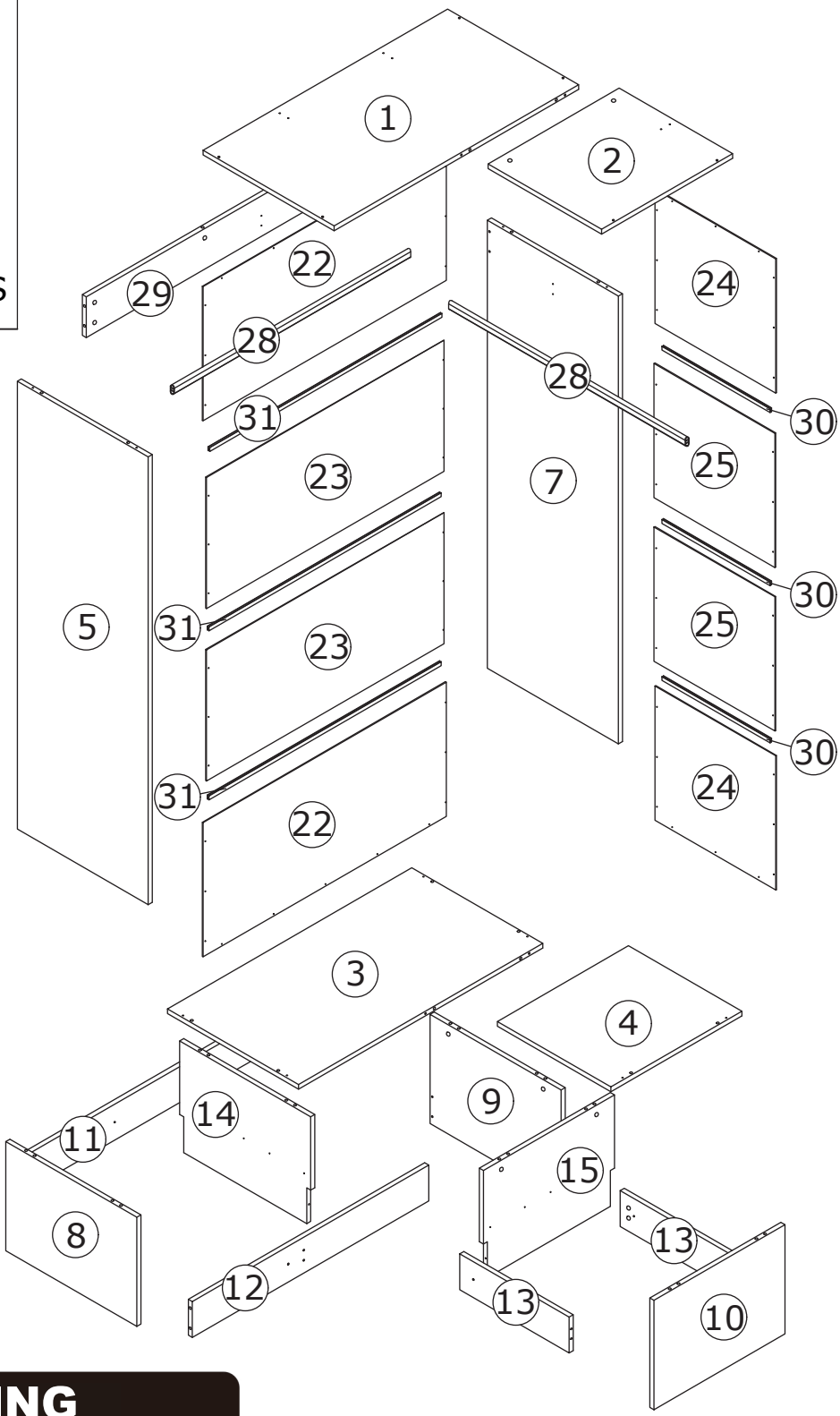

⚠WARNING

Children have died from furniture tipover.To reduce the risk of furniture tipover:

- ALWAYS install Anti-tip device provided.
- NEVER put a TV on this product.
- NEVER allow children to stand,climb or hang on drawers,doors,or shelves.
- NEVER open more than one drawer at a time.
- Place heaviest items in the lowest drawers.

This is a permanent label.
Do not remove!

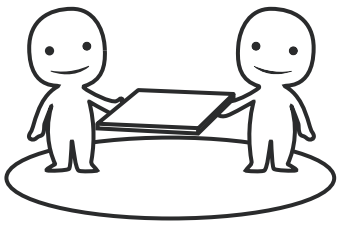

ASSEMBLED BY 2 ADULTS

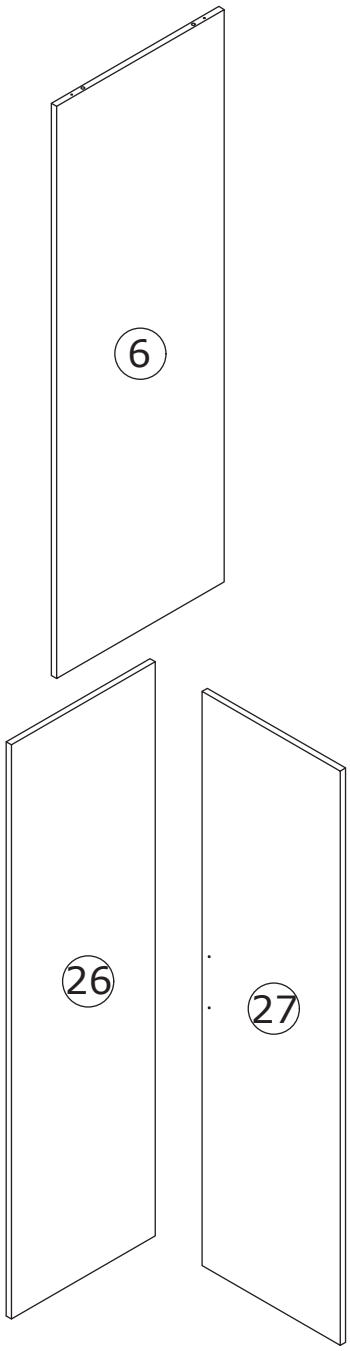

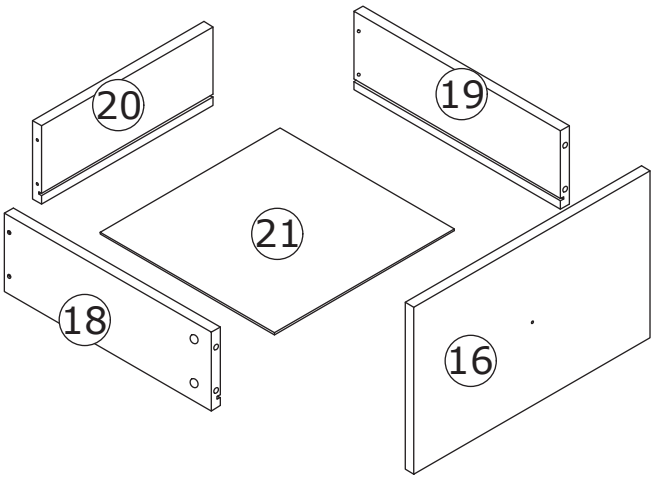

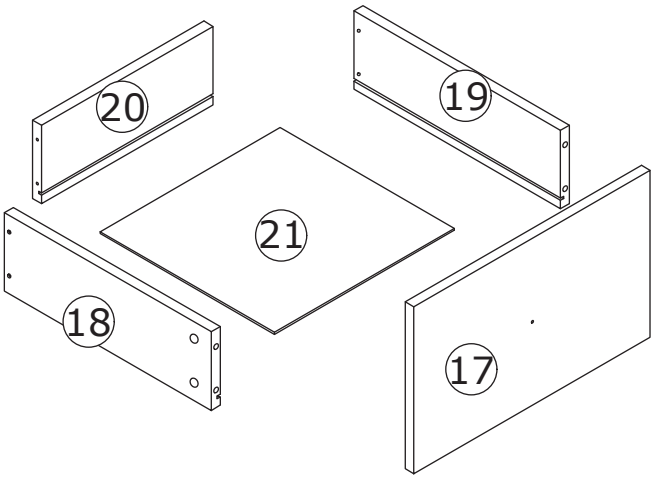

⚠WARNING

Children have died from furniture tipover.To reduce the risk of furniture tipover:

- ALWAYS install Anti-tip device provided.
- NEVER put a TV on this product.
- NEVER allow children to stand,climb or hang on drawers,doors,or shelves.
- NEVER open more than one drawer at a time.
- Place heaviest items in the lowest drawers.

This is a permanent label.
Do not remove!

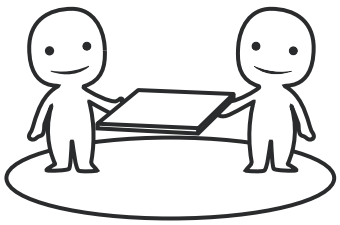

ASSEMBLED BY 2 ADULTS

1

A x 1	B x 1	E x 6	
CL L = 350 mm	CR L = 350 mm	∅3 x 12 mm	

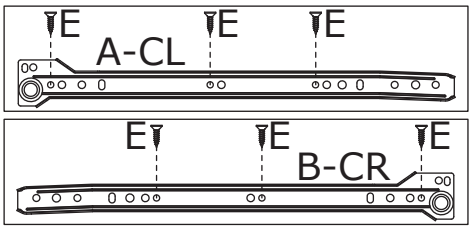

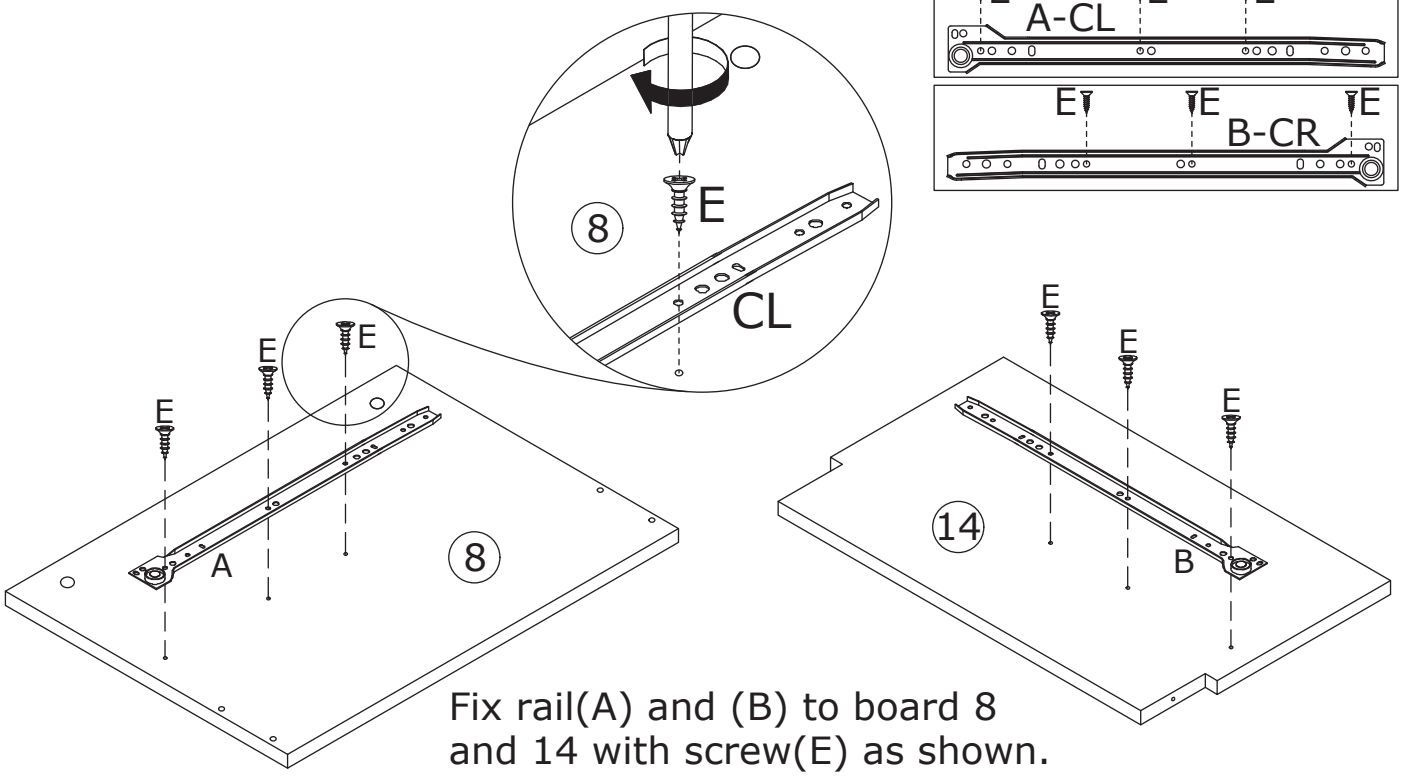

Fix rail(A) and (B) to board 8 and 14 with screw(E) as shown.

2

F x 10	
∅6 x 35 mm	

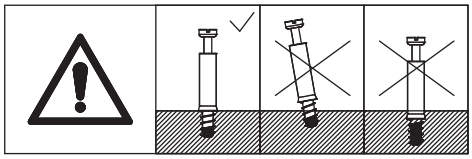

Screw eccentric rod(F) into board 8 and 9 at first.

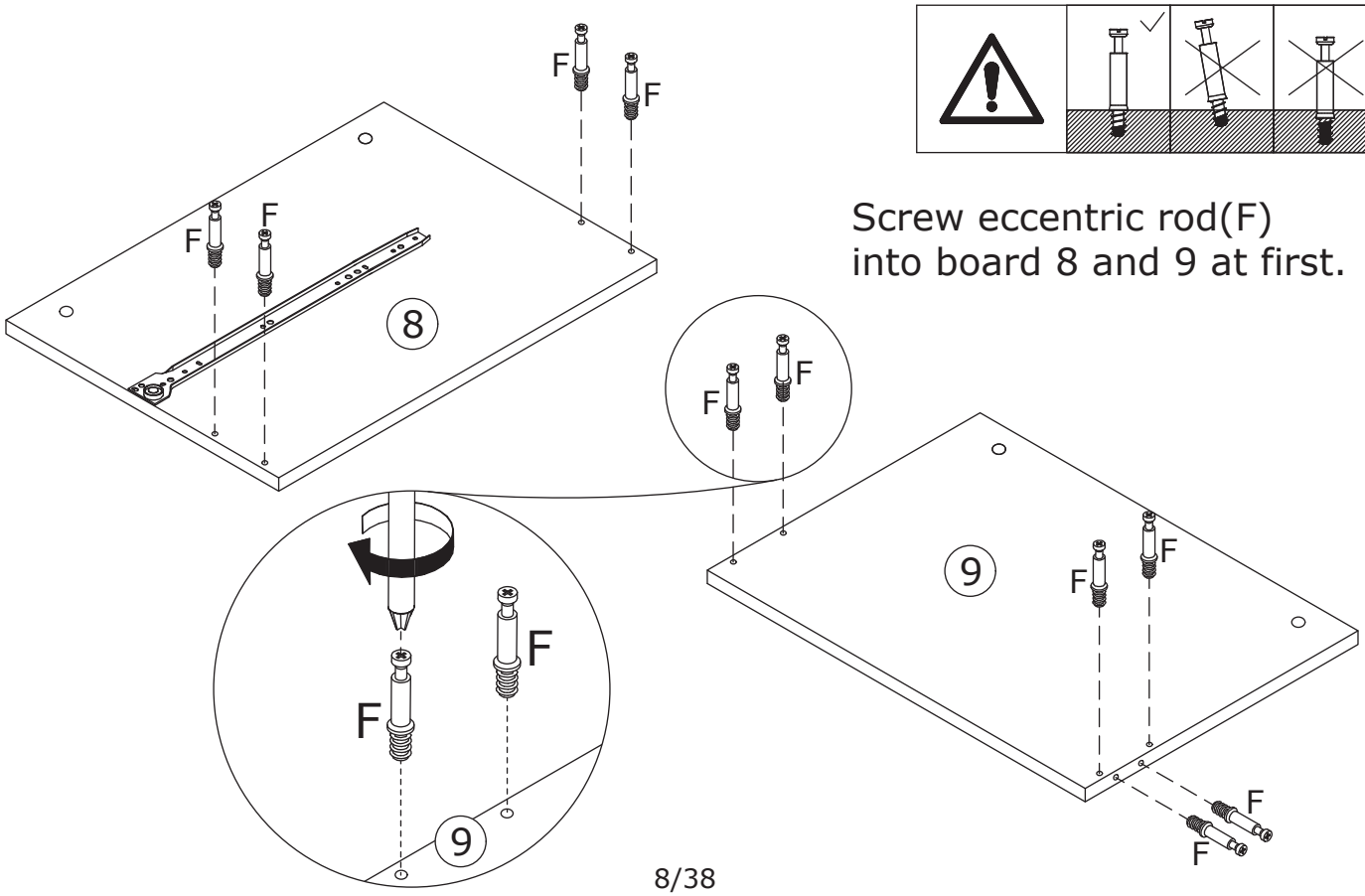

3

F x 2

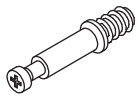

∅6 x 35 mm

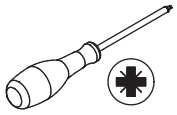

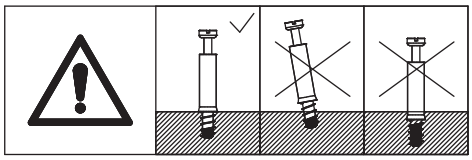

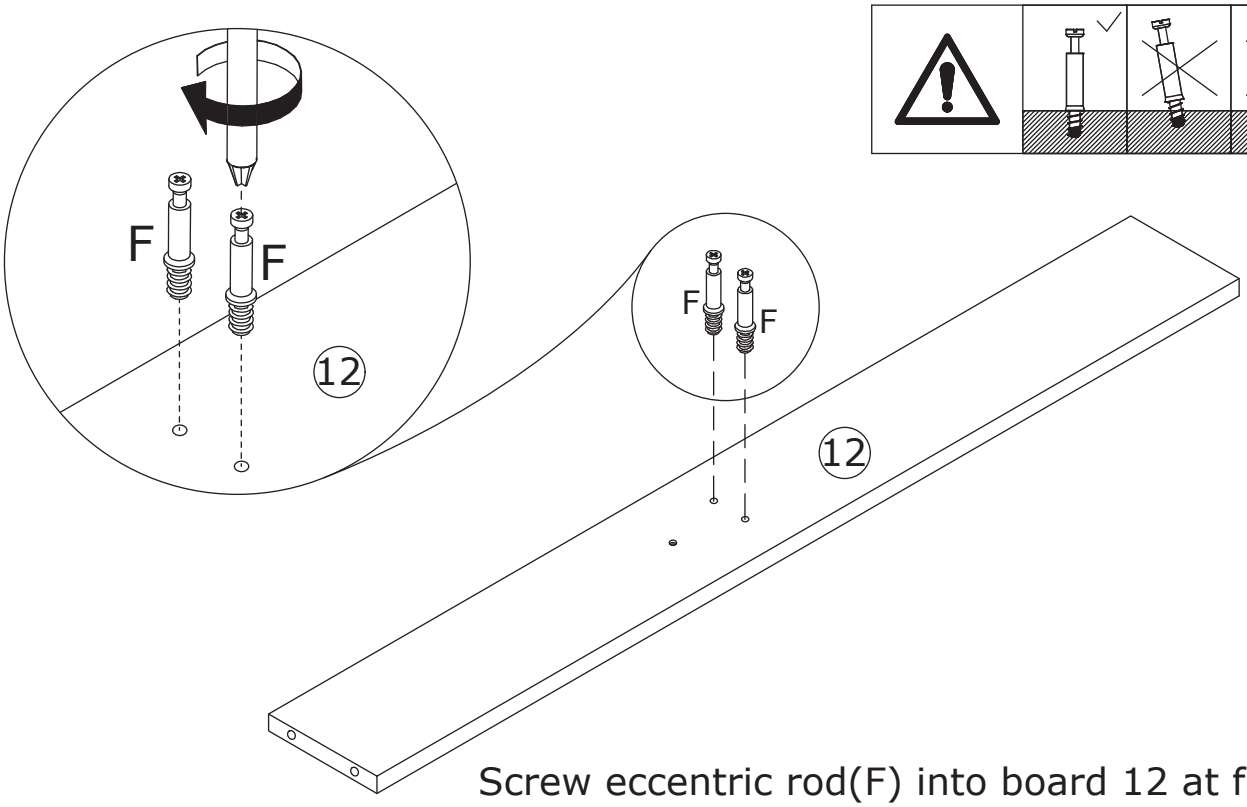

Screw eccentric rod(F) into board 12 at first.

4

K x 2

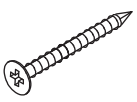

∅4 x 35 mm

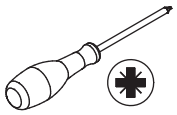

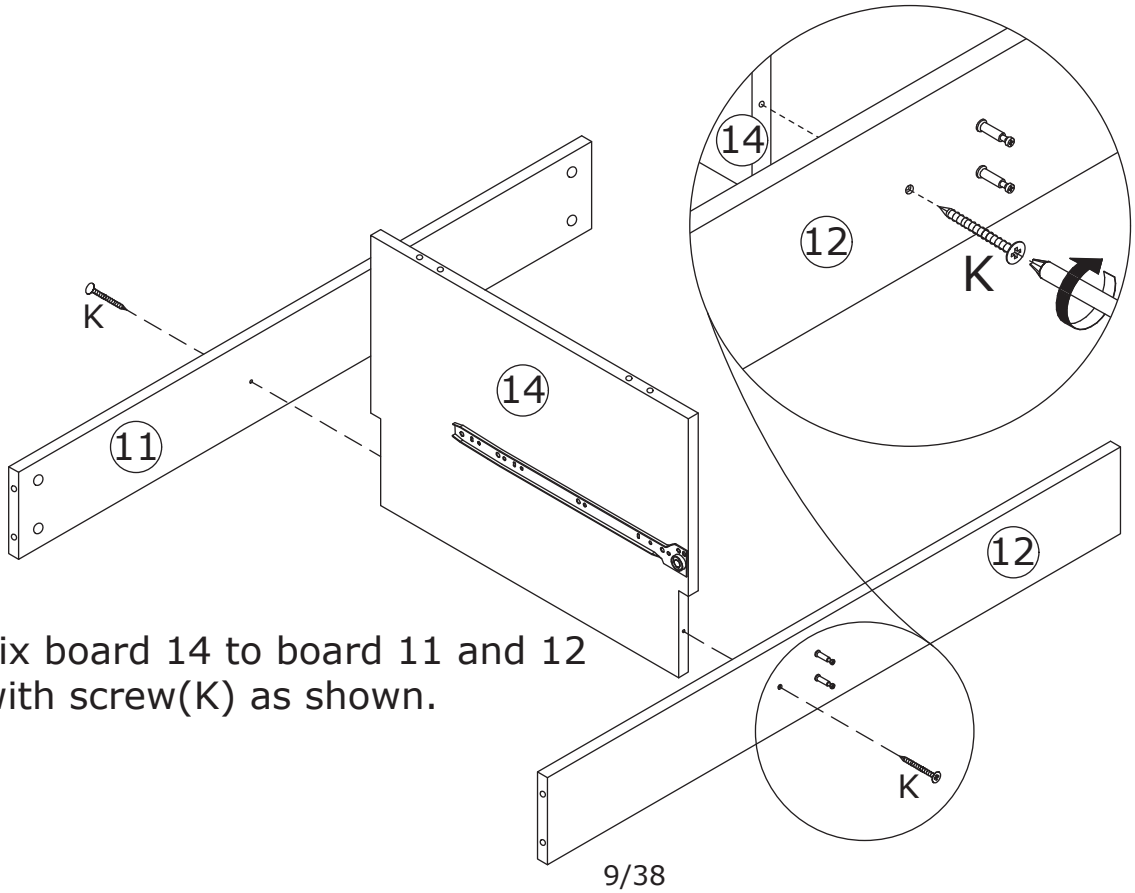

Fix board 14 to board 11 and 12 with screw(K) as shown.

5

H x 8

∅15 x 10 mm

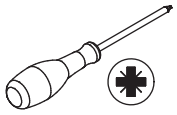

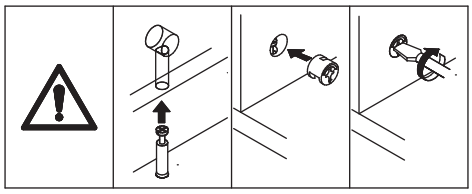

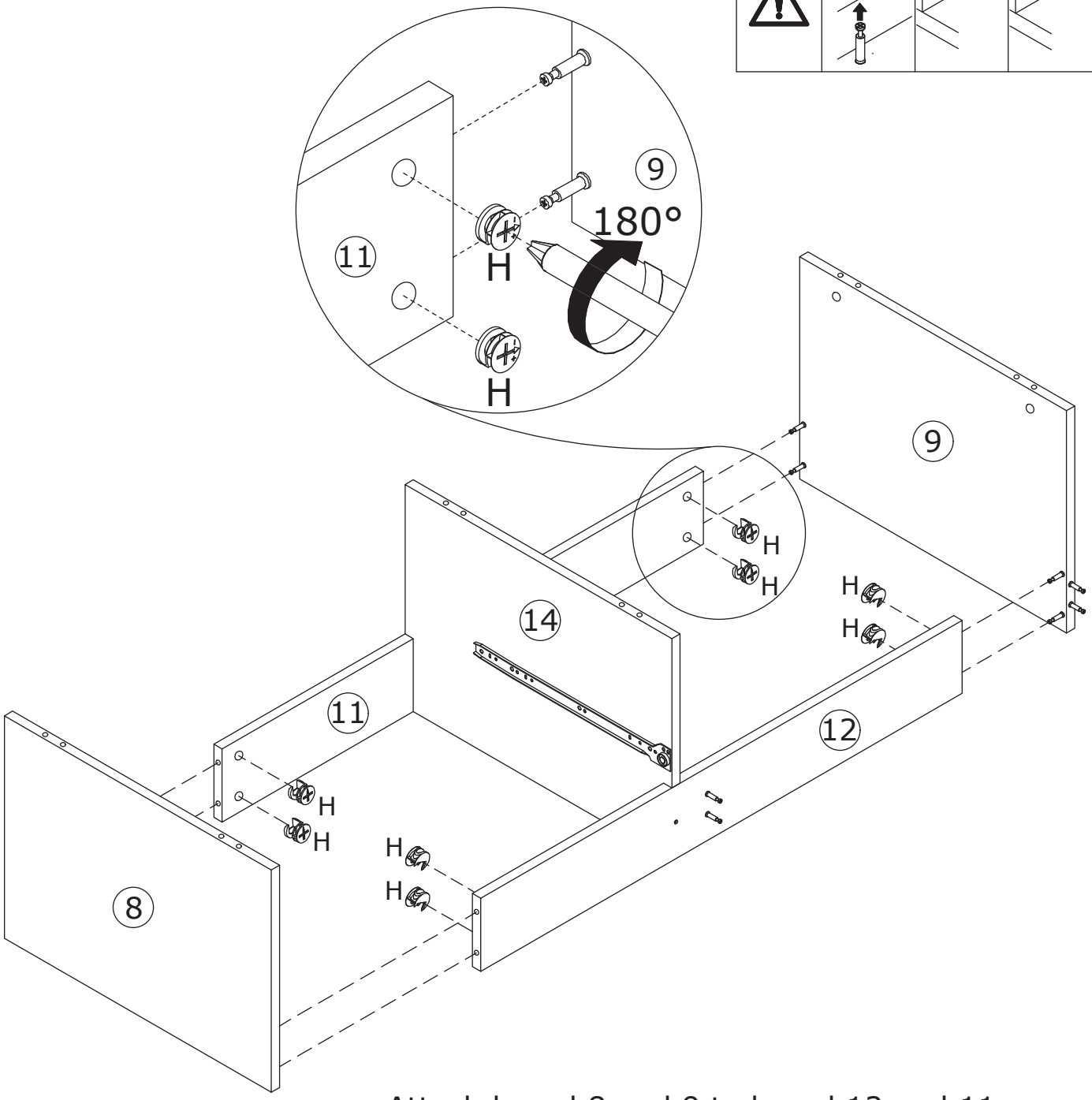

Attach board 8 and 9 to board 12 and 11, add cam lock(H) into board 11,12 and turn clockwise to tighten as shown.

6

E x 6	J x 3	
∅3 x 12 mm	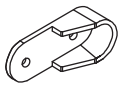	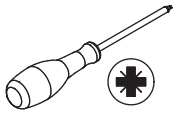

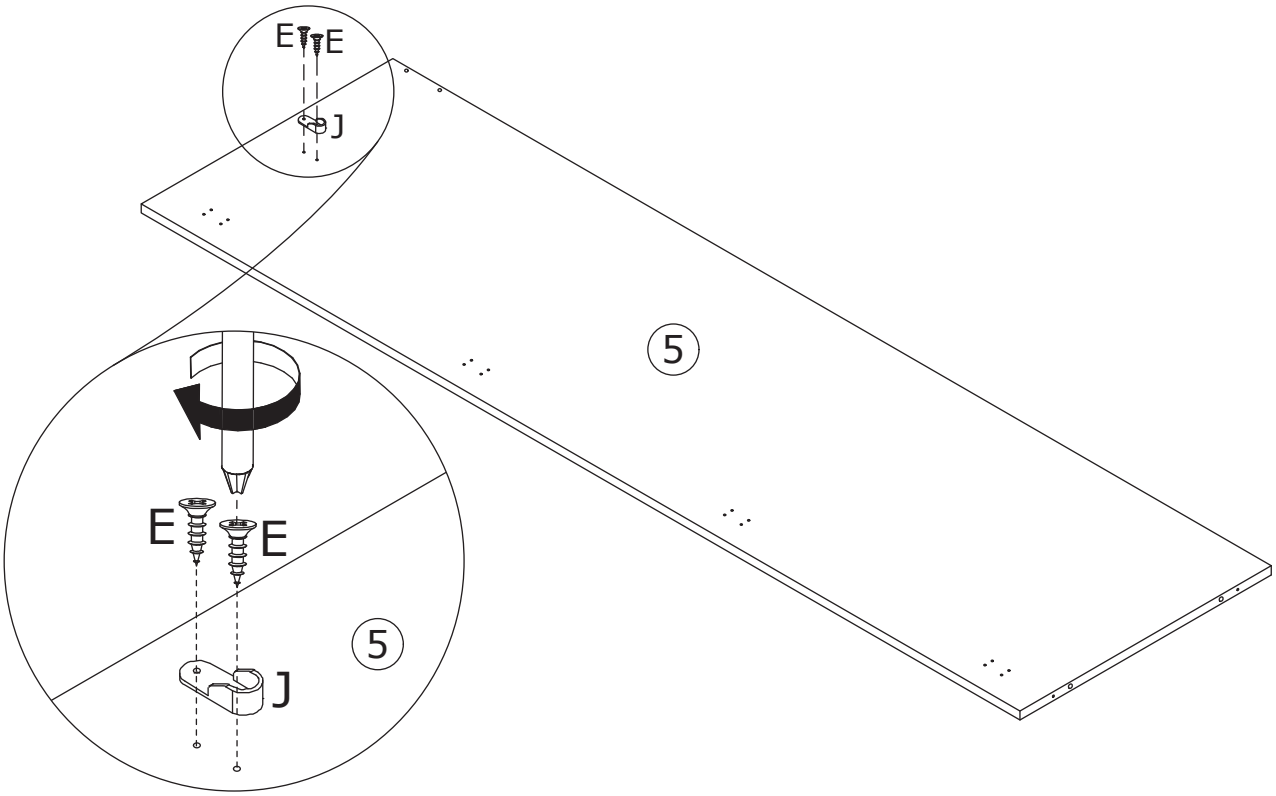

Fix part(J) to board 5, 7 and 9
with screw(E) as shown.

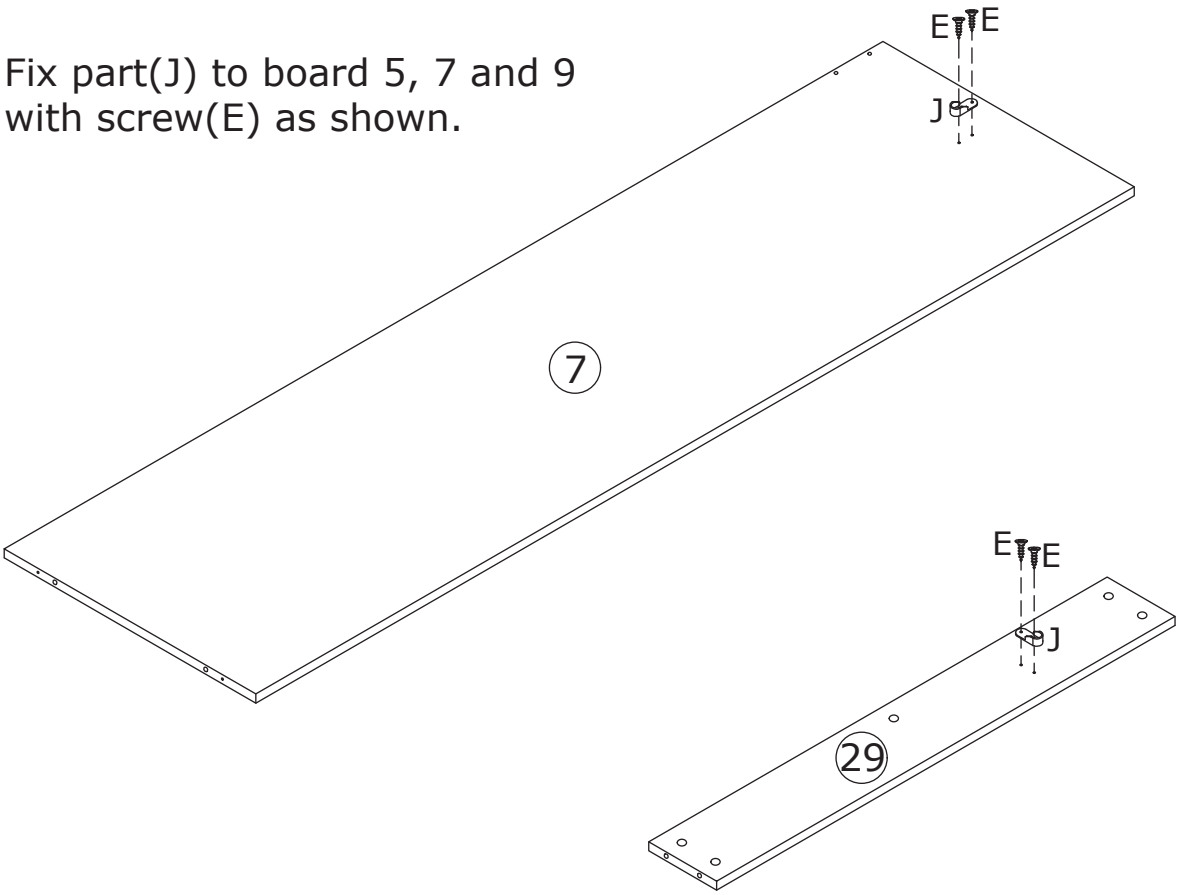

7

F x 4

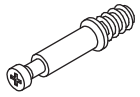

∅6 x 35 mm

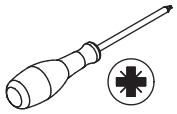

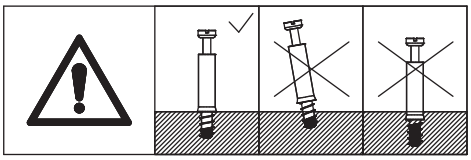

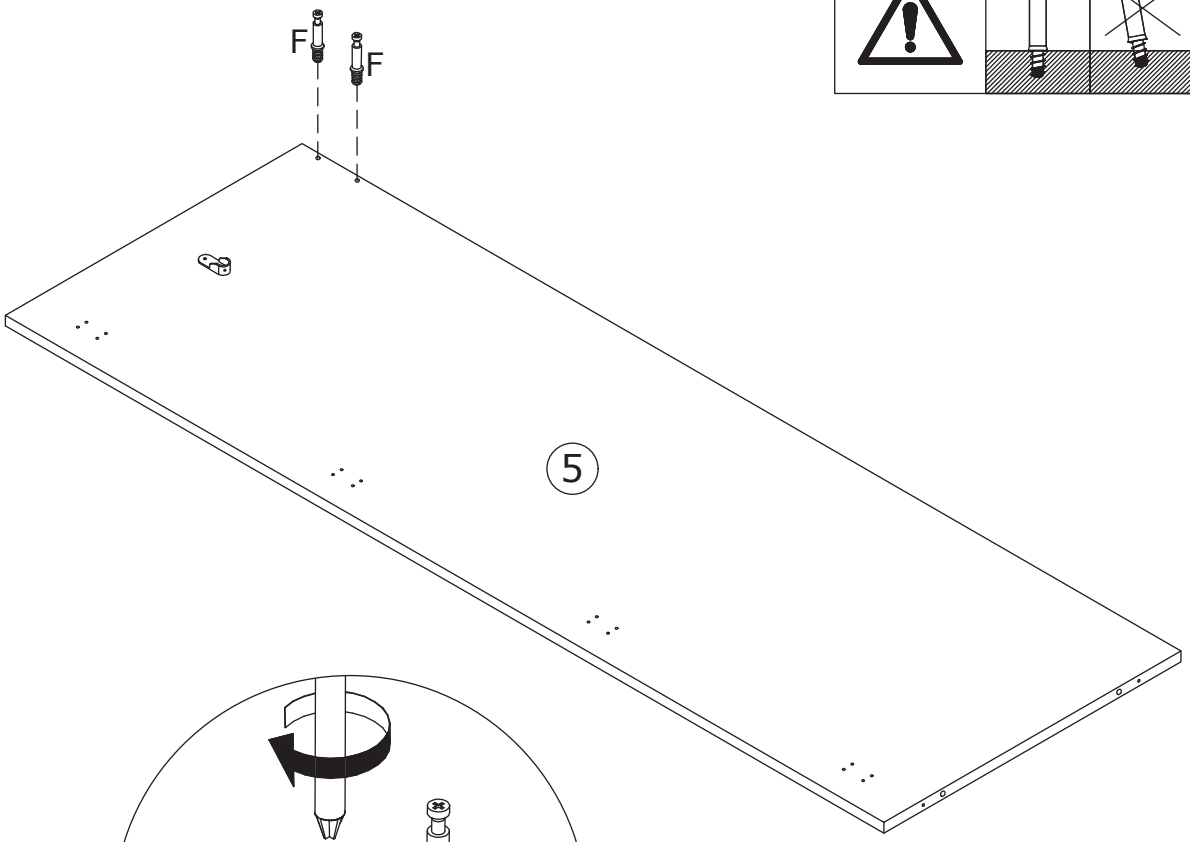

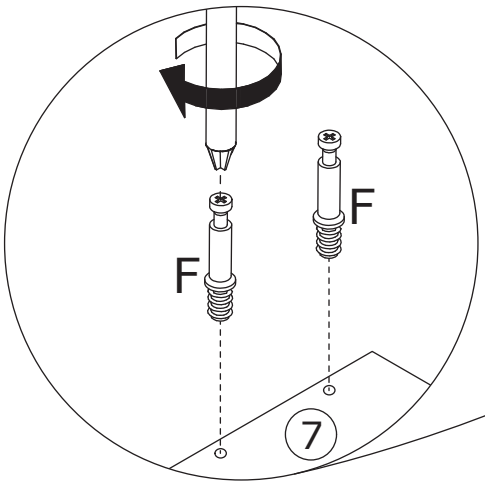

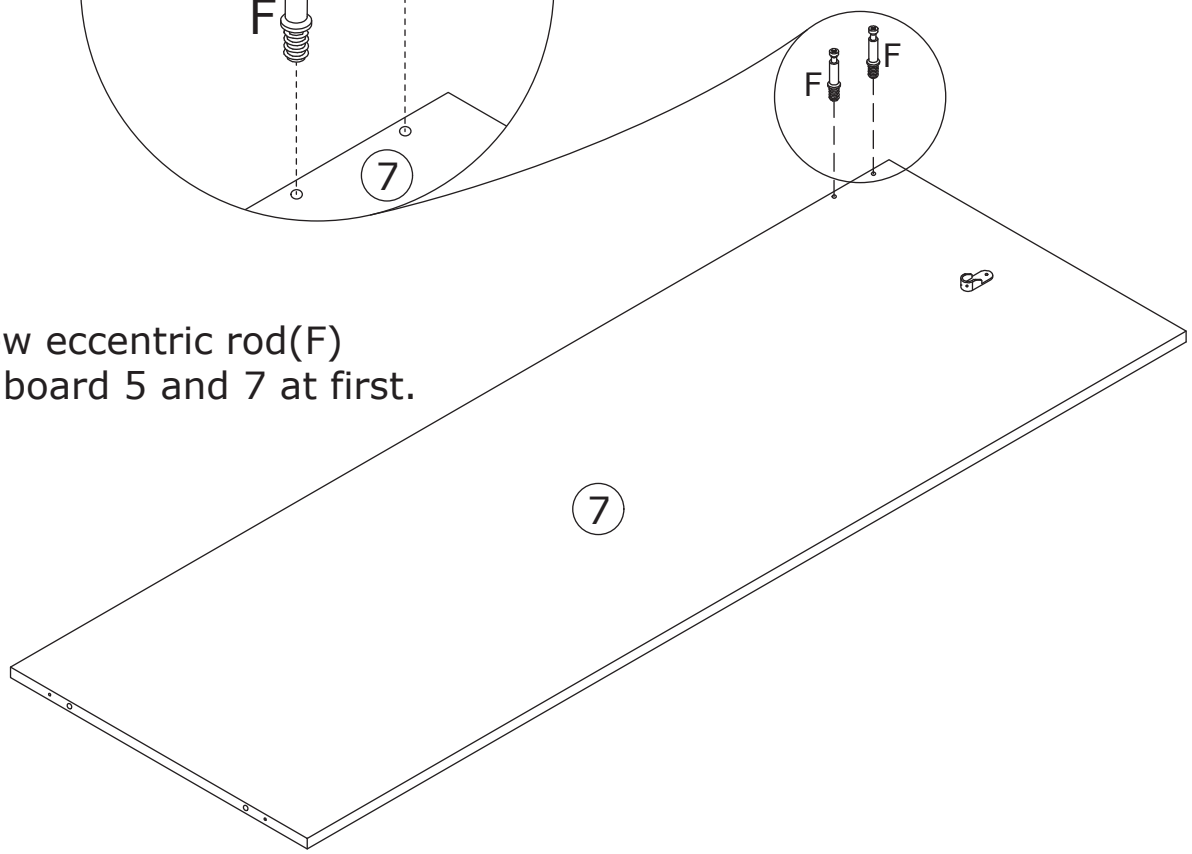

Screw eccentric rod(F)
into board 5 and 7 at first.

8

H x 4
∅15 x 10 mm

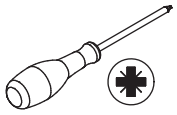

Connect board 5 and 7 to board 29, add cam lock(H) into board 29 and turn clockwise to tighten as shown.

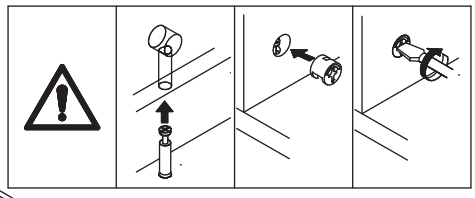

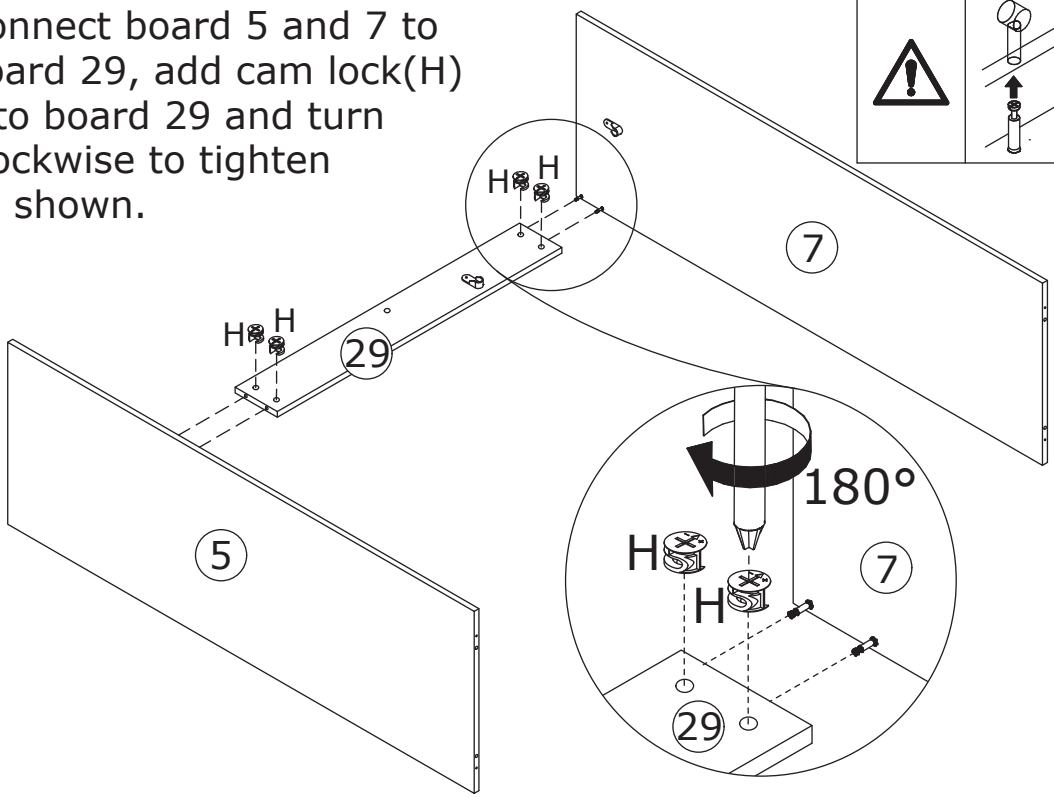

9

E x 2	F x 11	R x 1
	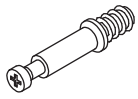	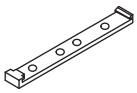
∅3 x 12 mm	∅6 x 35 mm	

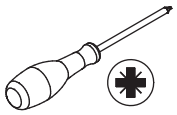

Screw eccentric rod(F) into board 1 and 3 at first.

Fix part(R) to board 3 with screw(E) as shown.

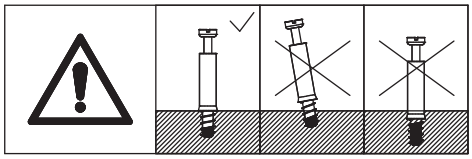

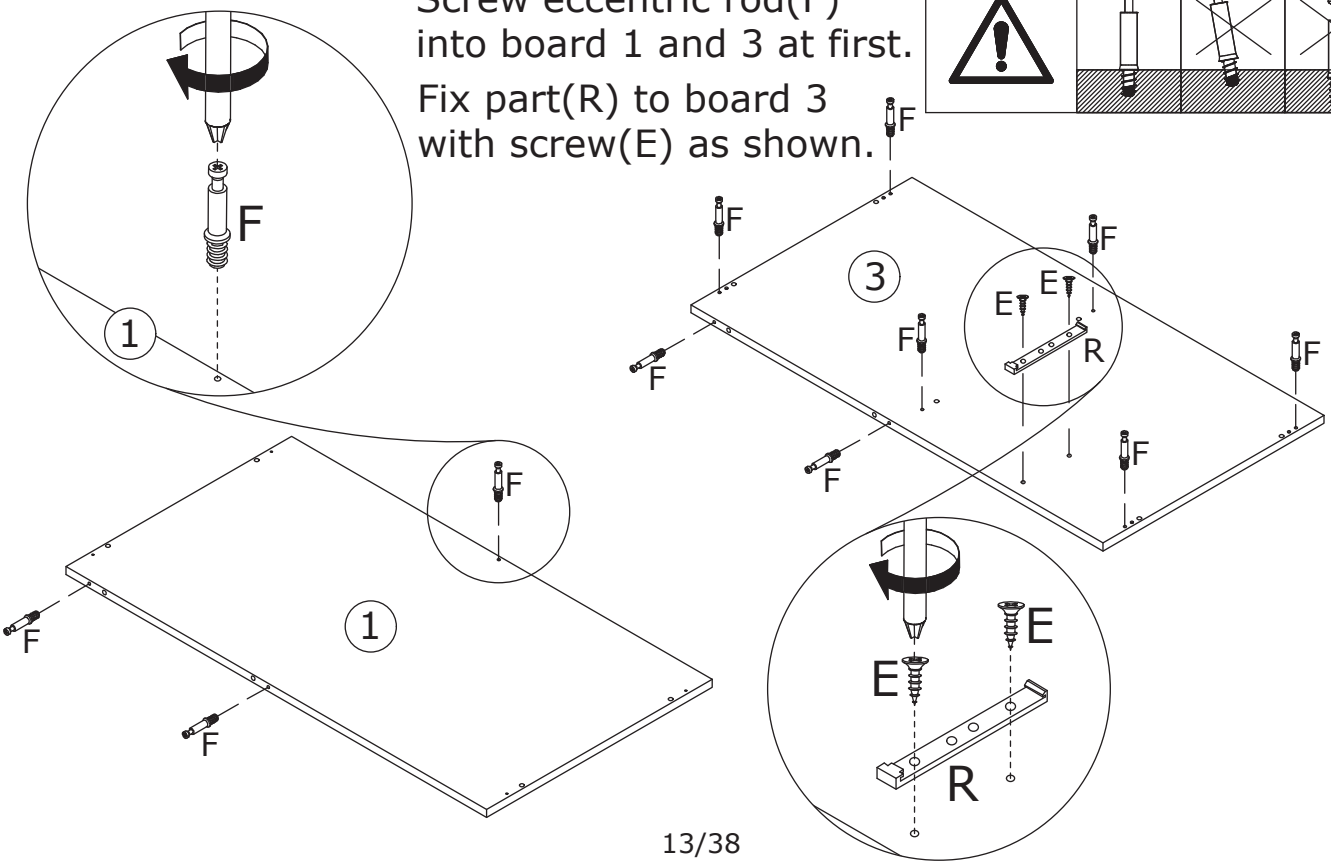

10

U x 1
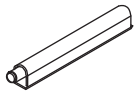

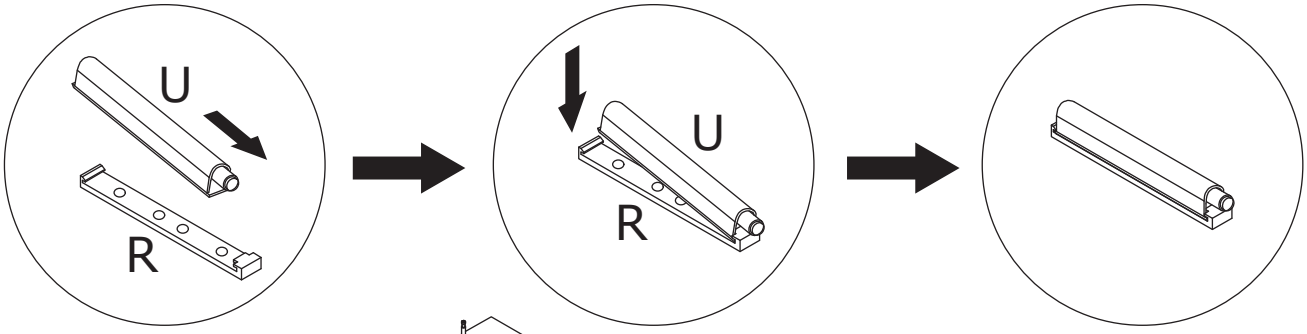

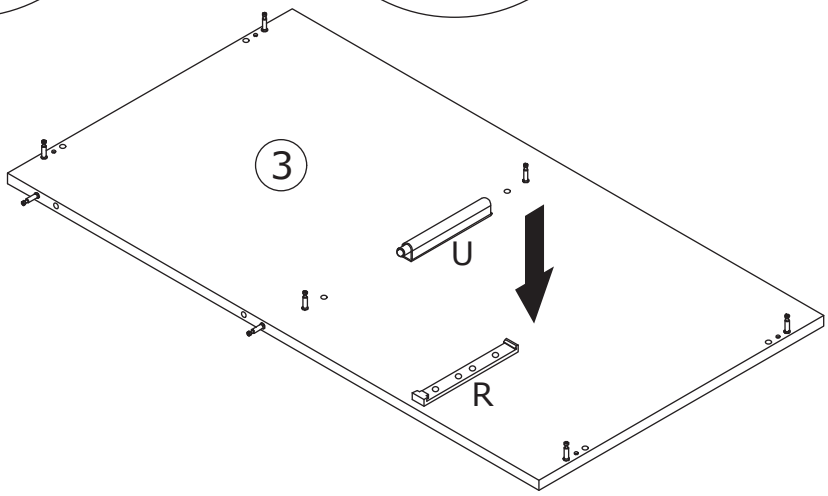

11

G x 4	K x 4	
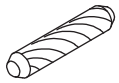 ∅8 x 30 mm	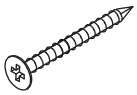 ∅4 x 35 mm	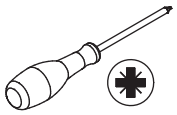

Attach board 3 to board 5 and 7 using wooden dowel(G), and fix with screw(K) as shown.

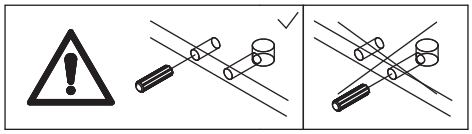

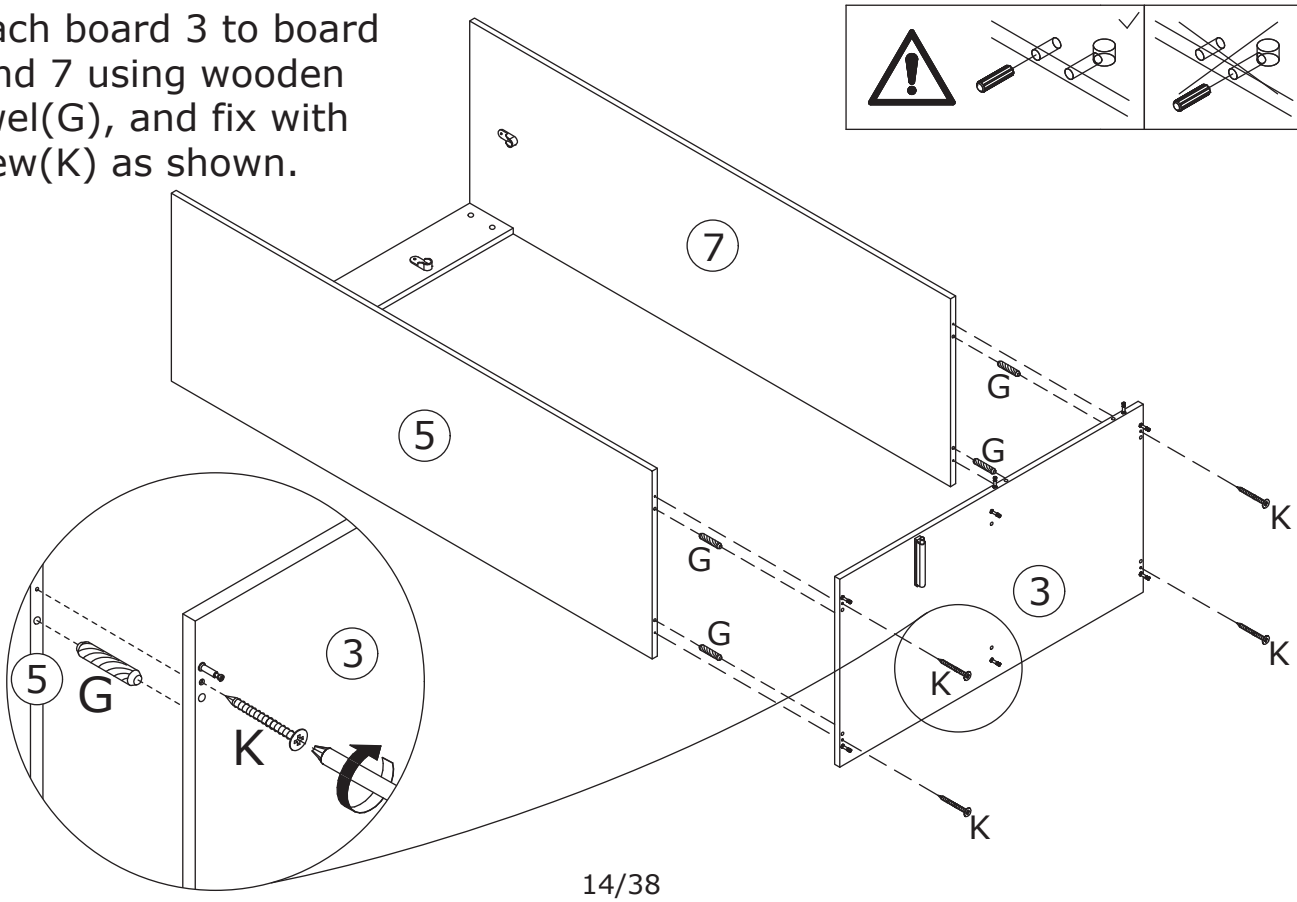

12

G x 4	H x 1	K x 4	
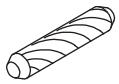		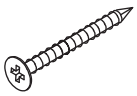	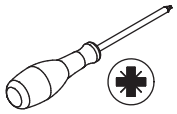
∅8 x 30 mm	∅15 x 10 mm	∅4 x 35 mm	

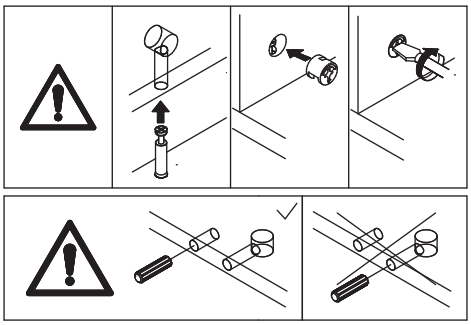

Attach board 1 to board 5, 29 and 7 using wooden dowel(G), and fix with screw(K) as shown.
Add cam lock(H) into board 29 and turn clockwise to tighten as shown.

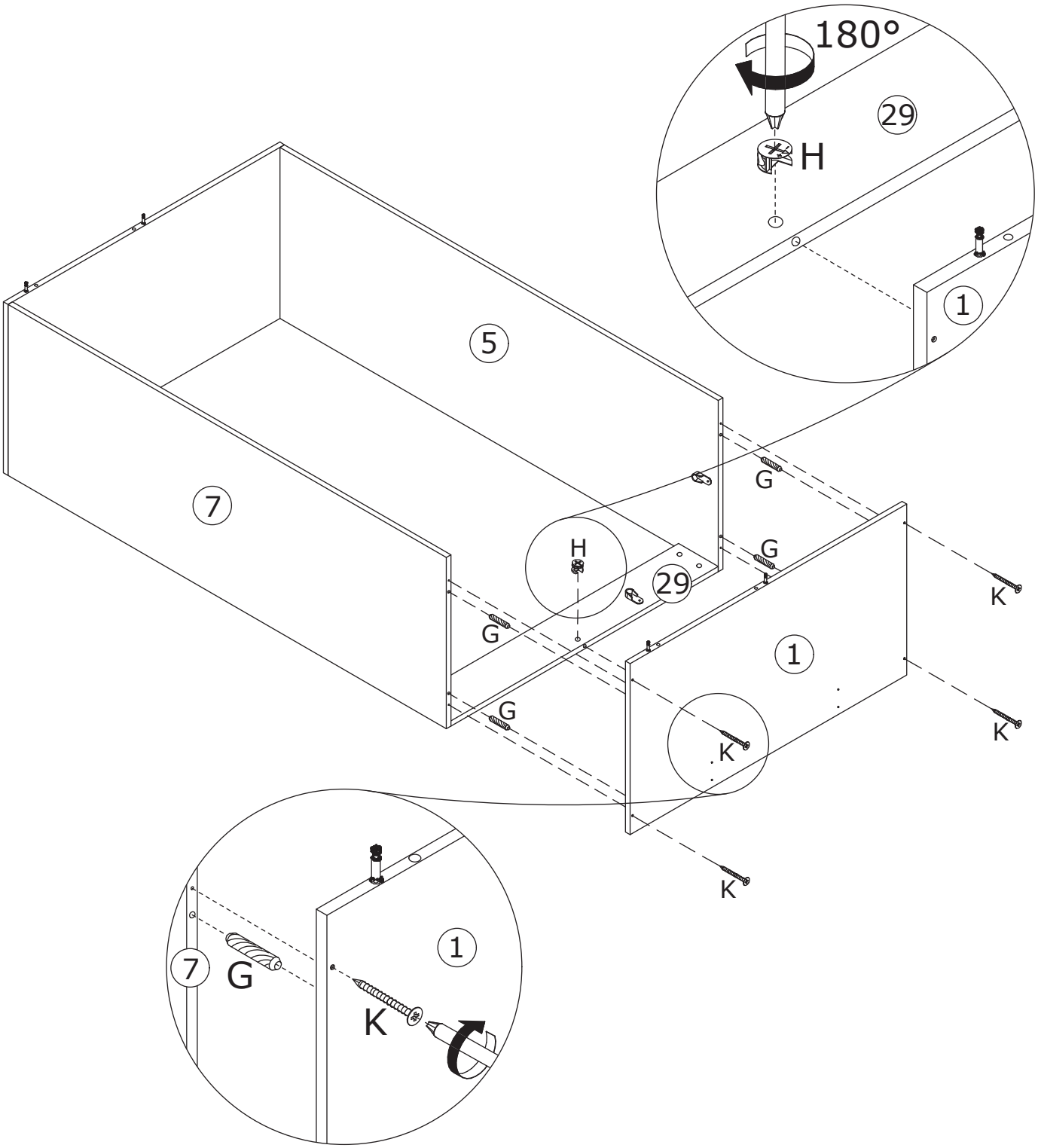

13

G x 6	H x 6	
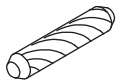		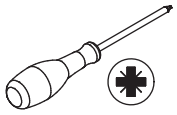
∅8 x 30 mm	∅15 x 10 mm	

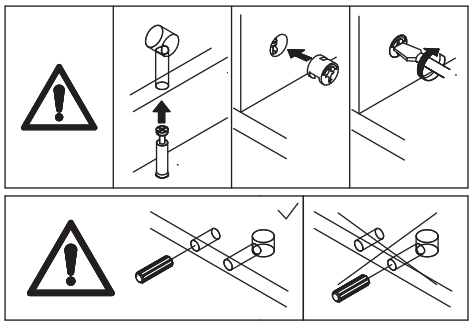

Connect the two components using wooden dowel(G), add cam lock(H) into and turn clockwise to tighten as shown.

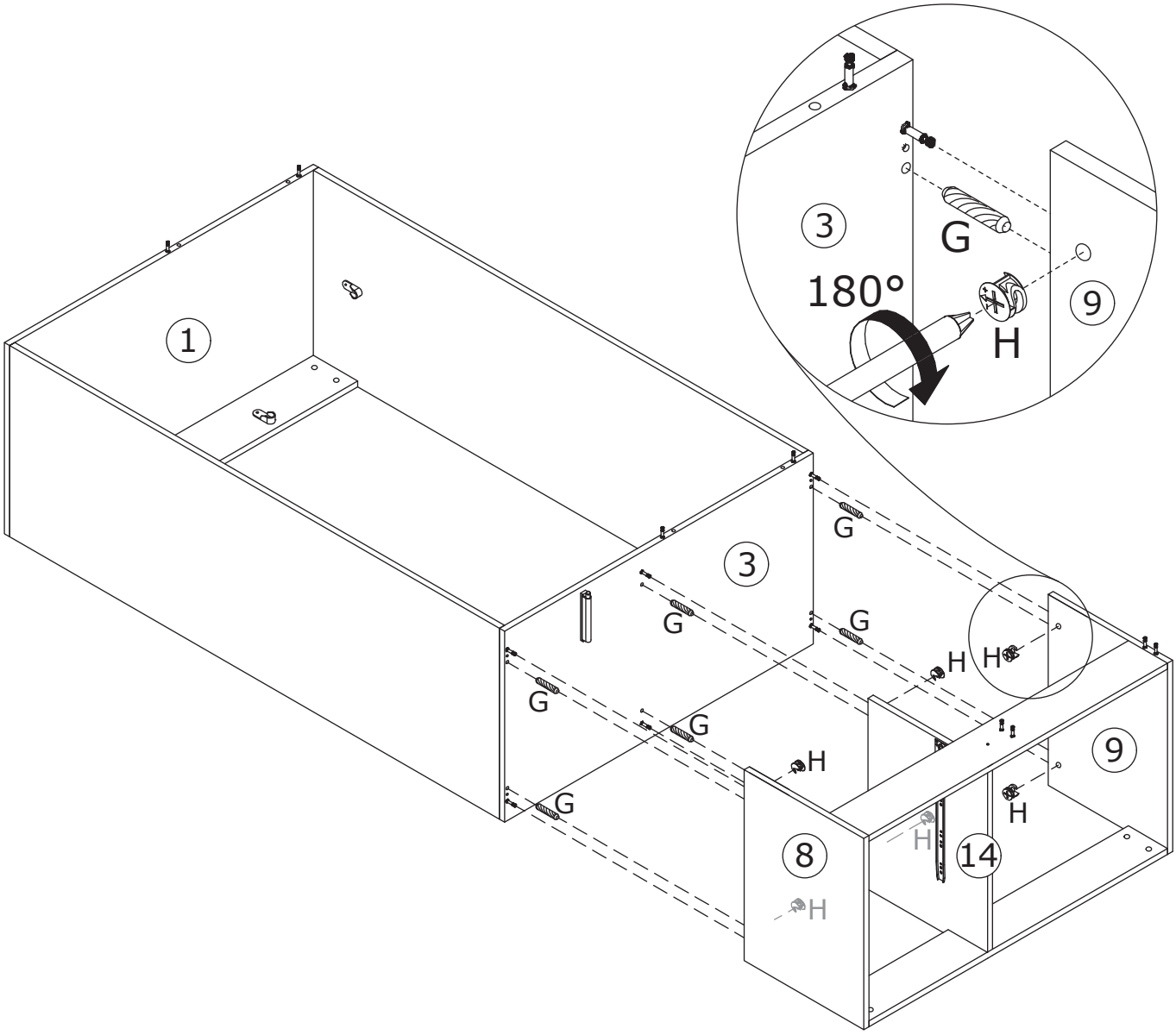

14

H x 4

∅15 x 10 mm

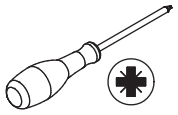

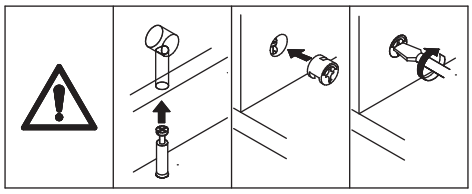

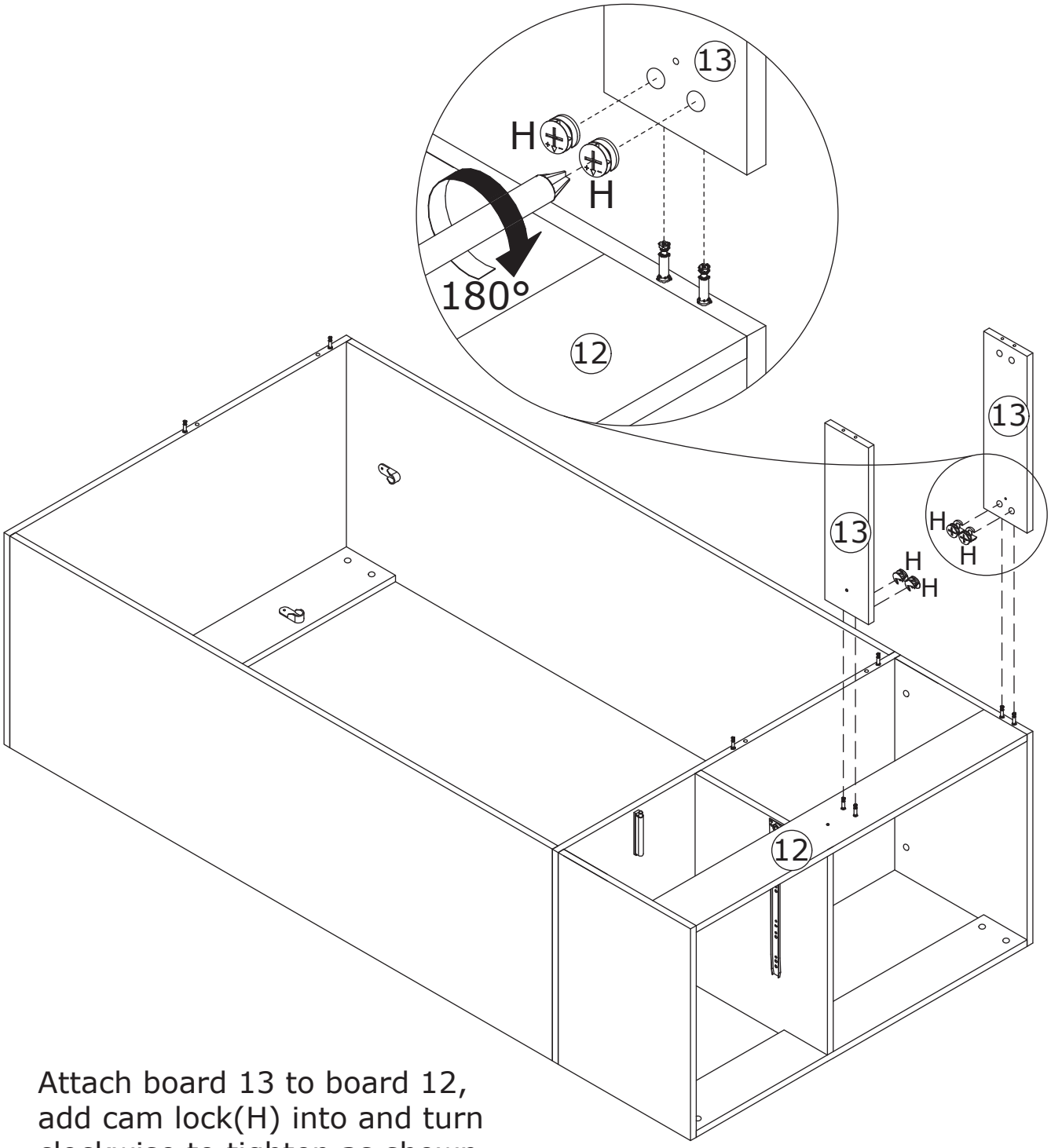

Attach board 13 to board 12, add cam lock(H) into and turn clockwise to tighten as shown.

15

E x 2	F x 4	R x 1	
∅3 x 12 mm	∅6 x 35 mm		

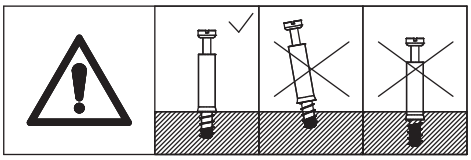

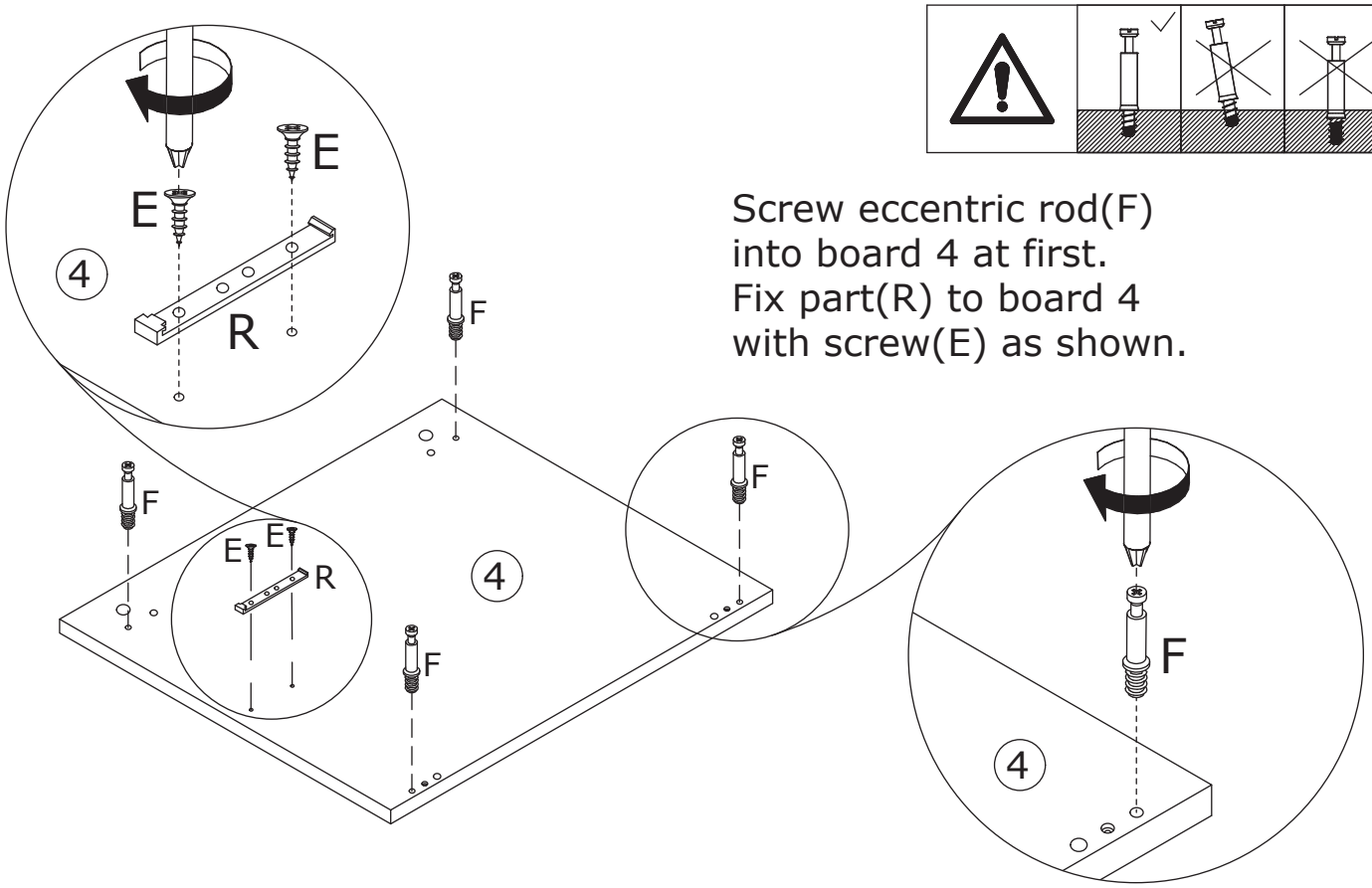

Screw eccentric rod(F) into board 4 at first.
Fix part(R) to board 4 with screw(E) as shown.

16

U x 1	

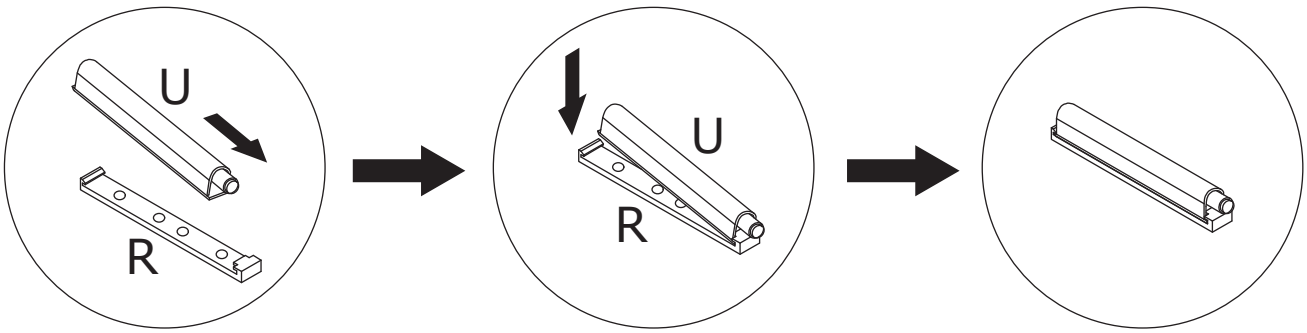

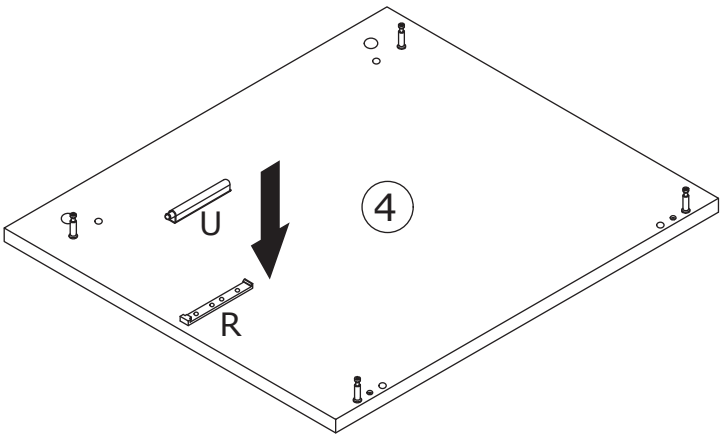

17

E x 2	J x 1	
∅3 x 12 mm	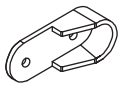	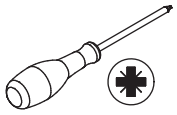

Fix part(J) to board 6
with screw(E) as shown.

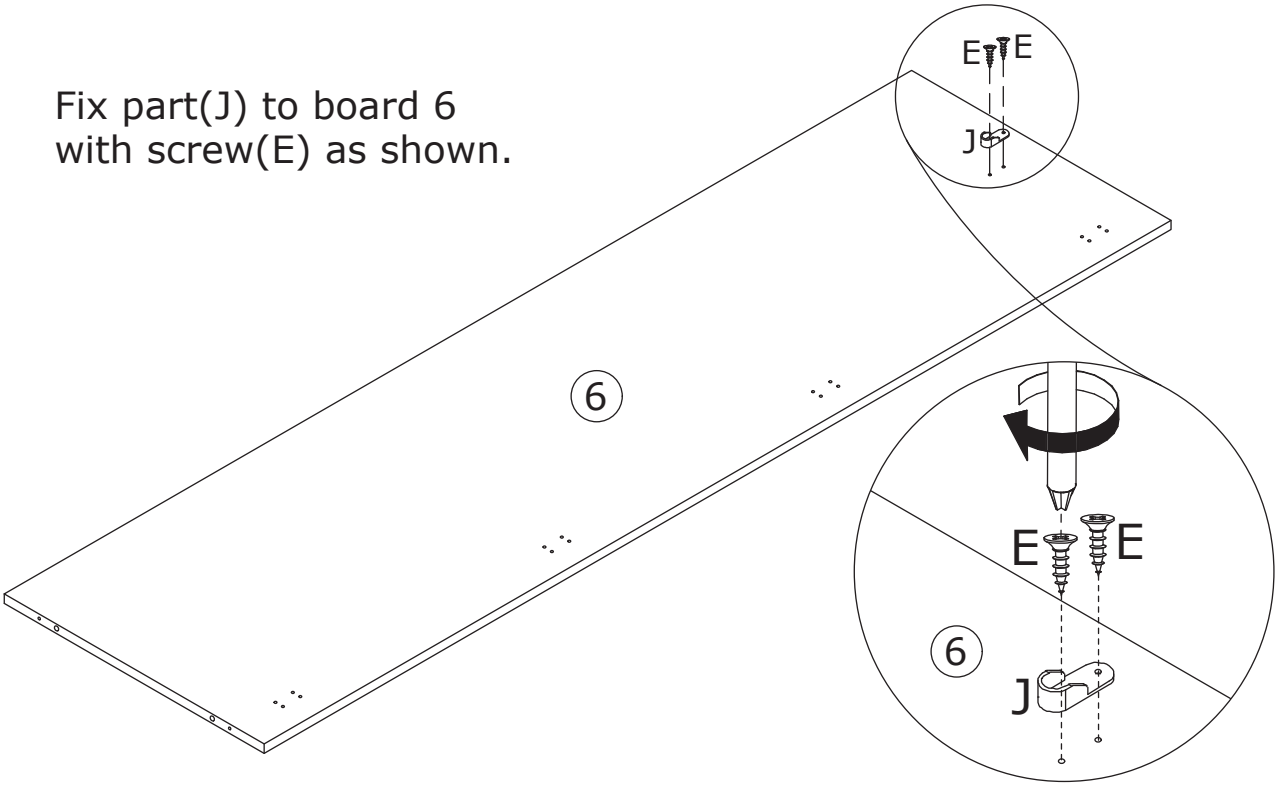

18

G x 4	K x 4	
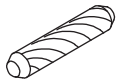 ∅8 x 30 mm	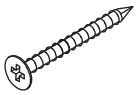 ∅4 x 35 mm	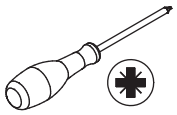

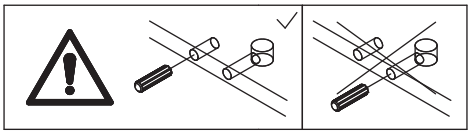

Connect board 2 and 4 to board 6
using wooden dowel(G), and fix with
screw(K) as shown.

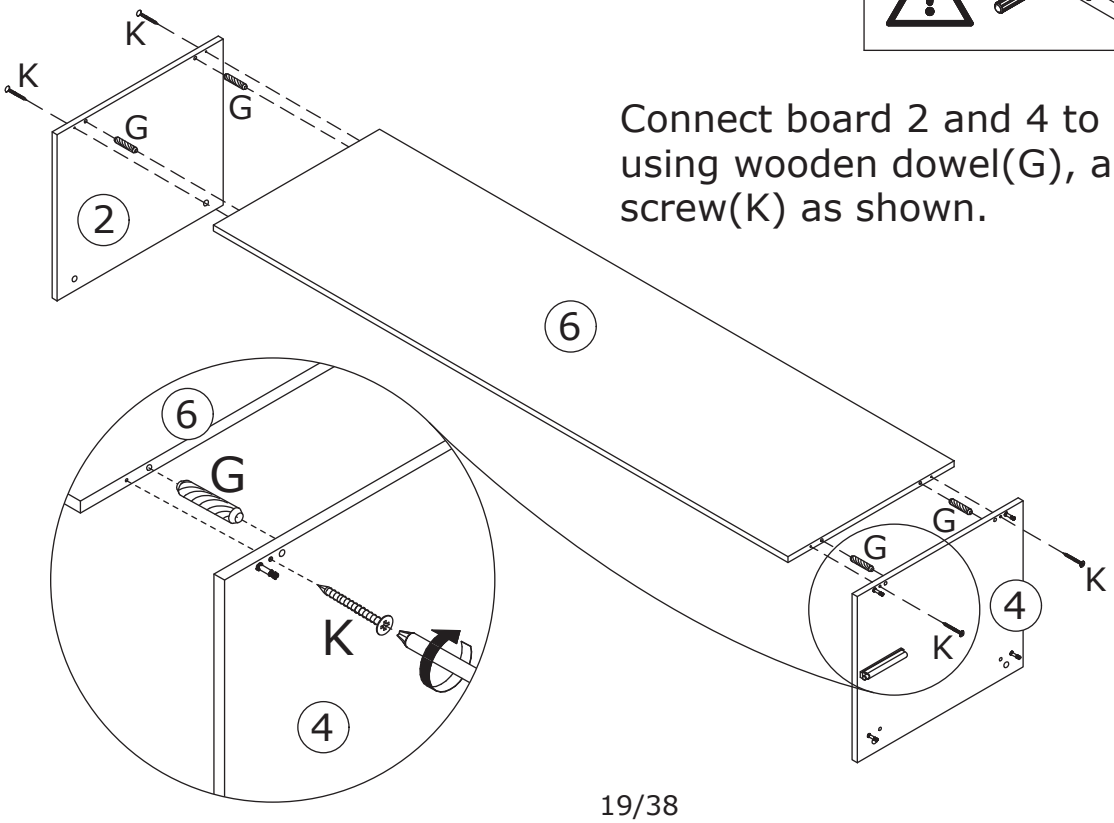

19

A x 1	B x 1	E x 6	
CL L = 350 mm	CR L = 350 mm	∅3 x 12 mm	

Fix rail(A) and (B) to board 10 and 15 with screw(E) as shown.

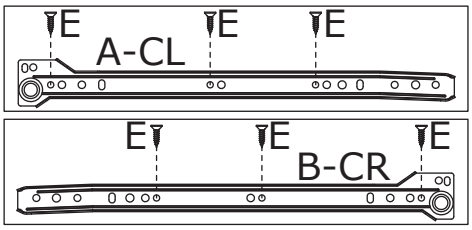

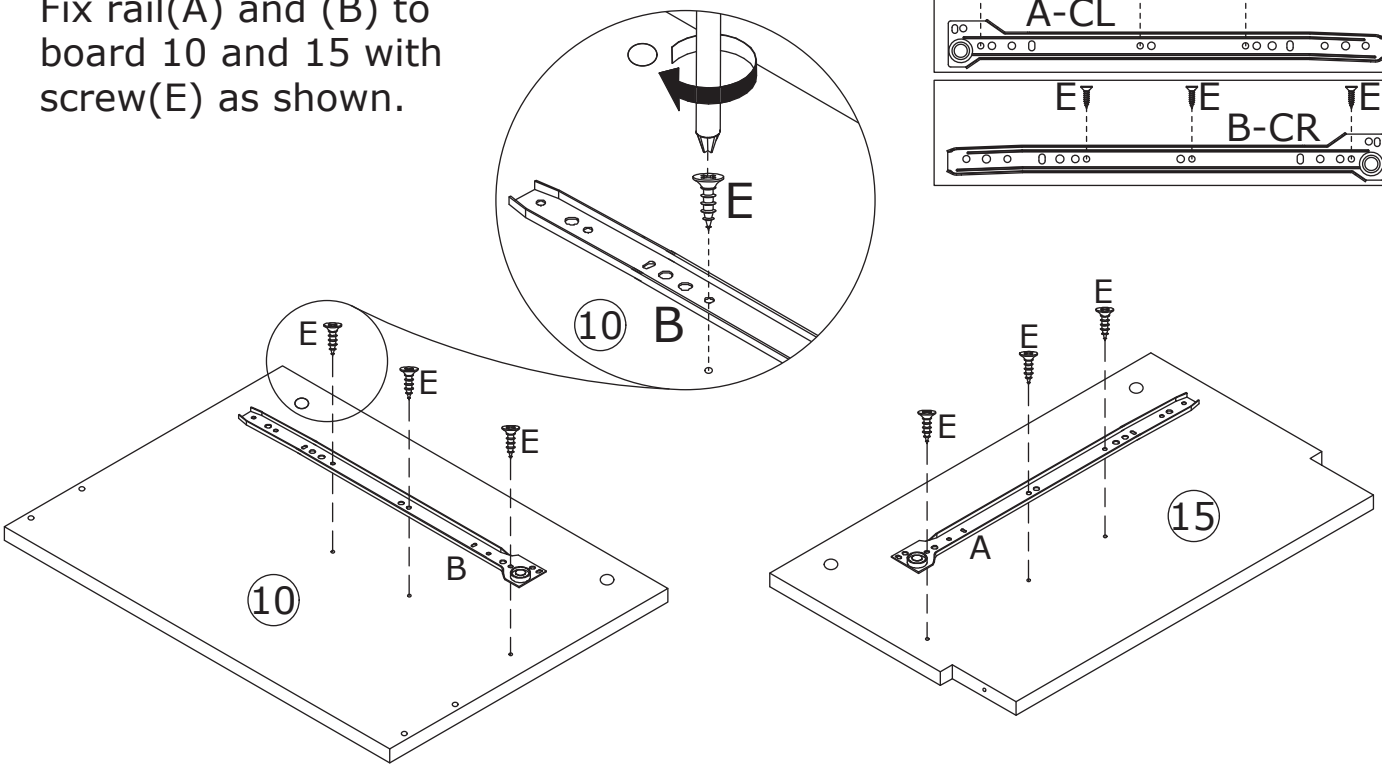

20

F x 4	
∅6 x 35 mm	

Screw eccentric rod(F) into board 10 at first.

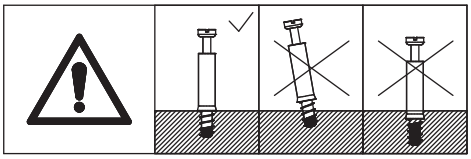

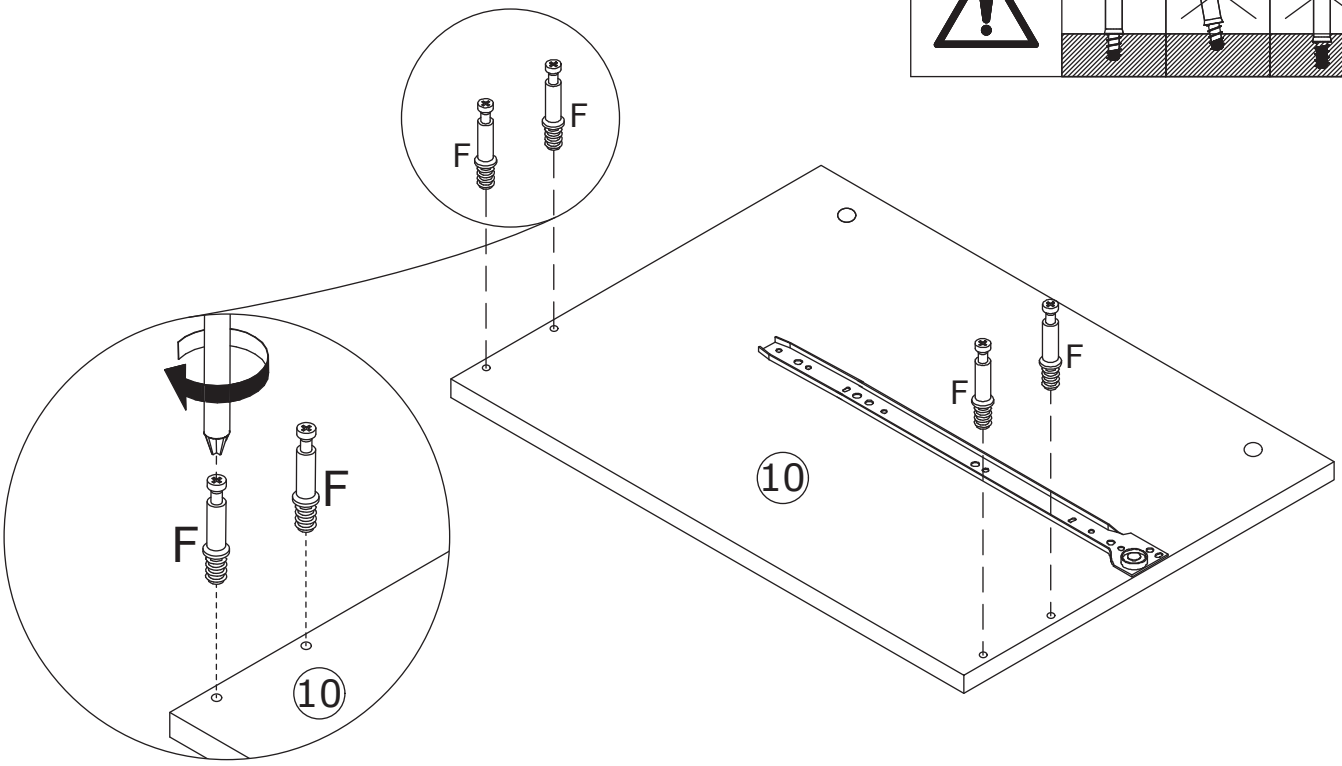

21

G x 4	H x 4	
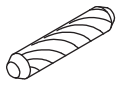		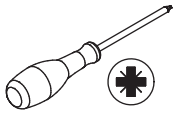
∅8 x 30 mm	∅15 x 10 mm	

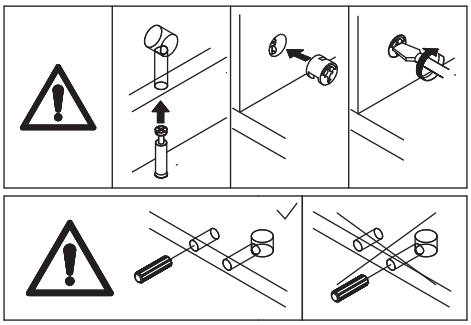

Attach board 10 and 15 to board 4 using wooden dowel(G), add cam lock(H) into and turn clockwise to tighten as shown.

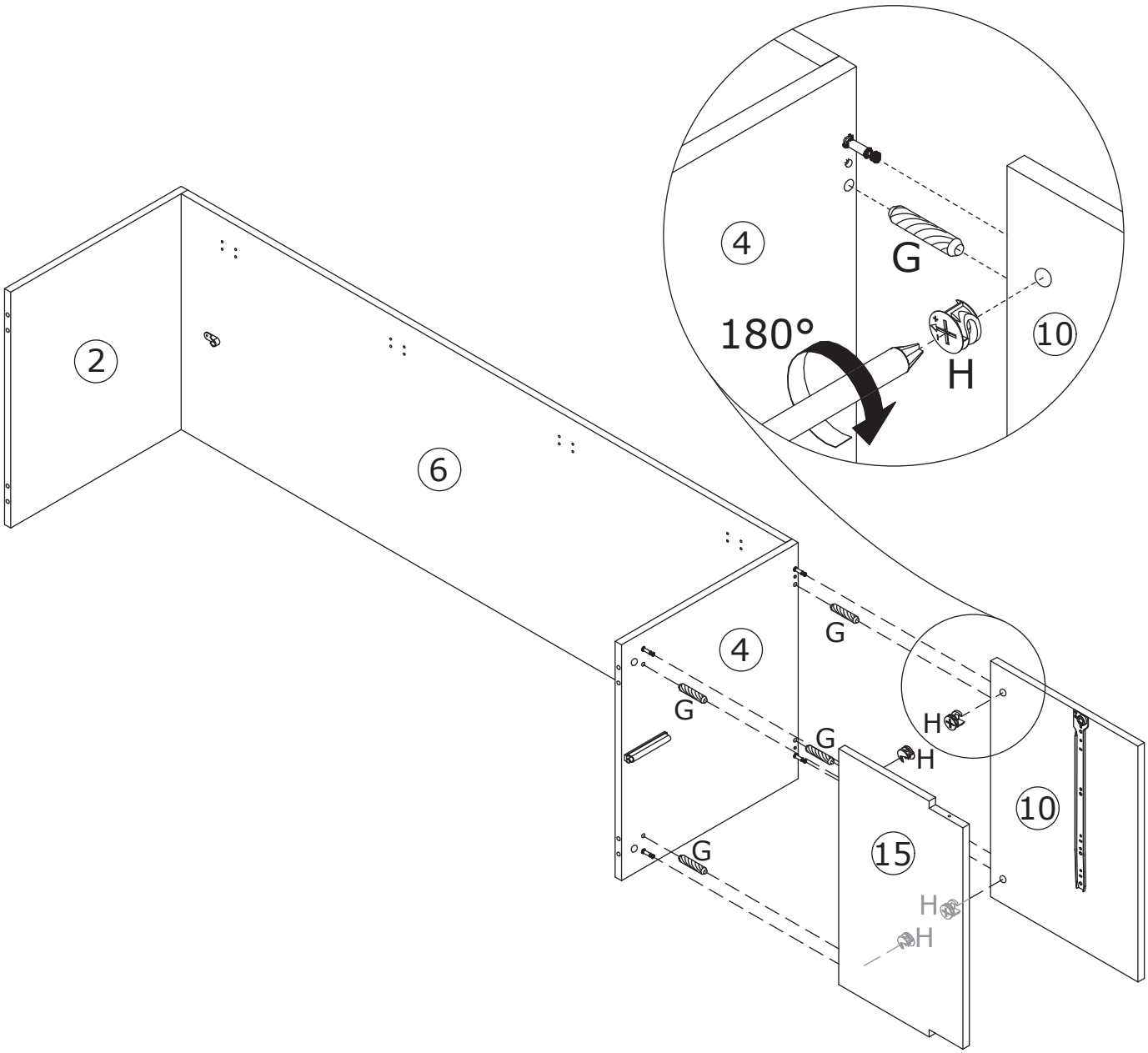

22

G x 4	H x 8	
∅8 x 30 mm	∅15 x 10 mm	

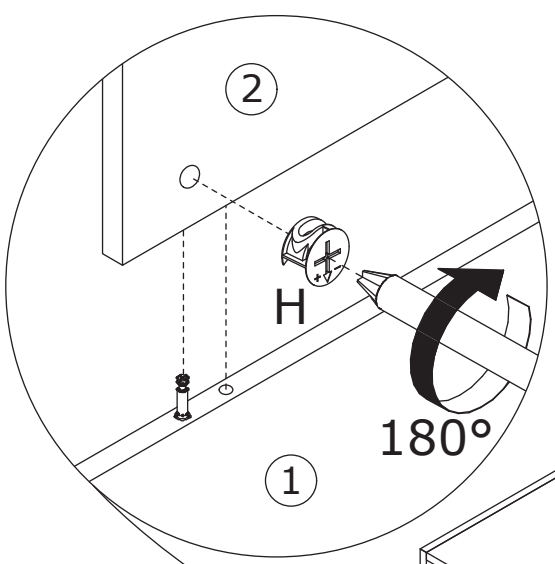

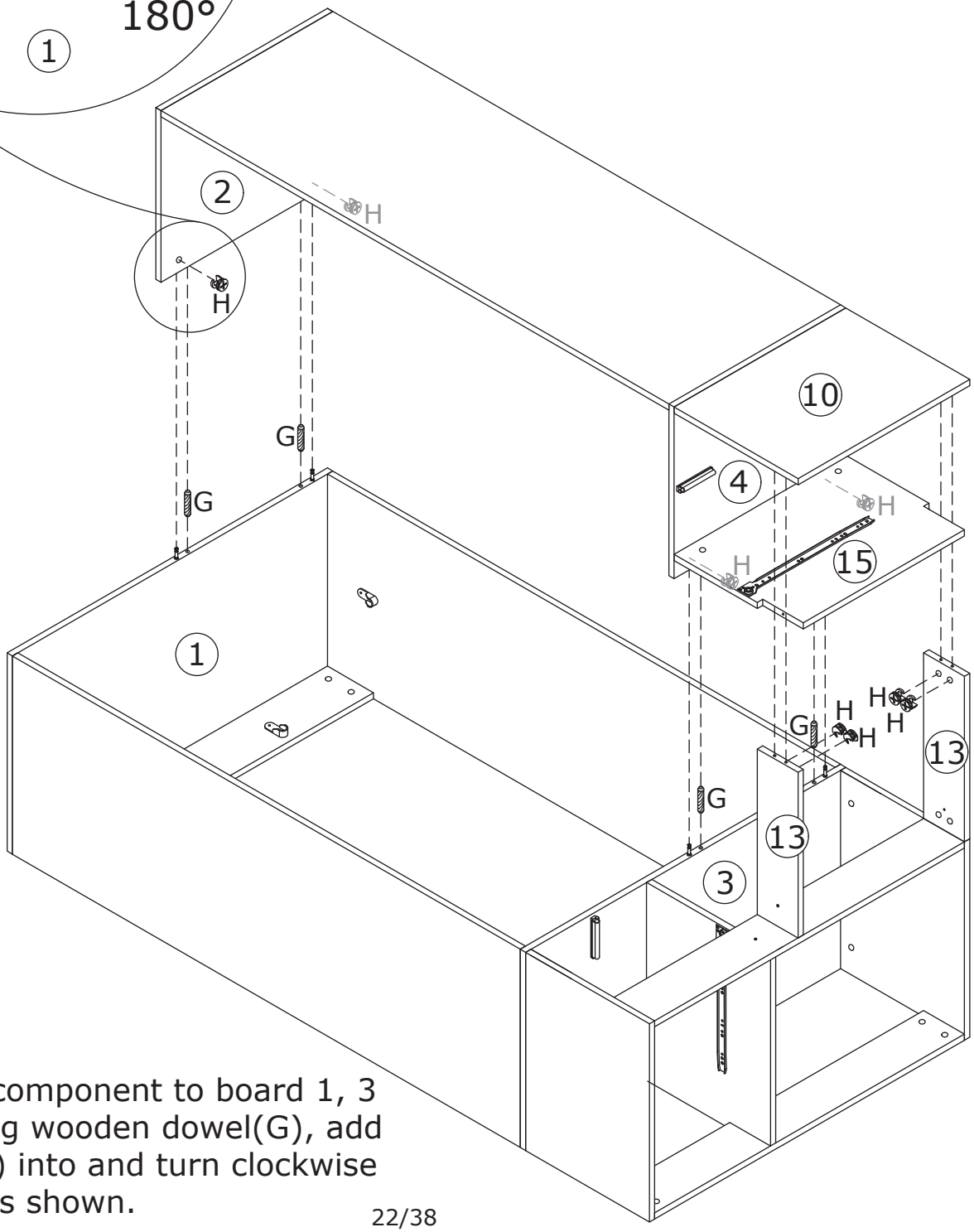

Attach the component to board 1, 3 and 13 using wooden dowel(G), add cam lock(H) into and turn clockwise to tighten as shown.

23

K x 2

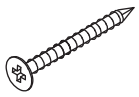

∅4 x 35 mm

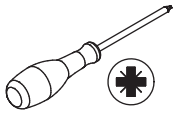

Fix board 13 to board 15 with screw(K) as shown.

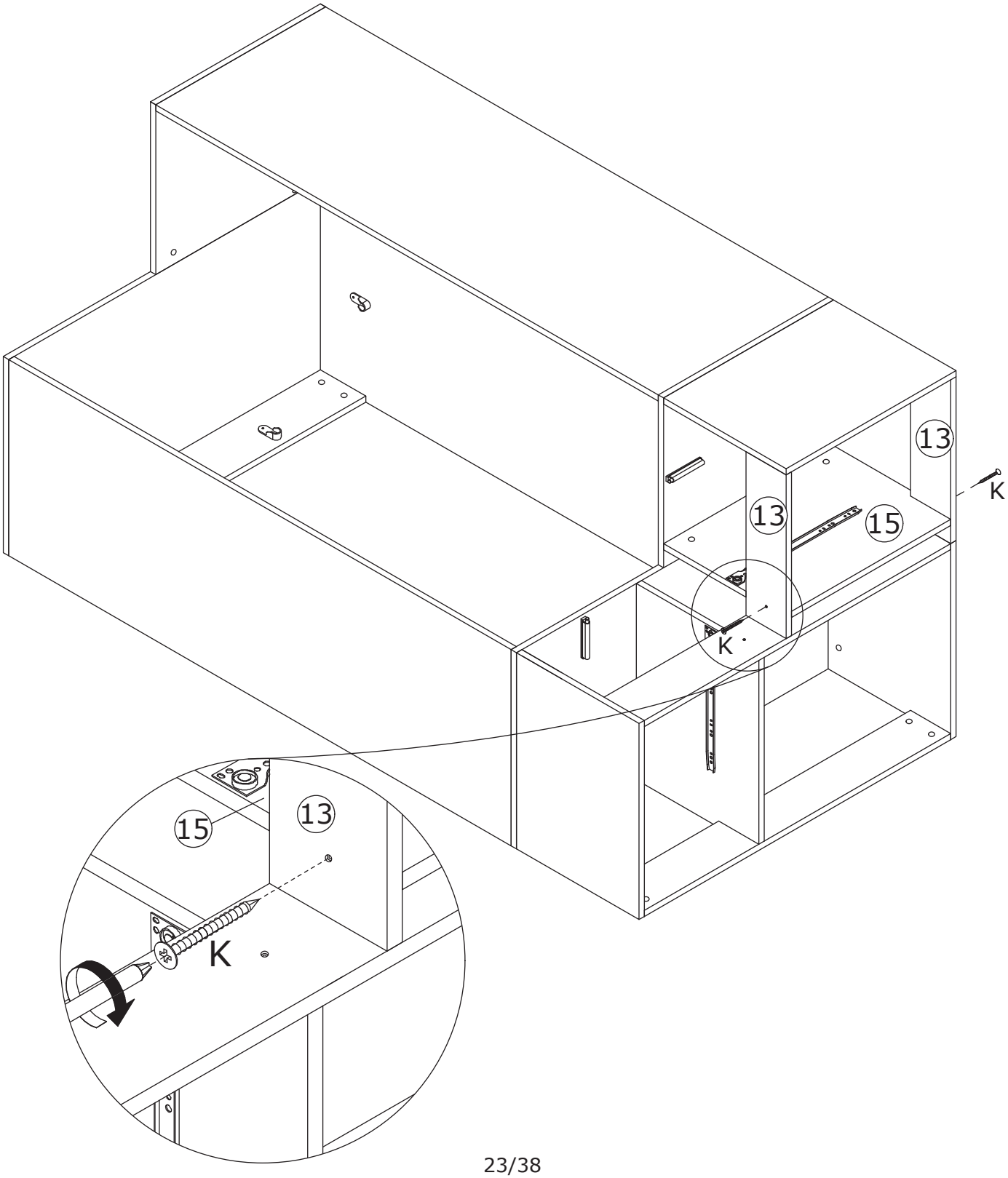

24

Connect board 22, 23 and strip 31 as shown.
Connect board 24, 25 and strip 30 as shown.

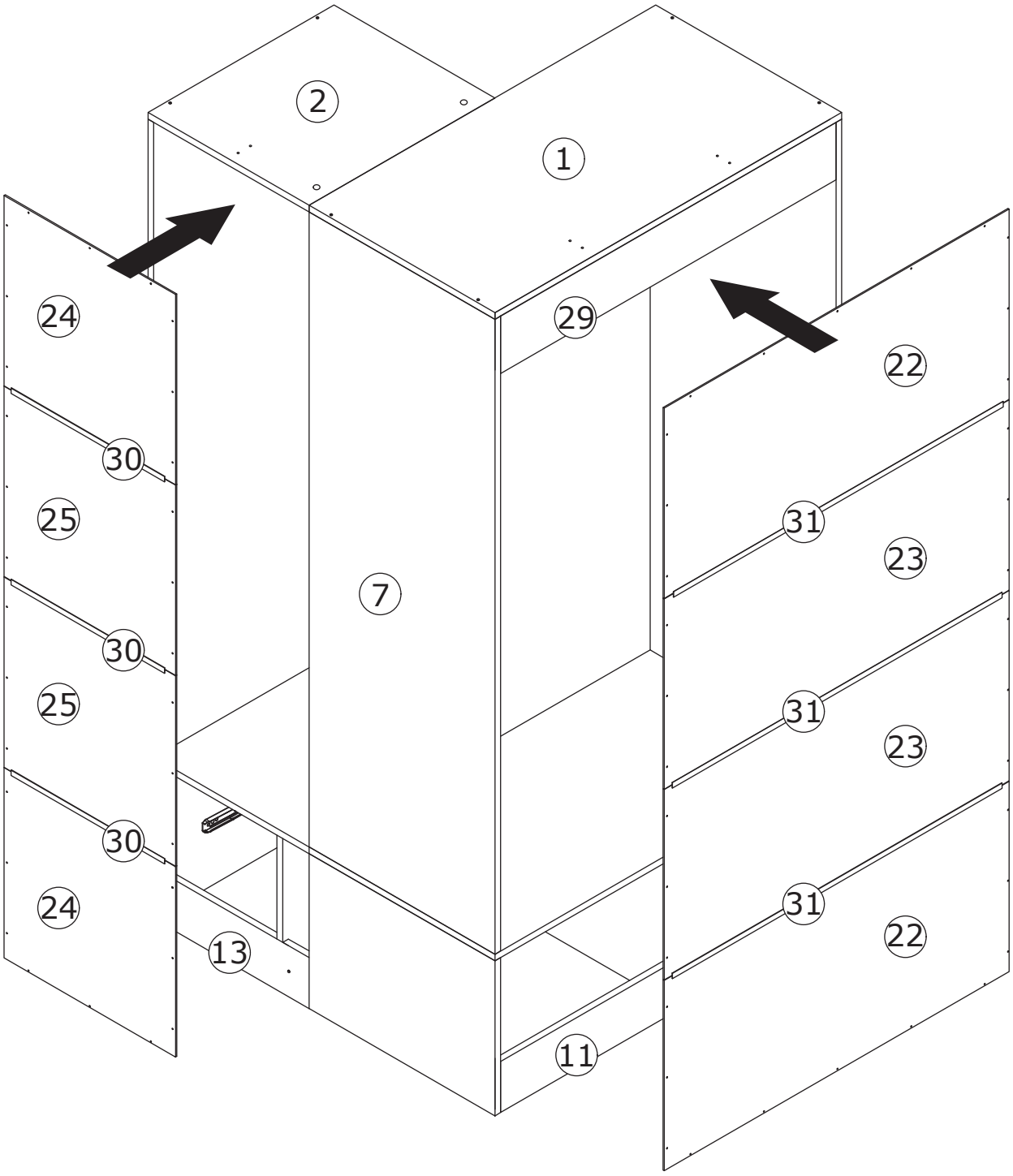

25

L x 64

∅3 x 12 mm

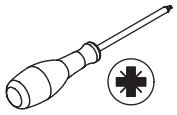

Fix back boards using nail(L) as shown.

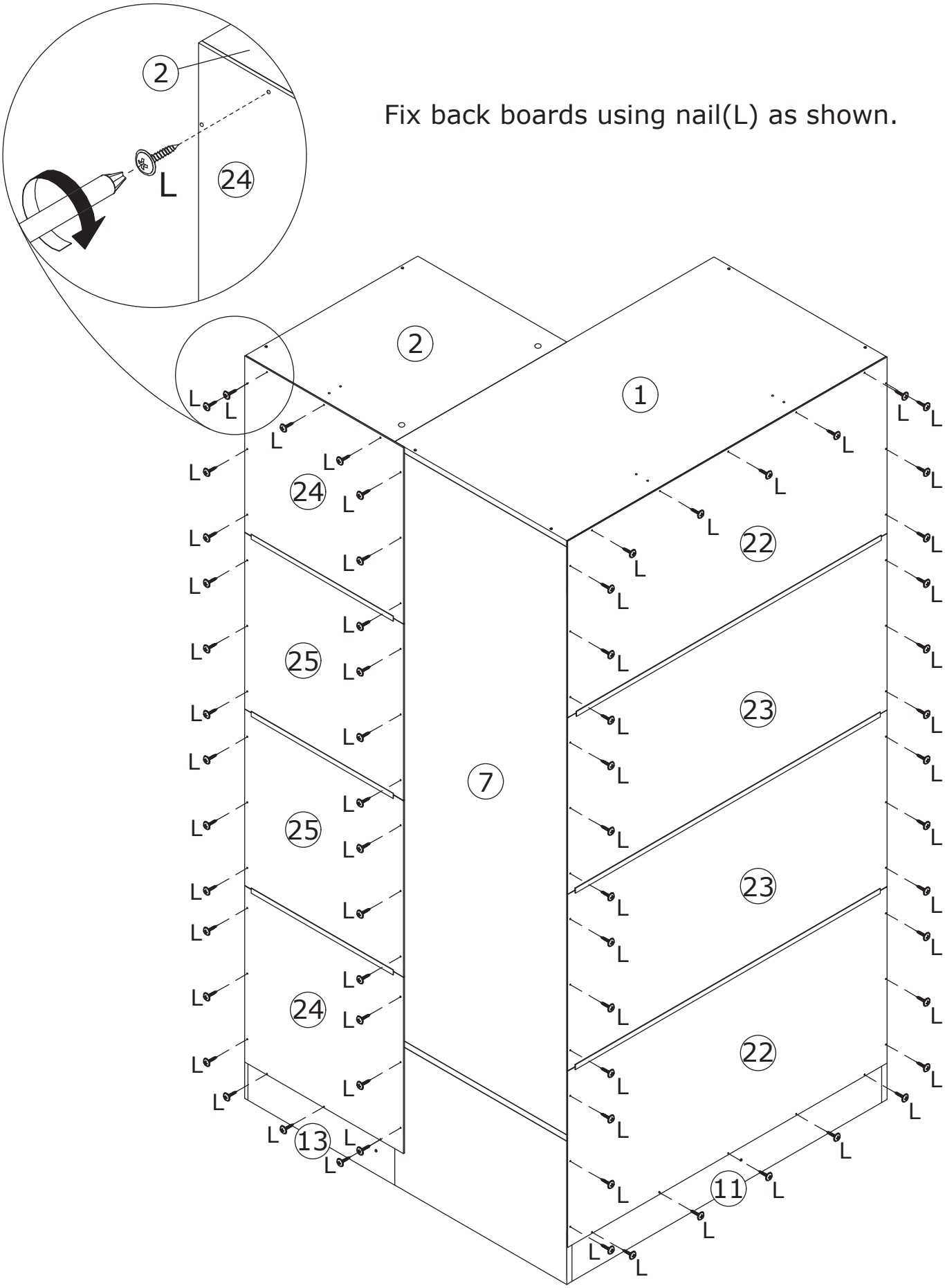

26

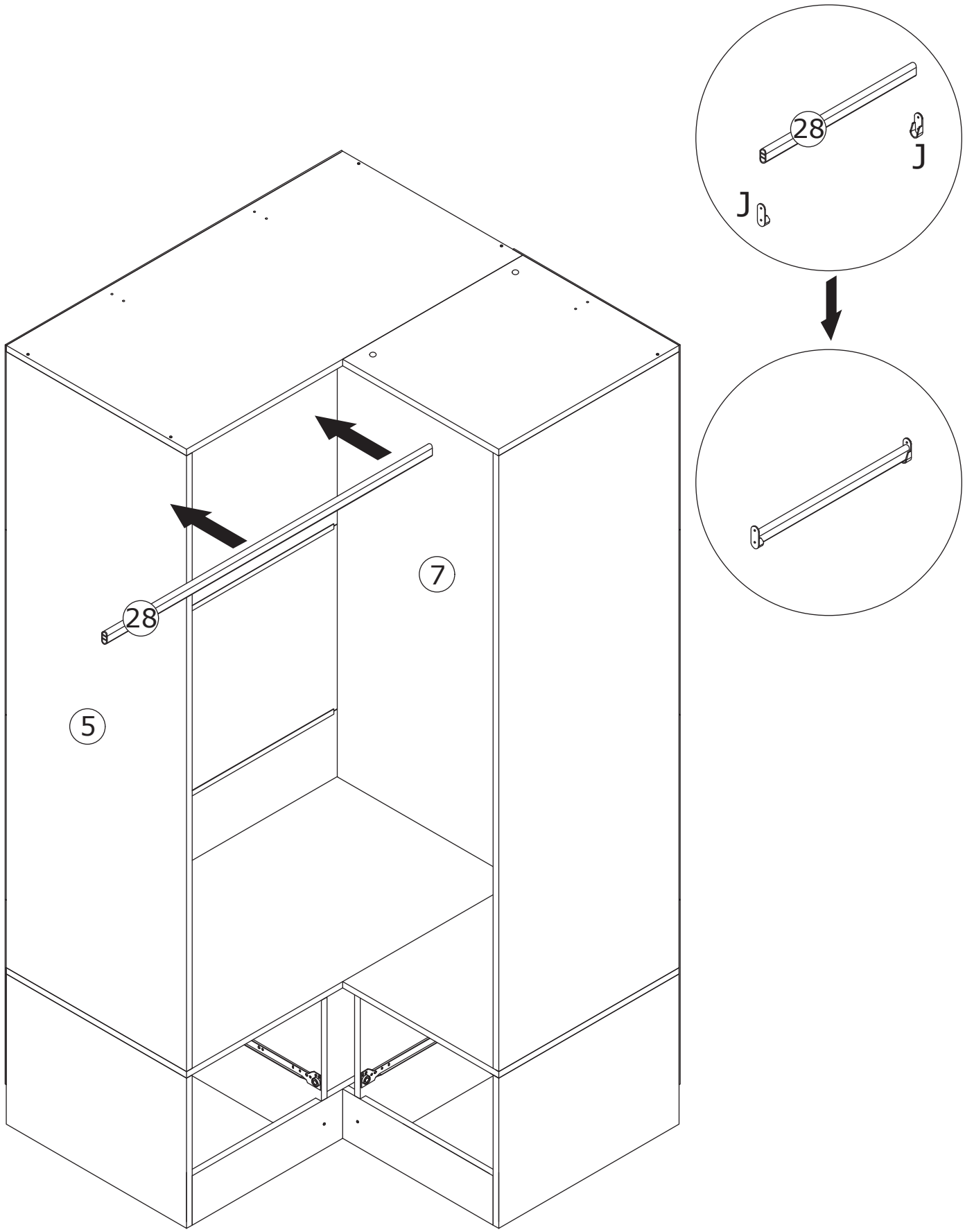

27

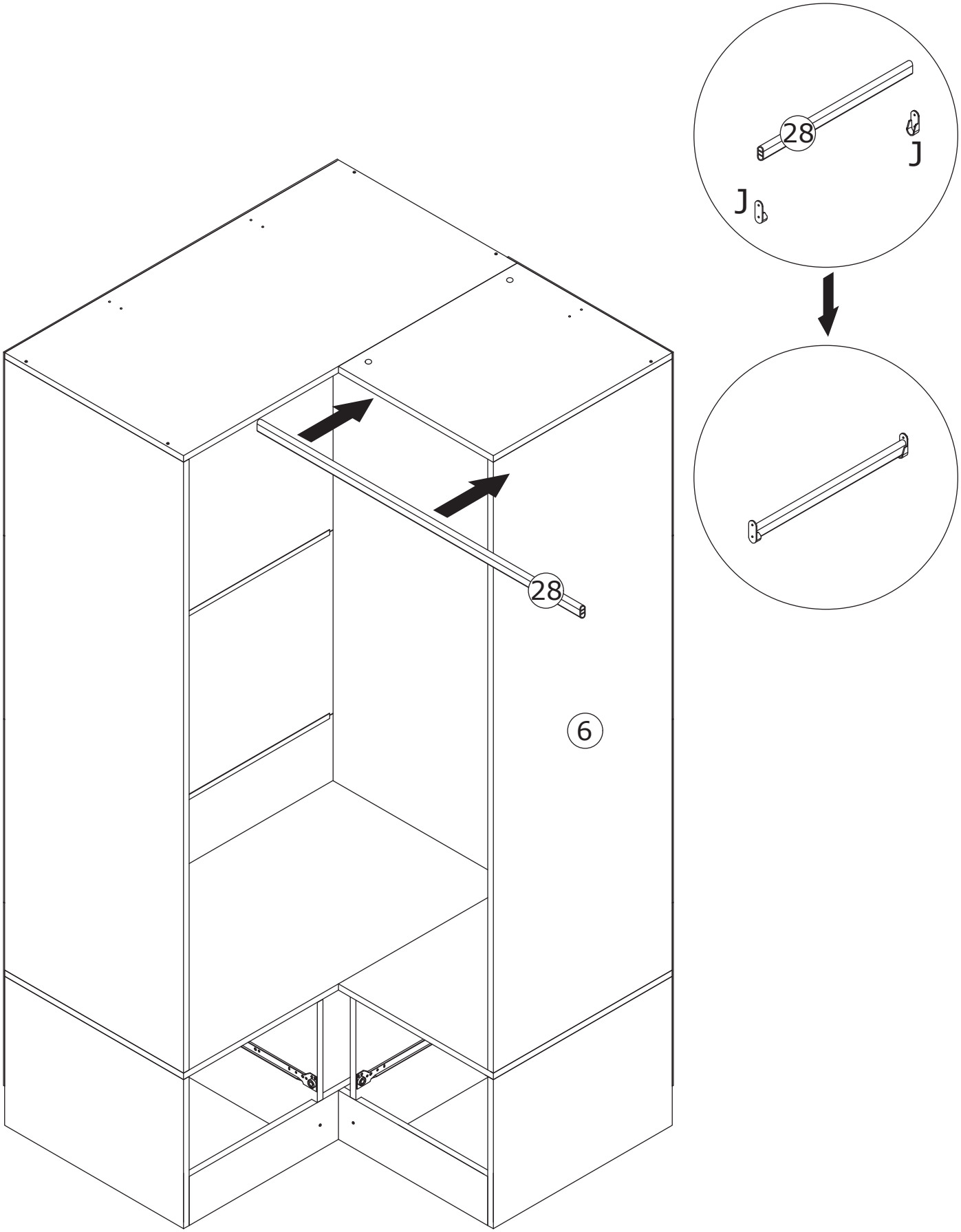

28

M x 8	P x 16	Q x 1	X x 2	
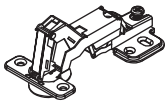	∅4 x 14 mm	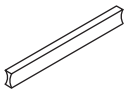 L = 128mm	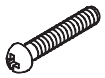 ∅4 x 18 mm	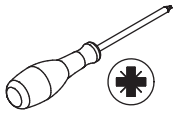

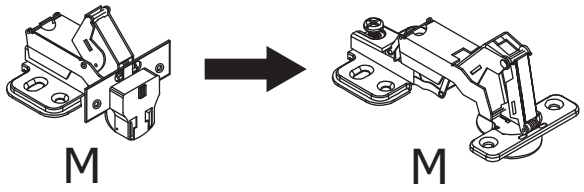

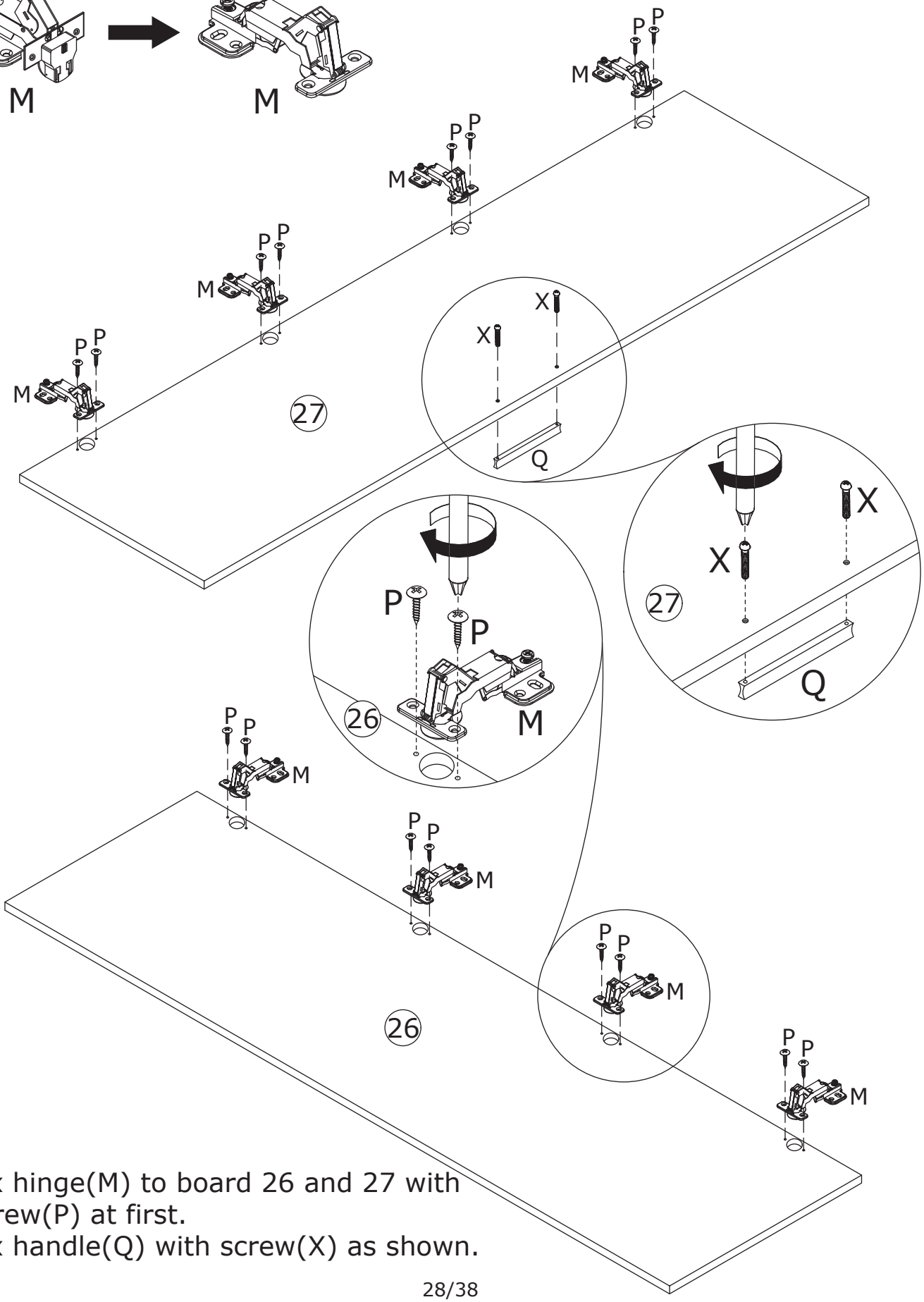

Fix hinge(M) to board 26 and 27 with screw(P) at first.
Fix handle(Q) with screw(X) as shown.

29

P x 16

∅4 x 14 mm

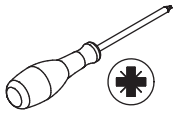

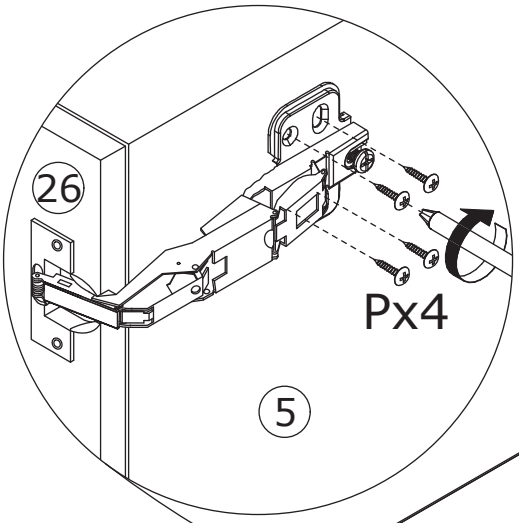

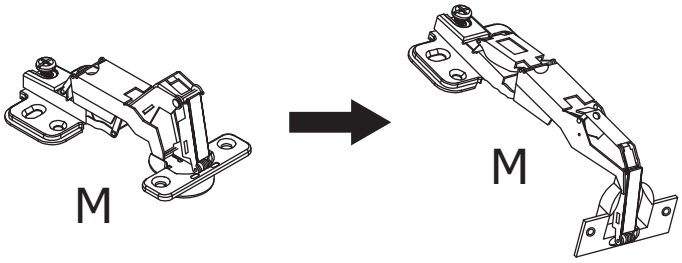

Assemble door 26 to board 5 by fixing hinge with screw(P) as shown.

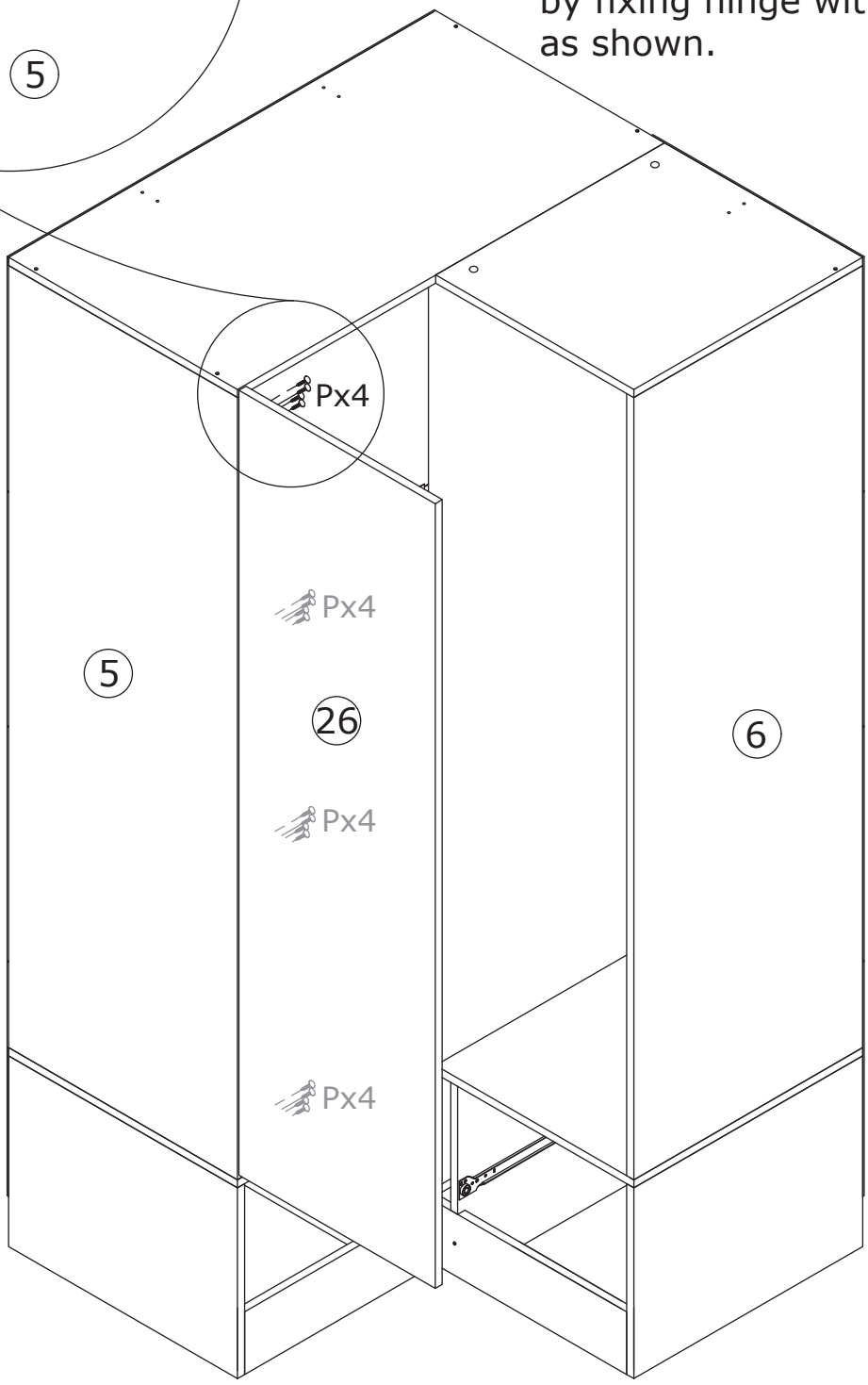

30

P x 16

∅4 x 14 mm

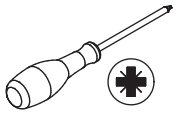

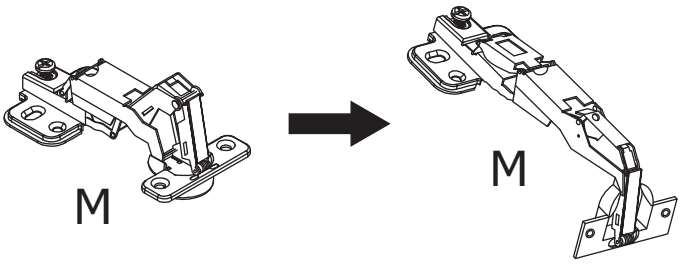

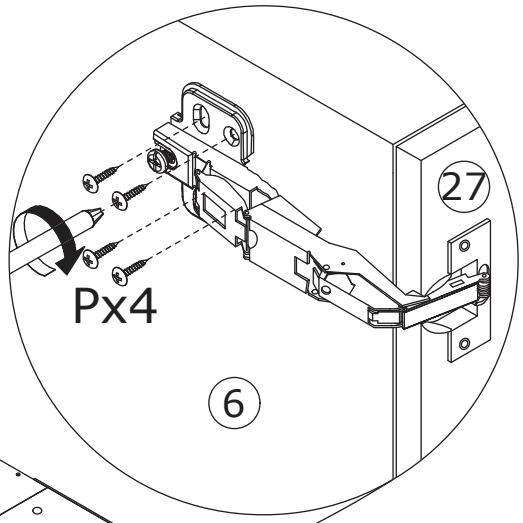

Assemble door 27 to board 6 by fixing hinge with screw(P) as shown.

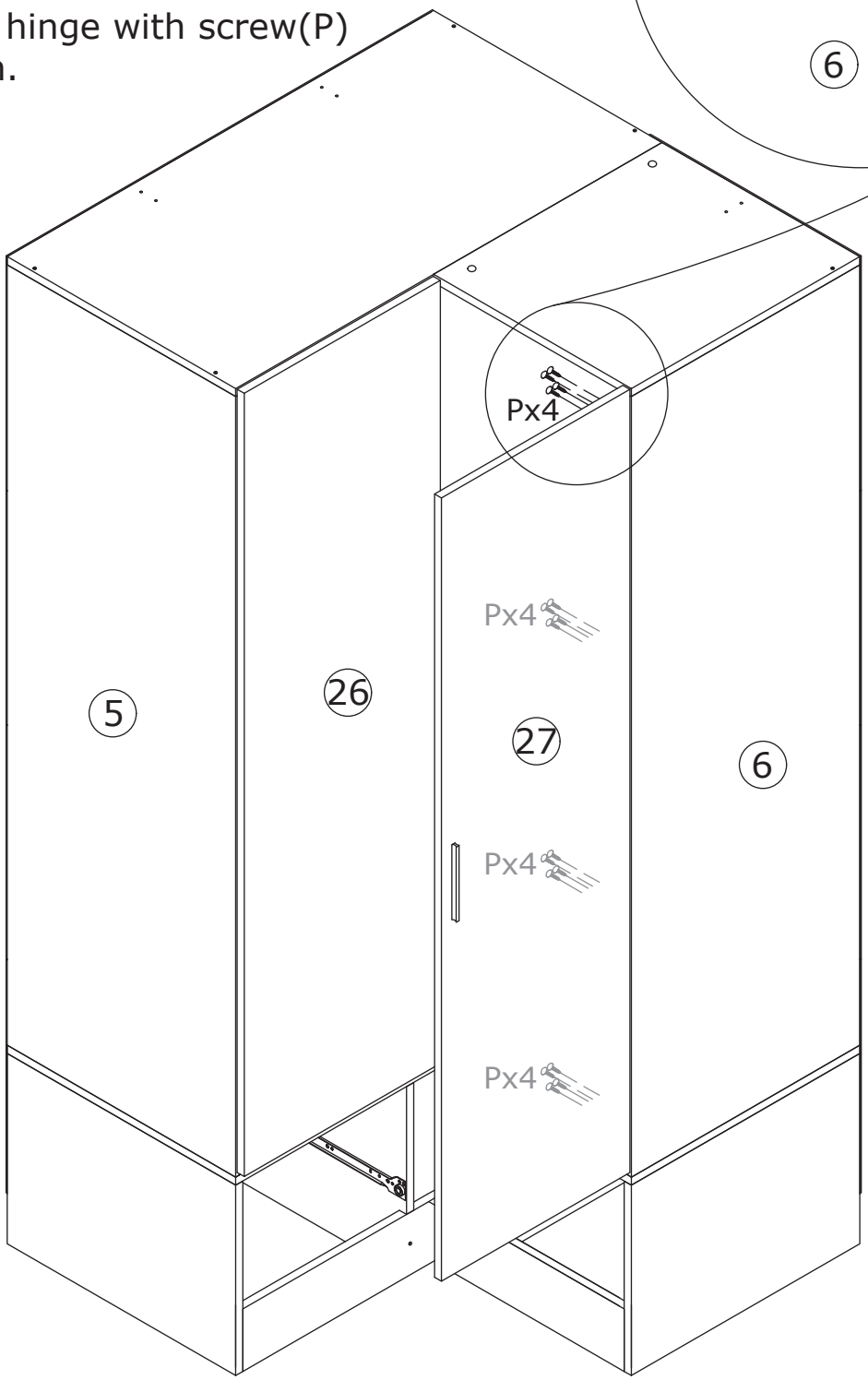

31

F x 8

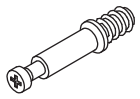

∅6 x 35 mm

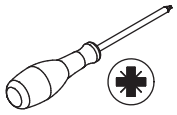

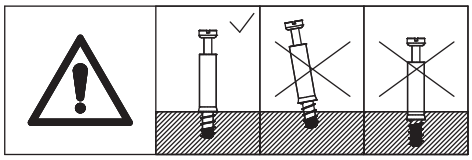

Screw eccentric rod(F) into board 16 and 17 at first.

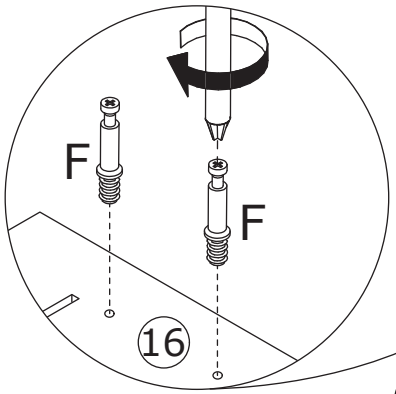

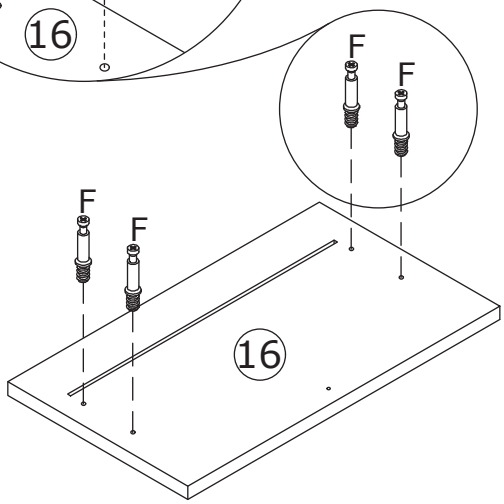

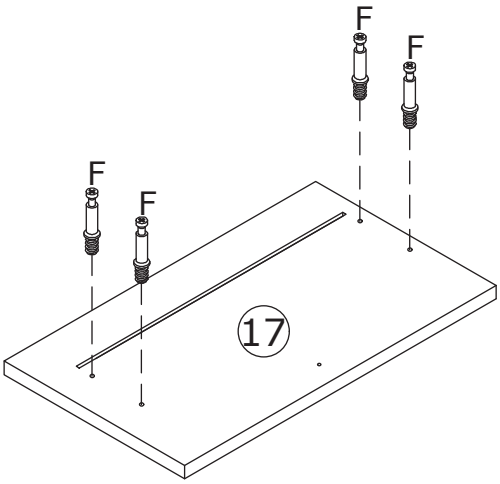

32

H x 8

∅15 x 10 mm

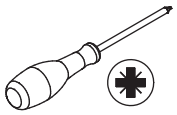

Attach board 18 and 19 to board 16 and 17 respectively, add cam lock(H) into and turn clockwise to tighten as shown.

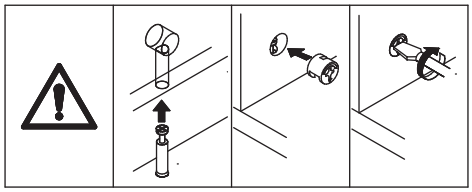

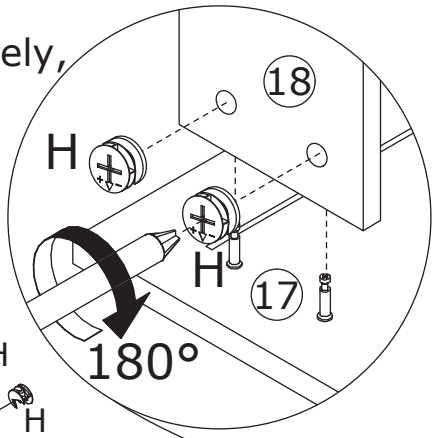

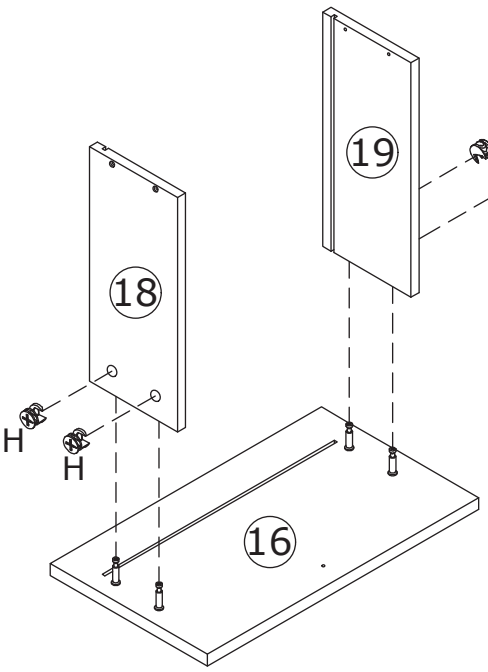

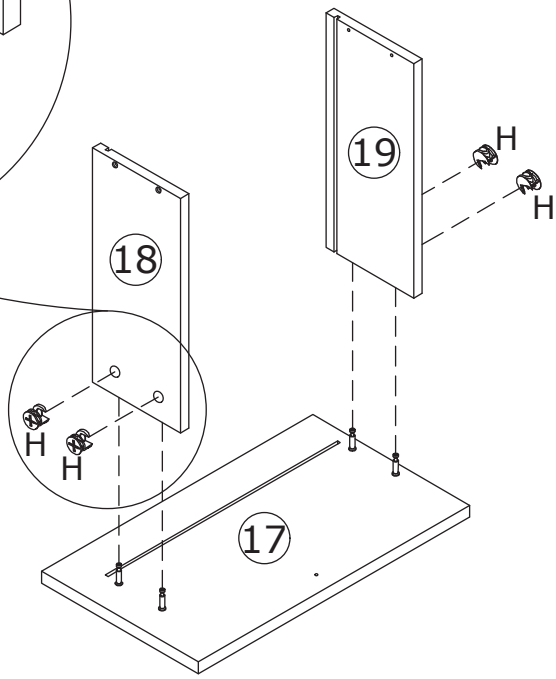

33

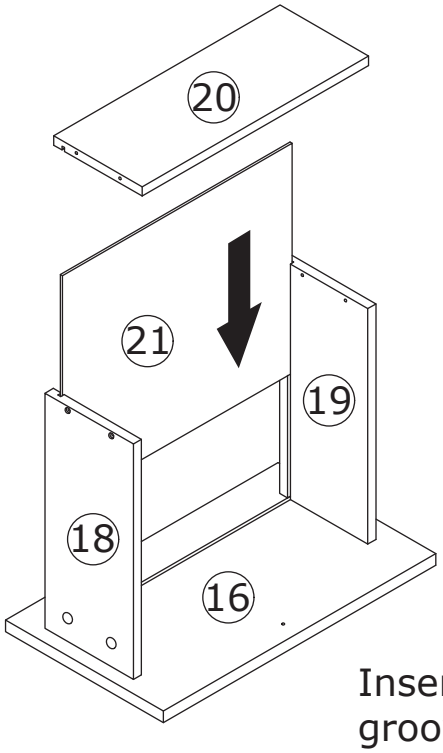

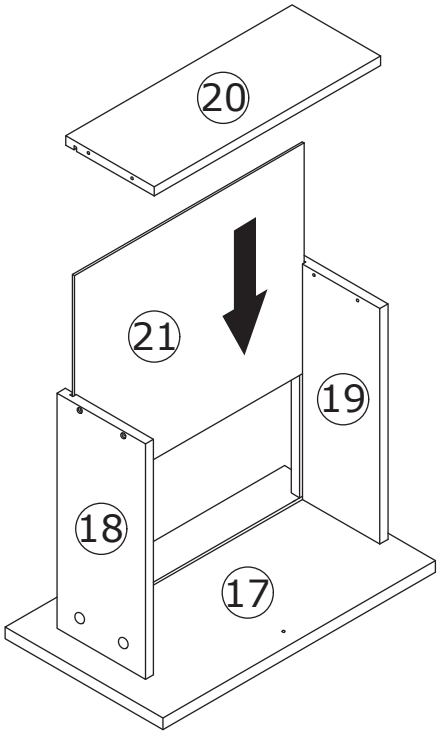

Insert board 21 along grooves as shown.

34

K x 8

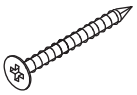

∅4 x 35 mm

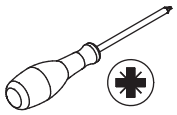

Fix board 20 to board 18 and 19 with screw(K) as shown.

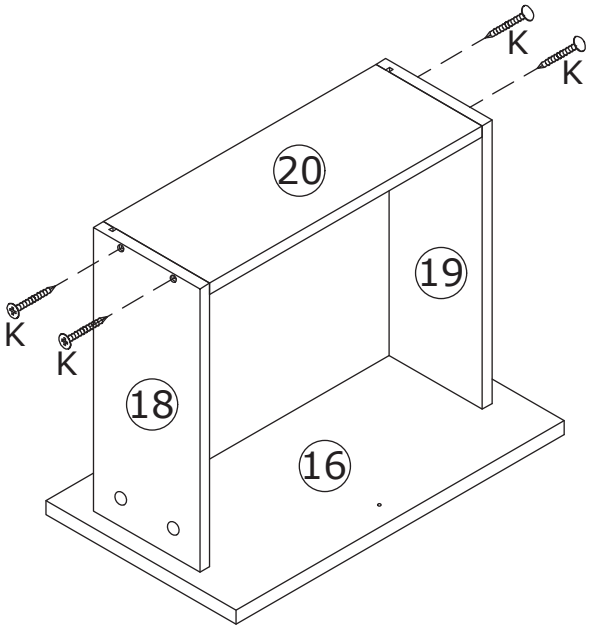

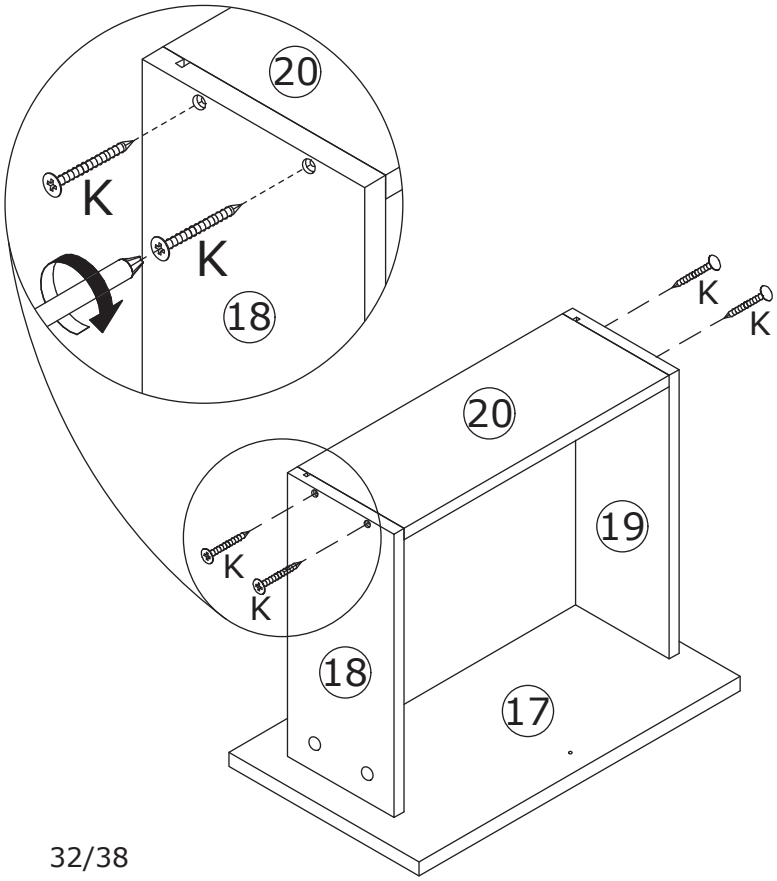

35

E x 2	W x 2	
∅3 x 12 mm		

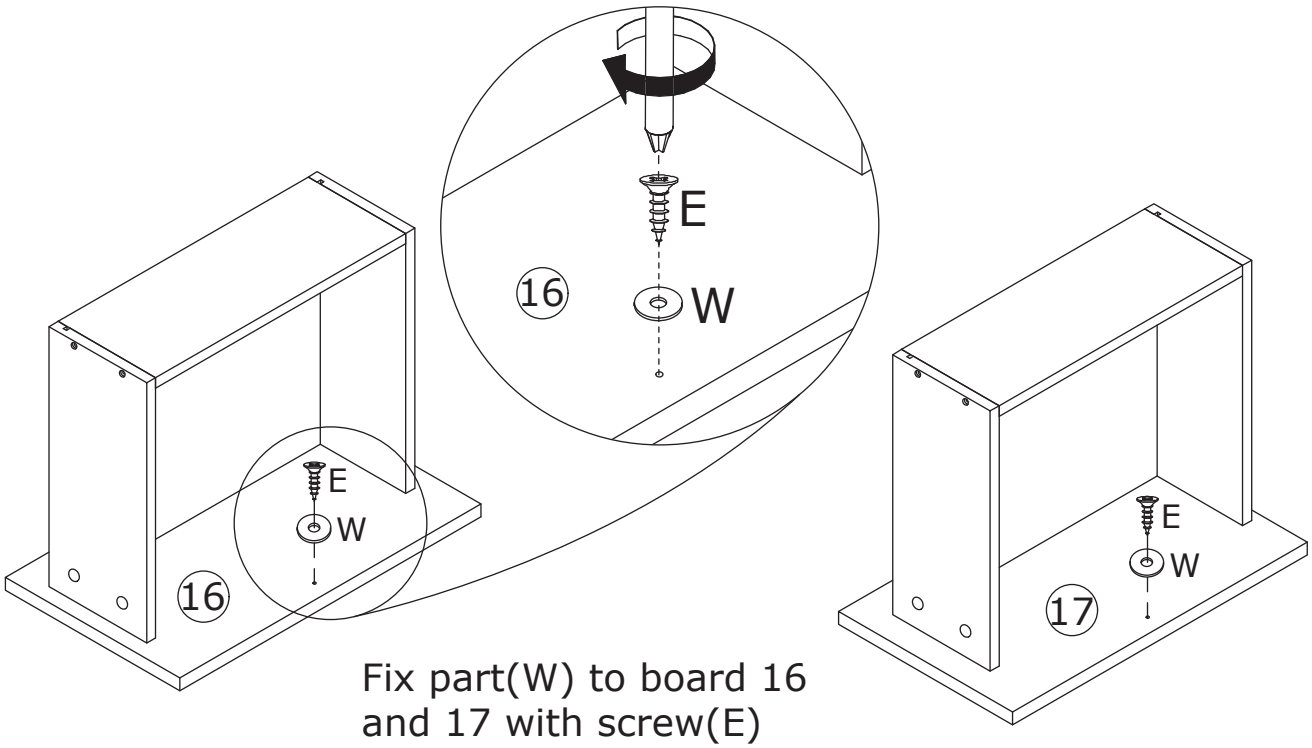

Fix part(W) to board 16 and 17 with screw(E) as shown.

36

C x 2	D x 2	E x 12	
DL L = 350 mm	DR L = 350 mm	∅3 x 12 mm	

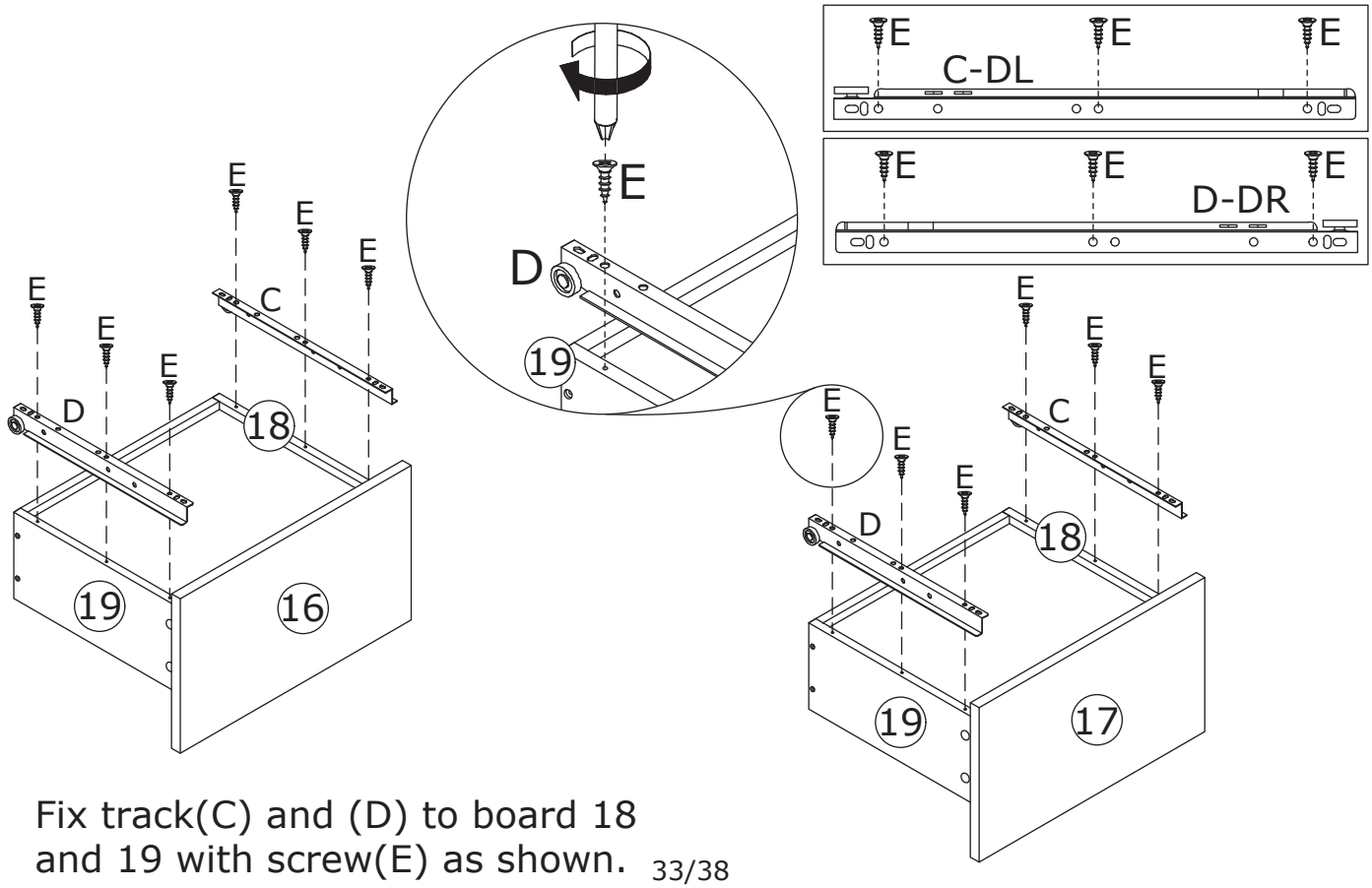

Fix track(C) and (D) to board 18 and 19 with screw(E) as shown.

37

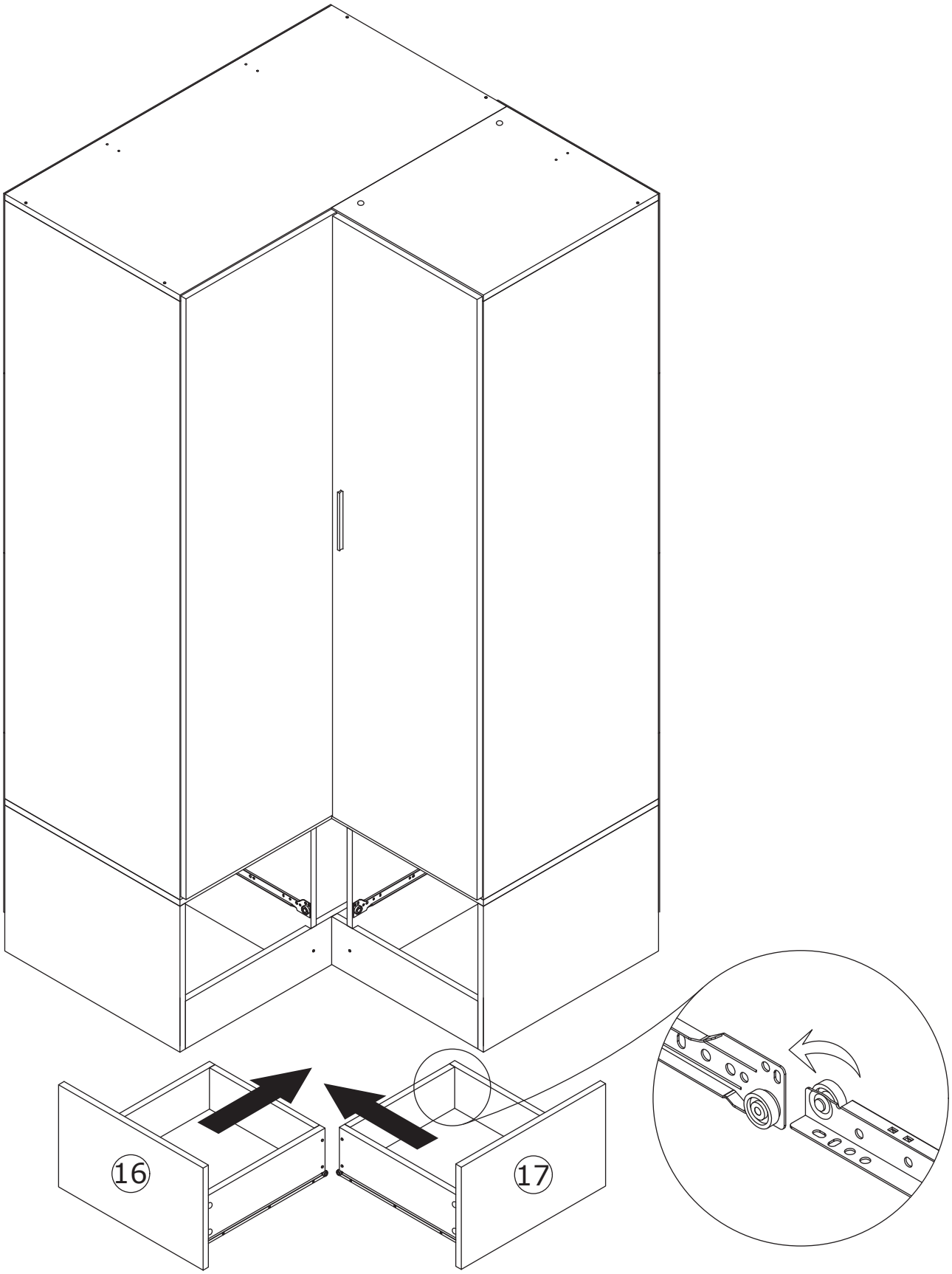

38

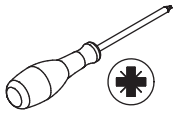

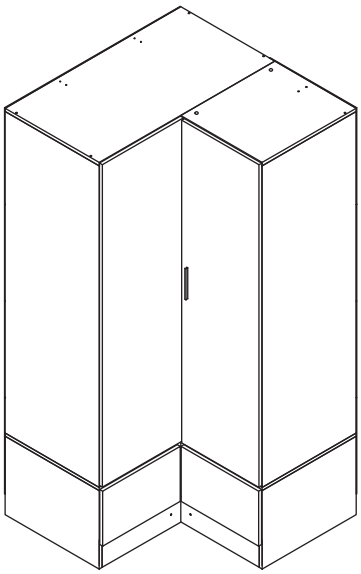

If doors are still not aligned if the hinges
are properly correctly, please watch the video.

https://youtu.be/n0Lb36SoODM

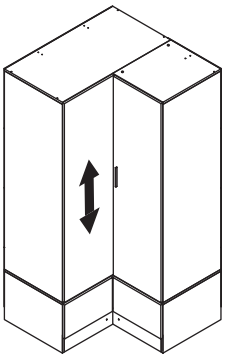

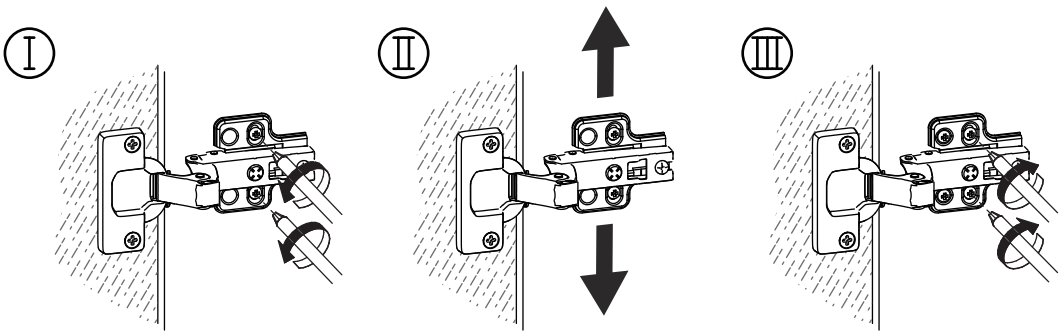

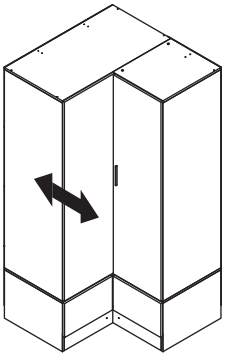

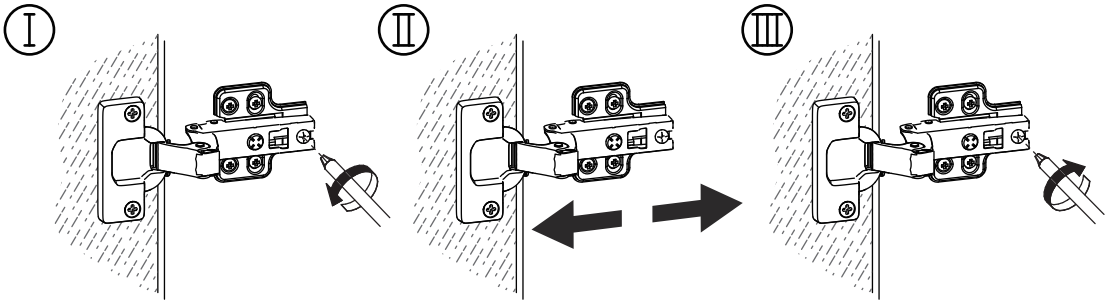

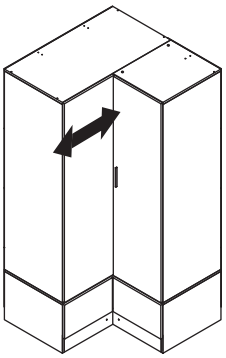

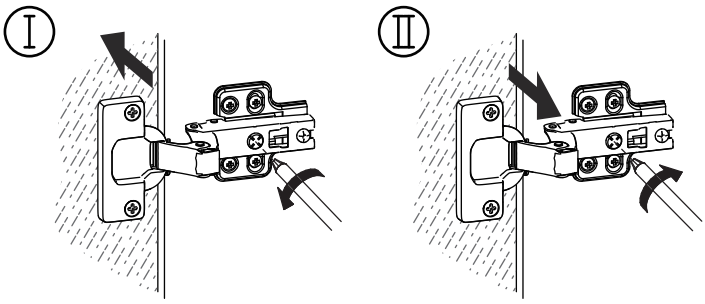

39

S x 2

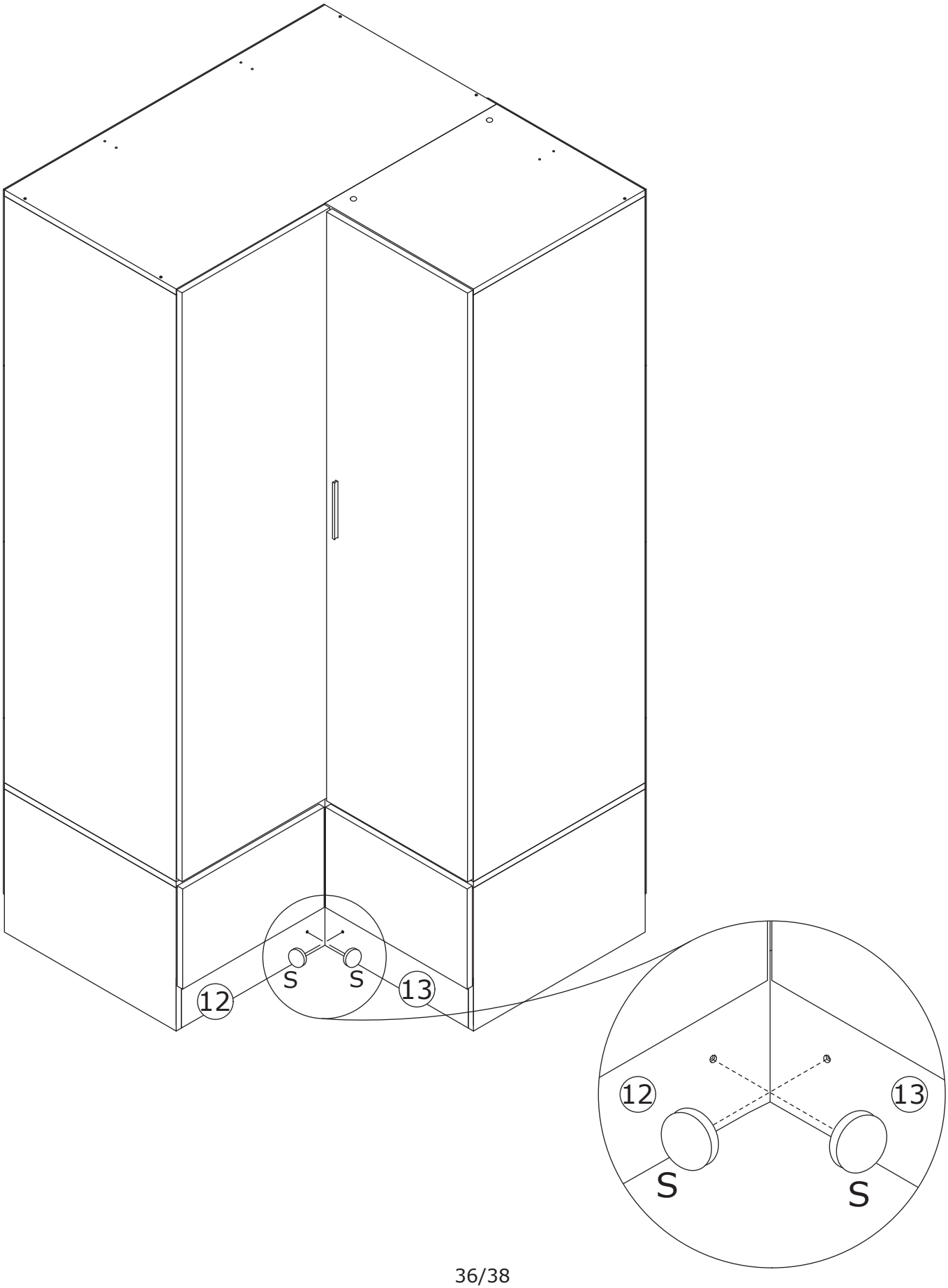

40

P x 6	T x 3	
∅4 x 14 mm	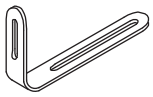	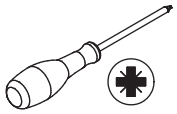

Fix part(T) to board 1 and 2 with screw(P) as shown.

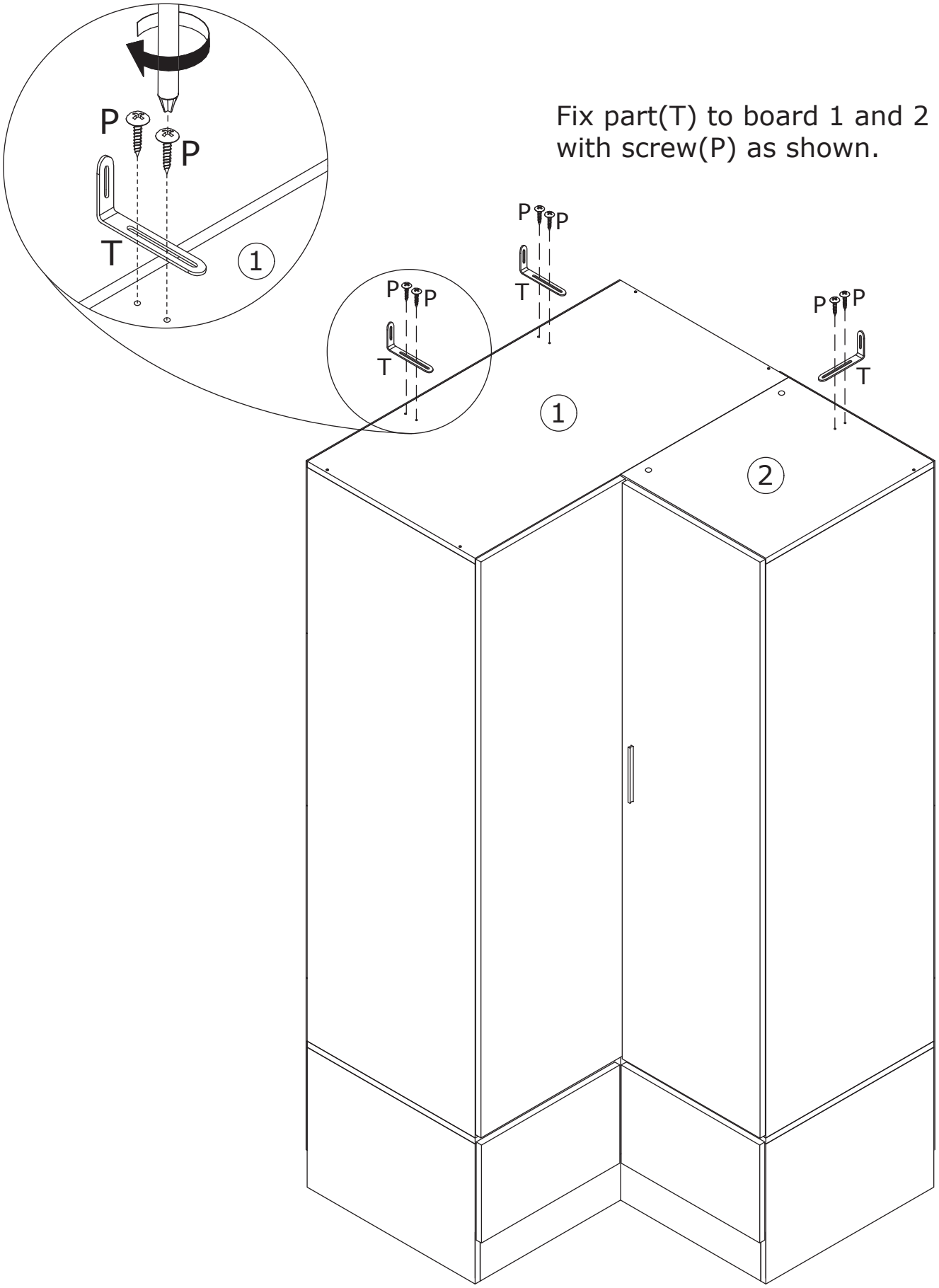

41

N x 3	V x 3	
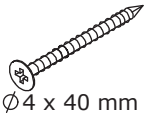 ∅4 x 40 mm	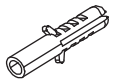	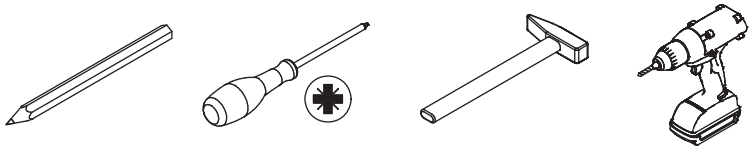

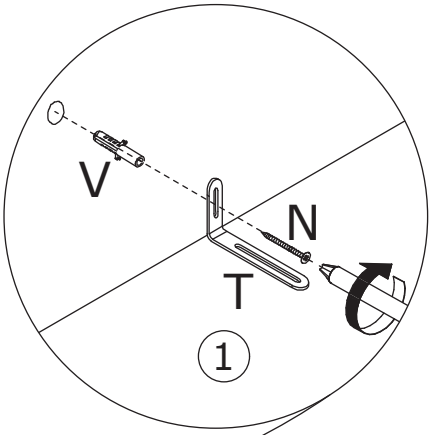

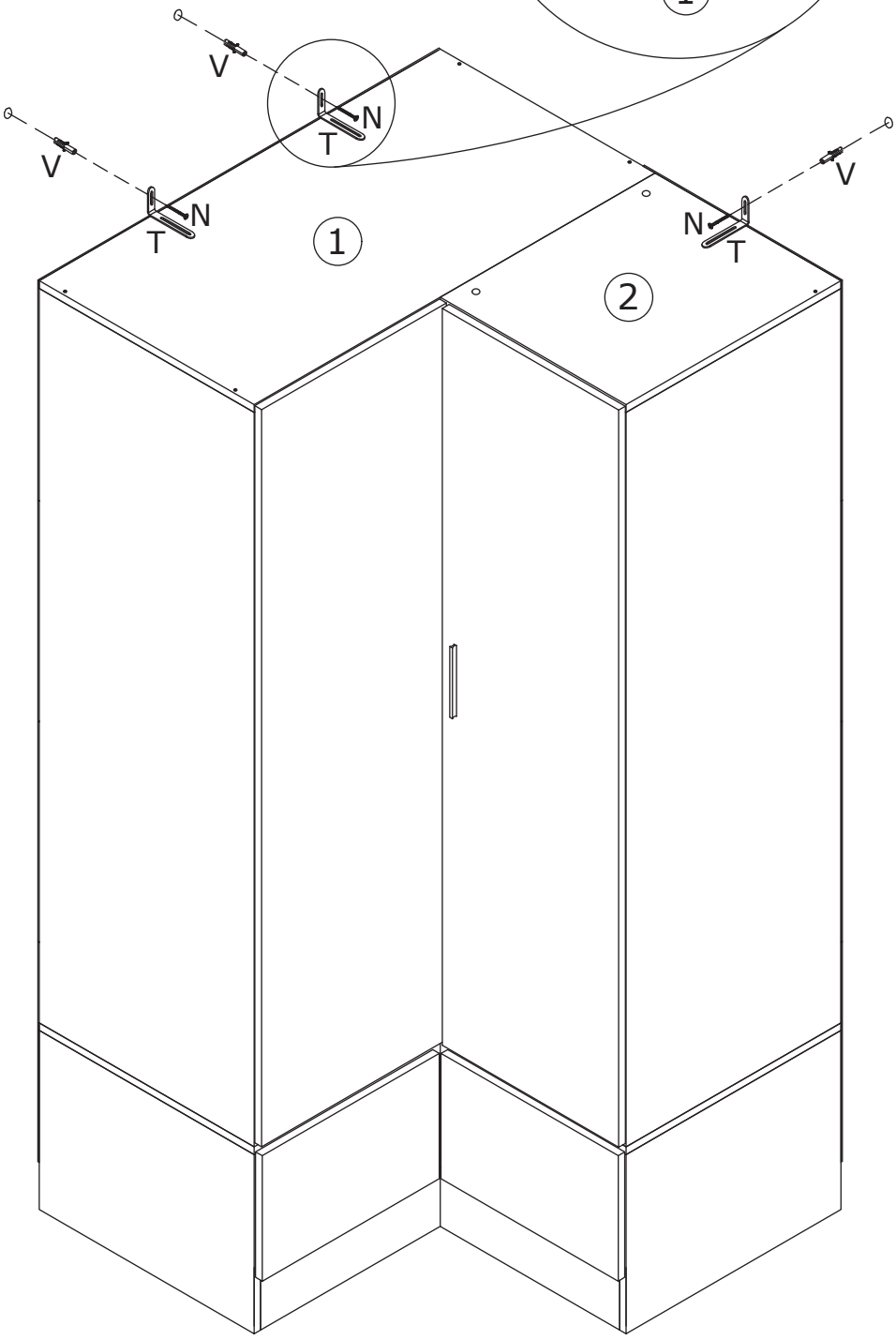

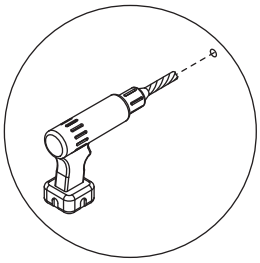

STEP1

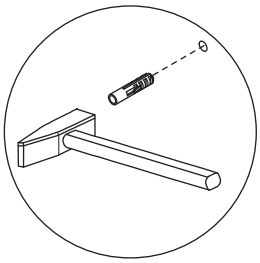

STEP2

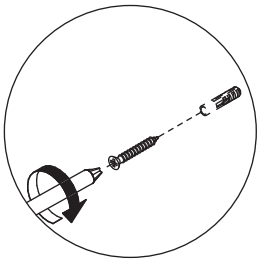

STEP3

Install anti-tipping device as shown.

WARRANTY

WARRANTY CLAIMS

•There is a 30-day warranty for broken furniture or any other problems that do not work properly. The warranty will start from the date of purchase which must be verified by proof of purchase.

•Before making a claim, we may be able to answer your query, simply call us. Please leave your purchase order number, along with some details of the problem, if you want a replacement part. We will arrange within 48 hours. If there is out of stock, we will reply with a shipping date.

•The product must be used in accordance with the instructions provided. For health reasons.

•For other reasons, if the furniture needs to be returned, it must be cleaned and dried and operated within 30 days of receipt.

Type of Warranty Claim

•Failure to follow the furniture instructions will invalidate the warranty. Attention please.

•Does not include damage during installation, but includes damage during transportation.

Scope of responsibility

•Shall not bear any responsibility for misuse or user damage and / or loss of parts during the installation of furniture.

•After using, the damage and scratches of the furniture are not covered by the warranty.

The Warranty Relates to All Bought in The Us and Covers The Following Areas

•Sheet parts: 1 month from the date of purchase.

•Electrical parts: 1 month from the date of purchase.

RETURNS

CHANGED YOUR MIND AND NEED TO RETURN YOU ITEM?

PLEASE FOLLOW THE BELOW INSTRUCTIONS:

- If you have purchased and have simply changed your mind, follow the retailer's instructions for returns.

DEFECTIVE ITEMS

- If your item is defective in any way, i.e. it doesn't work but you can't identify why, in the first instance, please call us.

DAMAGED ITEMS

- If you receive an order with obvious shipping damage from the retailer, then we suggest the delivery is refused. If the delivery has been accepted and then shipping damage is found, please follow the specific instructions advised by the retailer.
  In all circumstances please save all packaging material and paperwork for the order. Please be aware that if you dispose of packaging material or attempt to return the merchandise without contacting the fulfiller, you jeopardise your chances of making a claim, and you may not receive a credit for the return.

AFTER-SALES CONTACT

feedbackstation@163.com

(303)800-6387

INSTALLATION
Product Manual

Version: 260126-01-24A-SCX

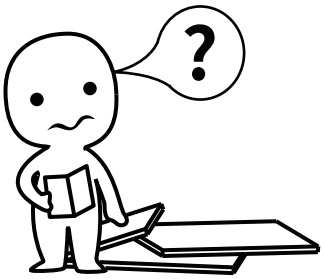

IMPORTANT INFORMATION!

please read the entire manual before starting to assemble and/or using this product.follow the manual thoroughly and keep it for further reference.

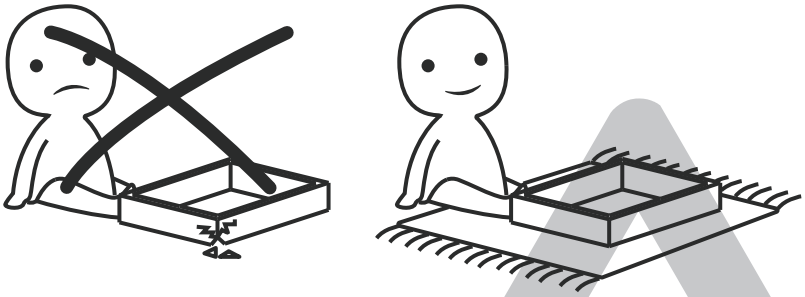

AVOID SCRATCHES!

In order to avoid scratching this furnuture should be assembled on a soft layer-could be a rug.

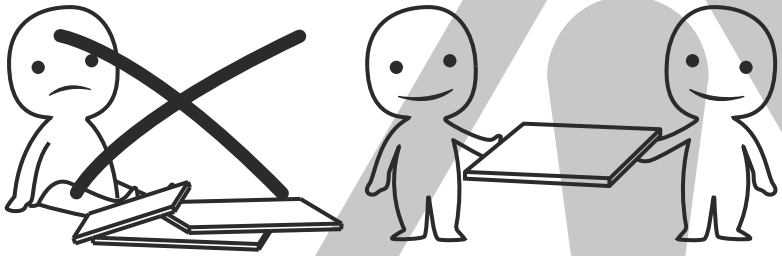

IMPROVE EFFICIENCY !

Try to find a partner to install with you, which can speed up the installation efficiency and shorten the time.

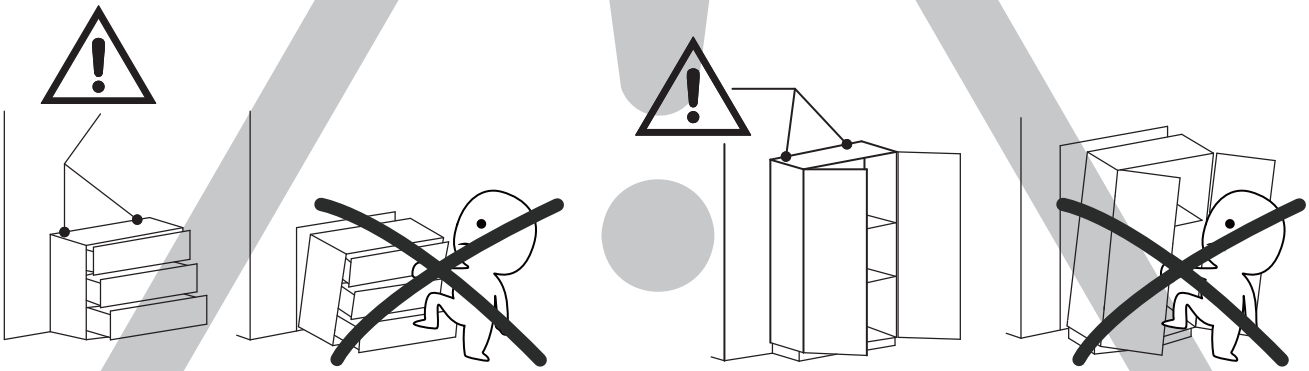

ANTI-TOPPLE WARNING !

Overturned furniture can cause serious or fatal crush injuries. To prevent tipping over, be sure to use the wall attachment, if not included with this product. Please purchase the wall attachment that fit your wall. If unsure, seek professional advice. Please read and follow each step of the instructions carefully.

IMPORTANT !

It is important that any product which is assembled using any kind of screw is re-tightened 2 weeks after assembly,and once every 3 months - in order to assure stability through-out the lifespan of the product.

For regular maintenance and cleaning of the product, for the frame, please use a rag dipped in neutral detergent to fully wipe it, and then dry it with a clean rag.For glass materials, wipe with a rag dampened with water glass cleaner, and then dry with a dry rag.

Do not use an electric screwdriver, and do not use too much force when installing, because the board is easy to break.

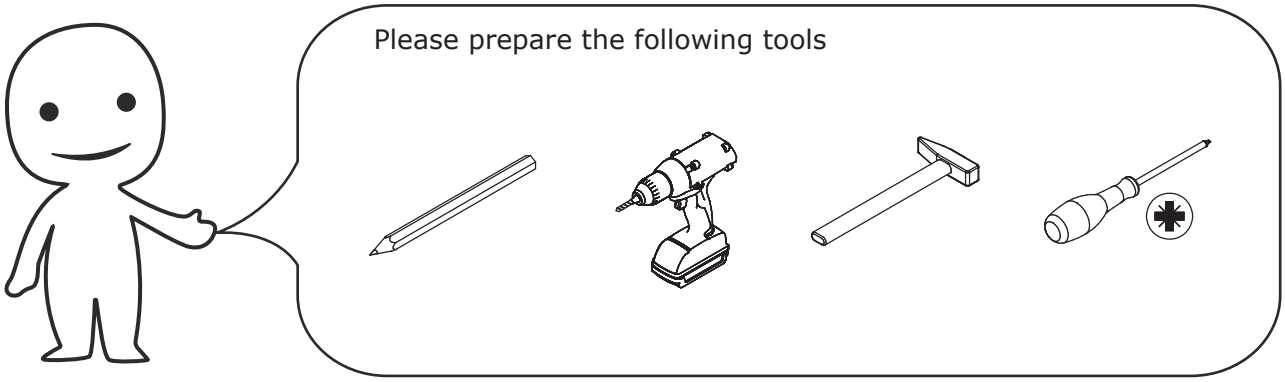

When installing, please carefully confirm whether each screw corresponds to the manual, accessories with similar shapes can be distinguished by size

A x 12+1	B x 16+1	C x 30	D x 4
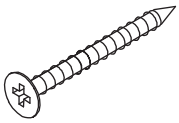	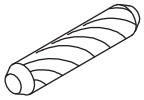	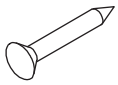	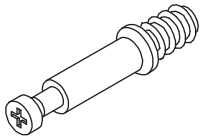
∅4 x 35 mm	∅8 x 30 mm	∅2 x 20 mm	∅6 x 35 mm

E x 24+1	F x 4	G x 4	H x 1
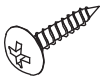	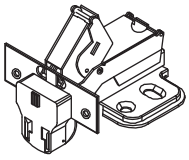		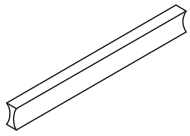
∅4 x 12 mm		∅15 x 10 mm	L 128 mm

J x 2
∅4 x 18 mm

①

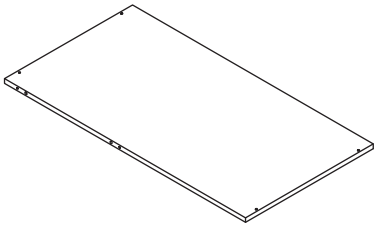

1PC

②

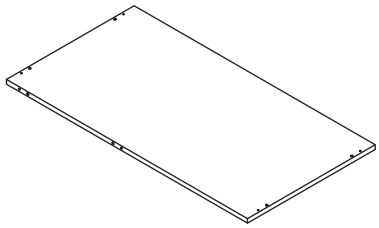

1PC

③

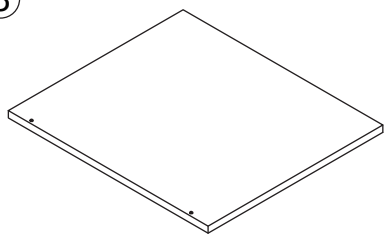

1PC

④

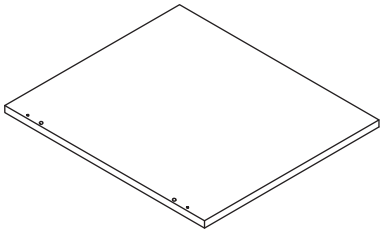

1PC

⑤

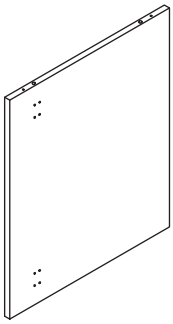

2PCS

⑥

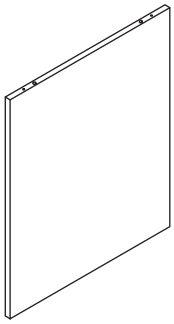

1PC

⑦

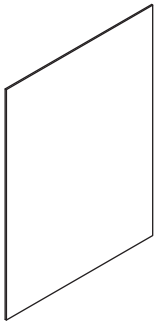

1PC

⑧

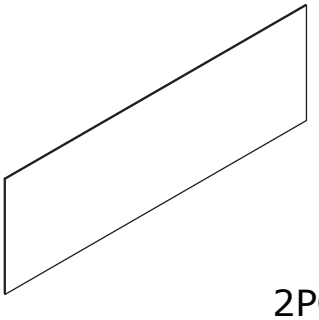

2PCS

⑨

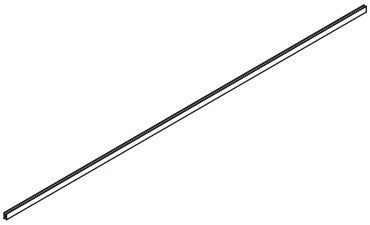

1PC

⑩

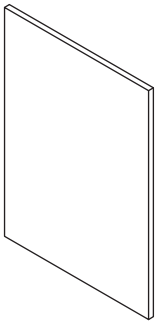

1PC

⑪

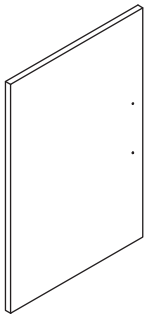

1PC

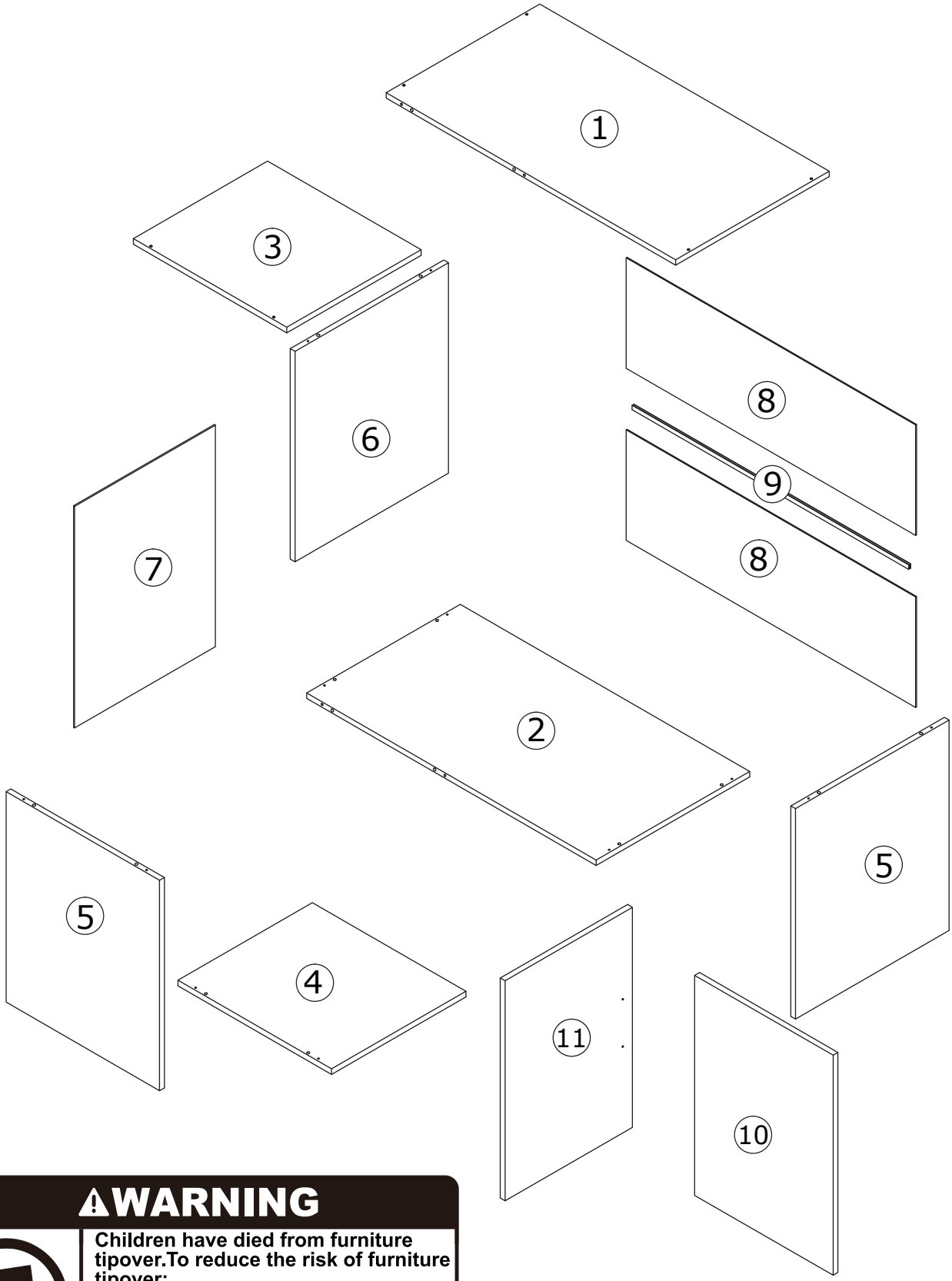

⚠WARNING

Children have died from furniture tipover.To reduce the risk of furniture tipover:

- ALWAYS install Anti-tip device provided.
- NEVER put a TV on this product.
- NEVER allow children to stand,climb or hang on drawers,doors,or shelves.
- NEVER open more than one drawer at a time.
- Place heaviest items in the lowest drawers.

This is a permanent label.
Do not remove!

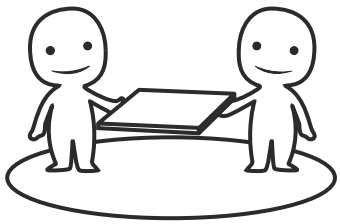

ASSEMBLED BY 2 ADULTS

1

D x 4	
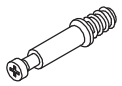 ∅6 x 35 mm	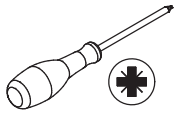

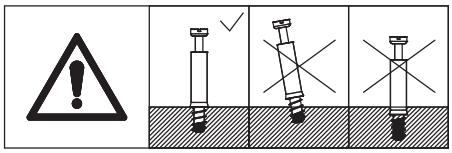

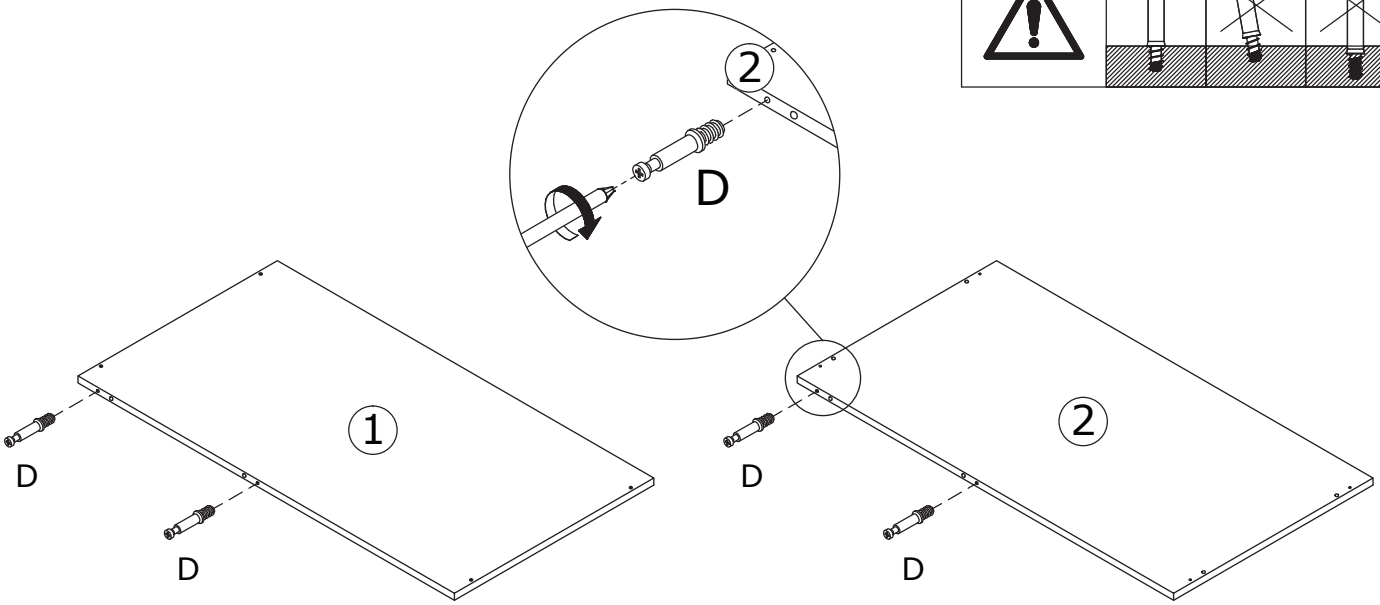

Screw eccentric rod(D) into panel 1 and 2 at first.

2

A x 8	B x 8	
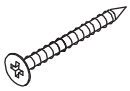 ∅4 x 35 mm	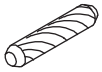 ∅8 x 30 mm	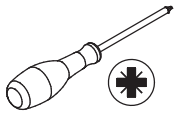

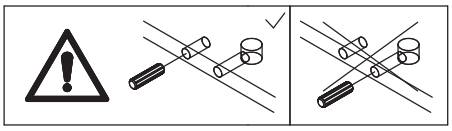

Attach panel 1 and 2 to panel 5 and 6 using wooden dowel(B), and fix with screw(A) as shown.

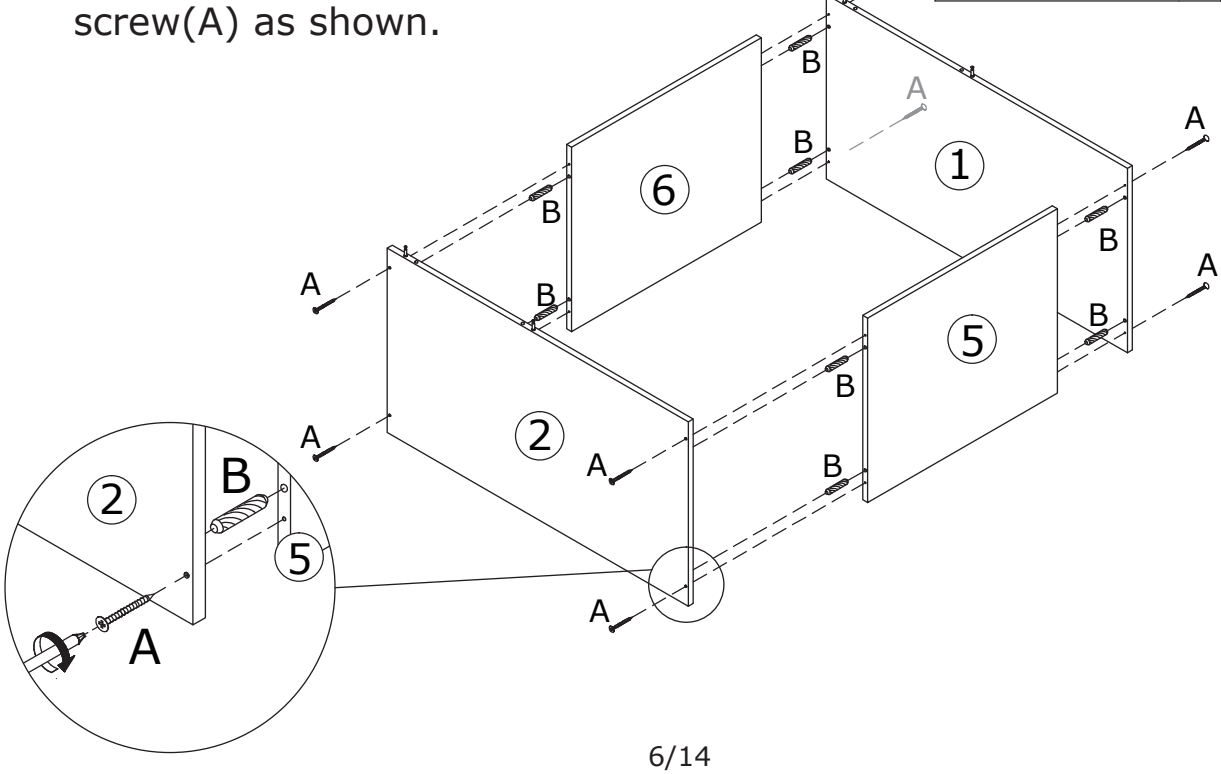

3

A x 4	B x 4	
		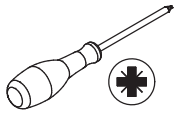
∅4 x 35 mm	∅8 x 30 mm	

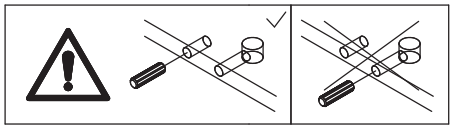

Attach panel 4 and 3 to panel 5 using wooden dowel(B), and fix with screw(A) as shown.

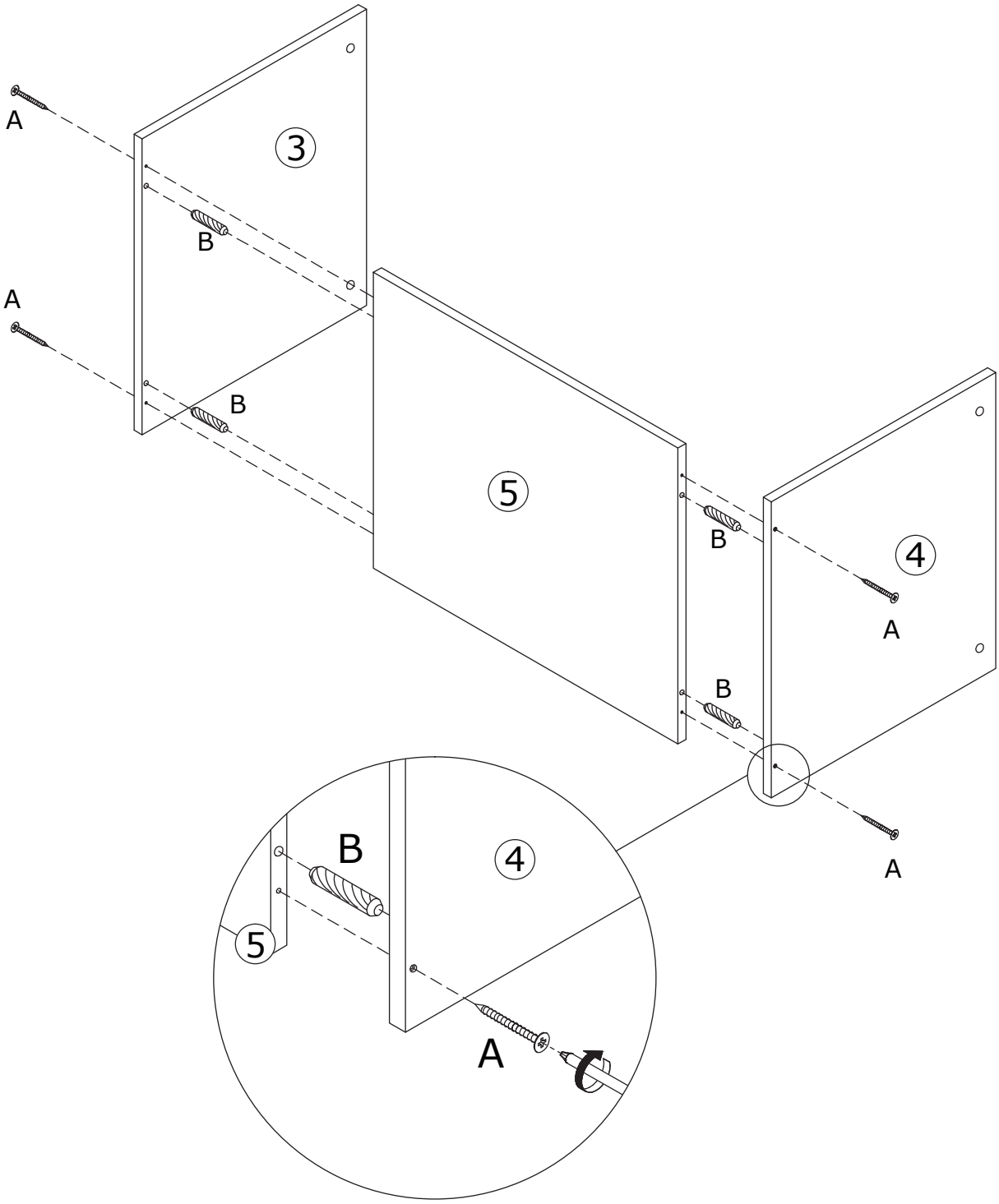

4

B x 4	G x 4	
		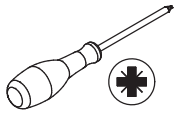
∅8 x 30 mm	∅15 x 10 mm	

Attach panel 3 and 4 to panel 1 and 2 using wooden dowel(B), add cam lock(G) into and turn clockwise to tighten as shown.

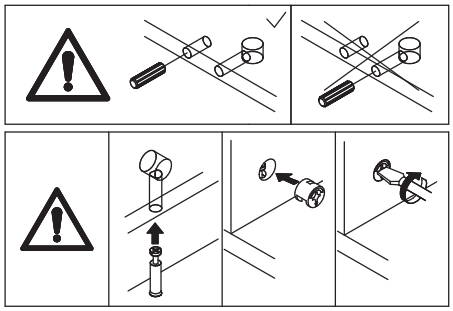

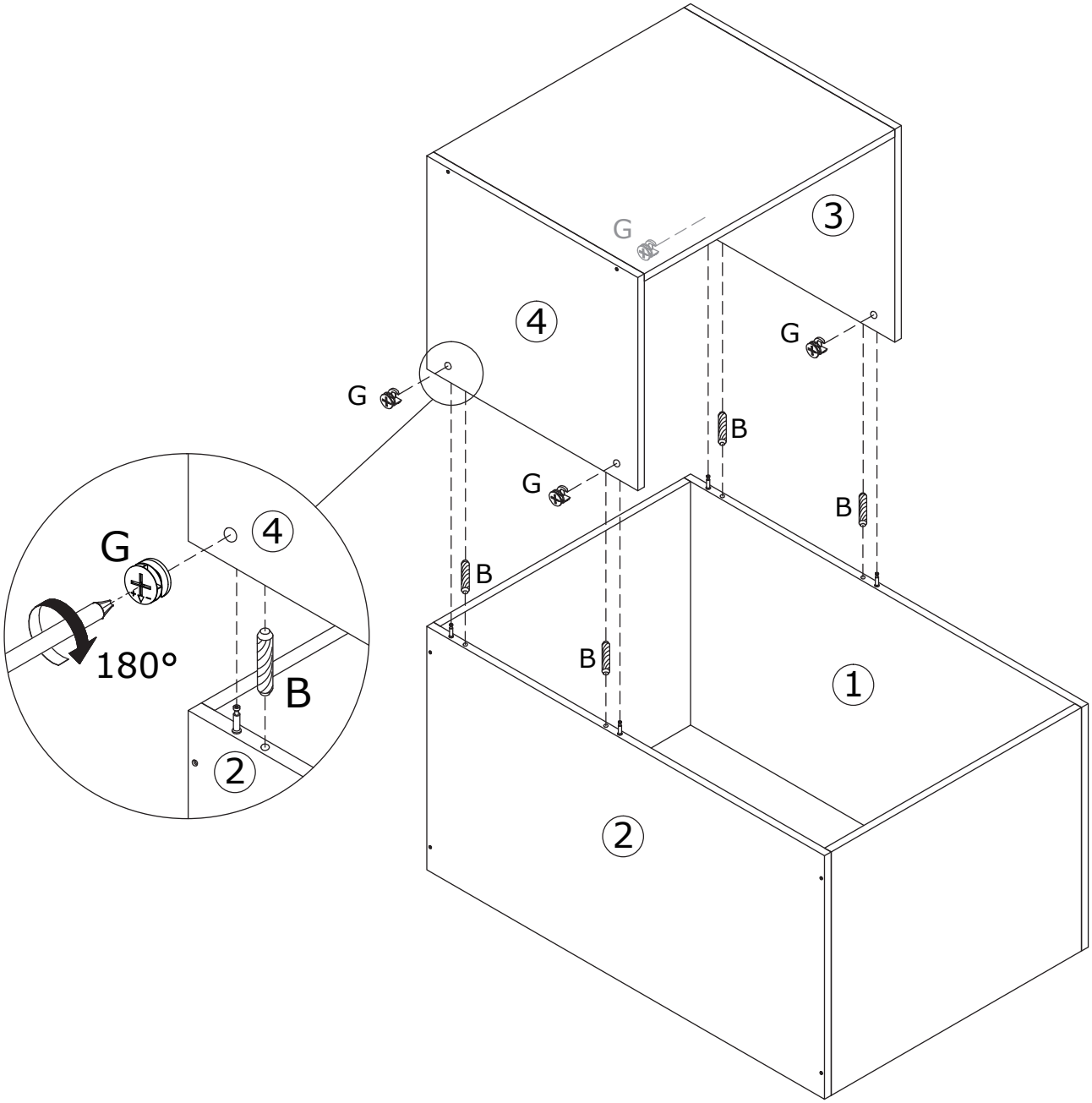

5

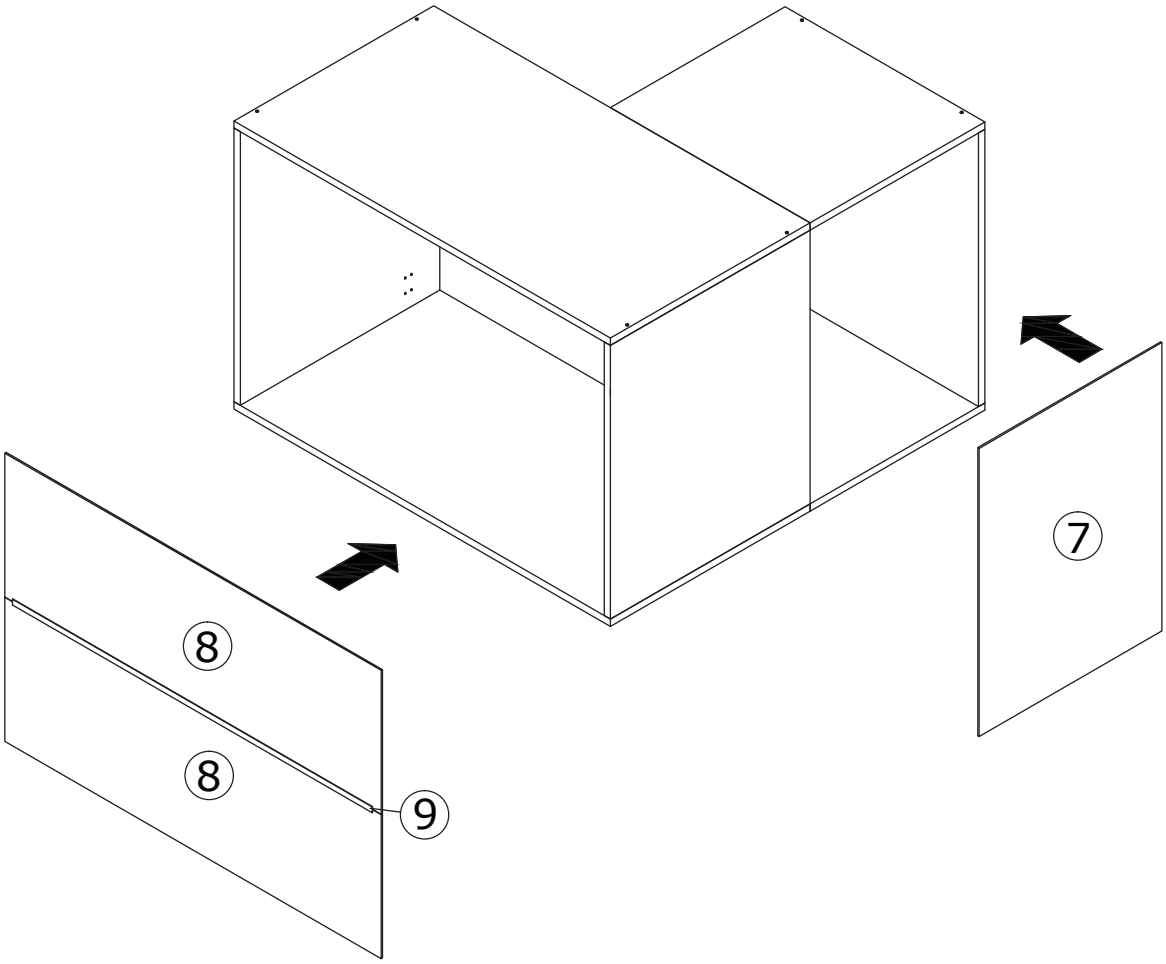

6

C x 30 ∅2 x 20 mm	

Fix back panel 7 and 8 to the unit
with nail(C) as shown.

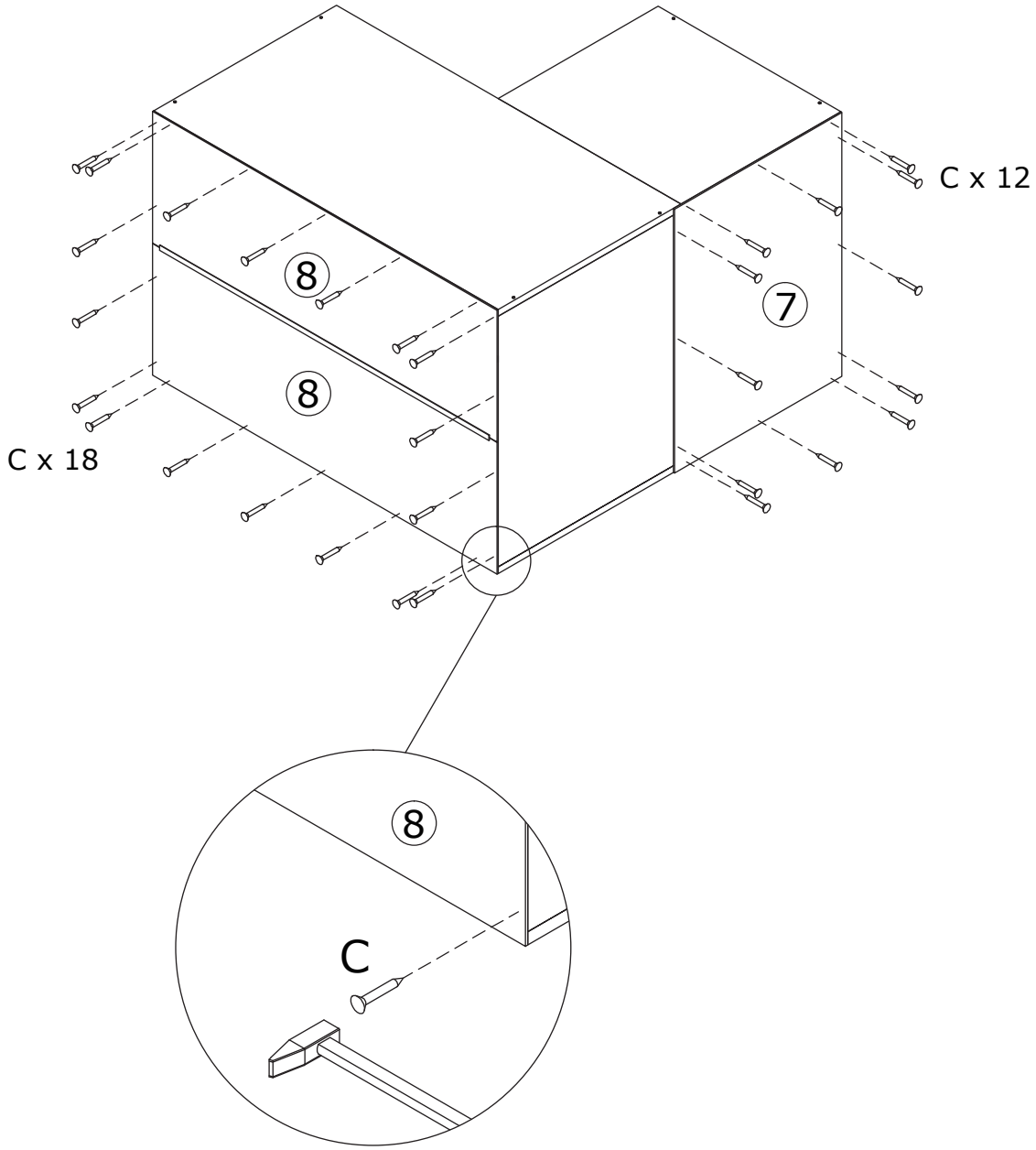

7

E x 8	F x 4	
∅4 x 12 mm	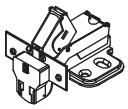	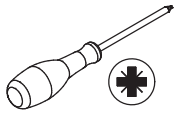

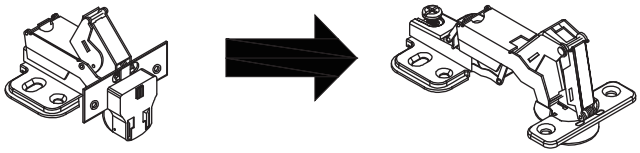

Fix hinge(F) to panel 10 and 11 with screw(E) as shown.

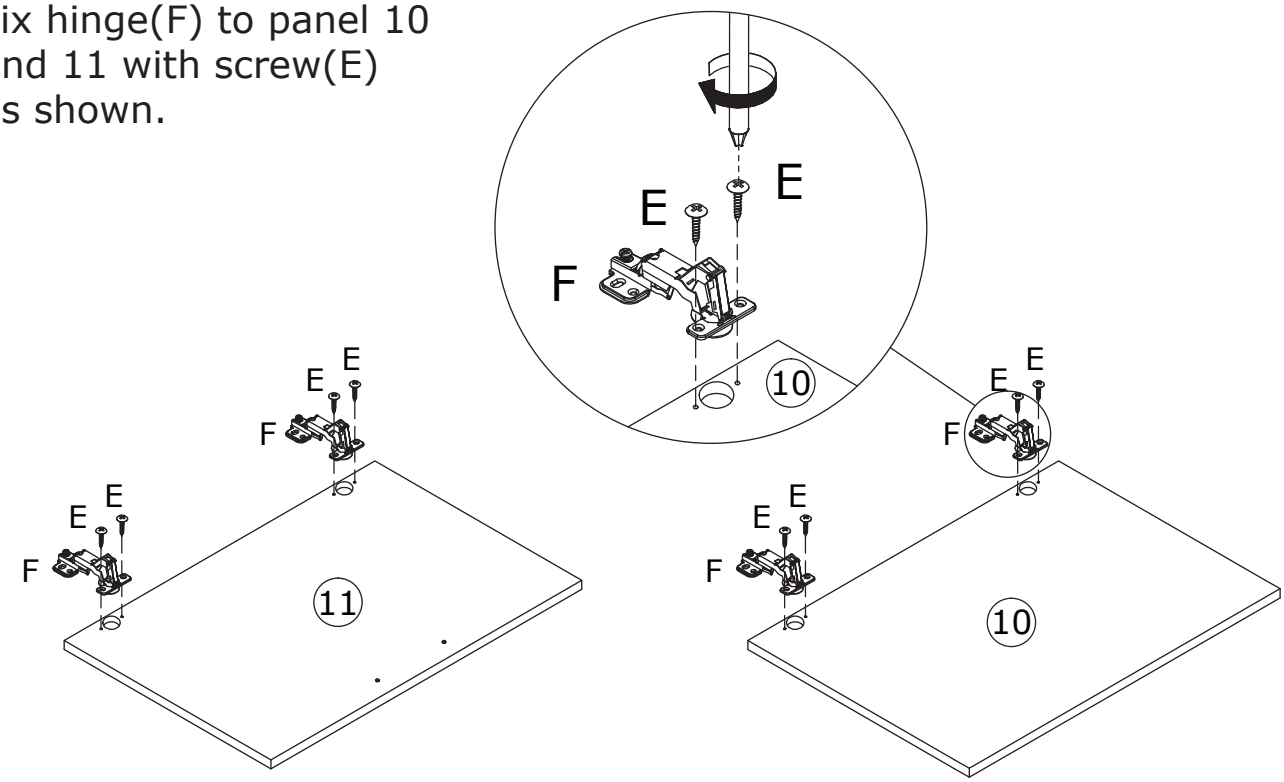

8

H x 1	J x 2	
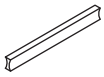	∅4 x 18 mm	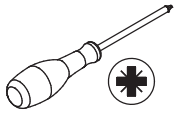

Fix handle(H) to panel 11 with screw(J) as shown.

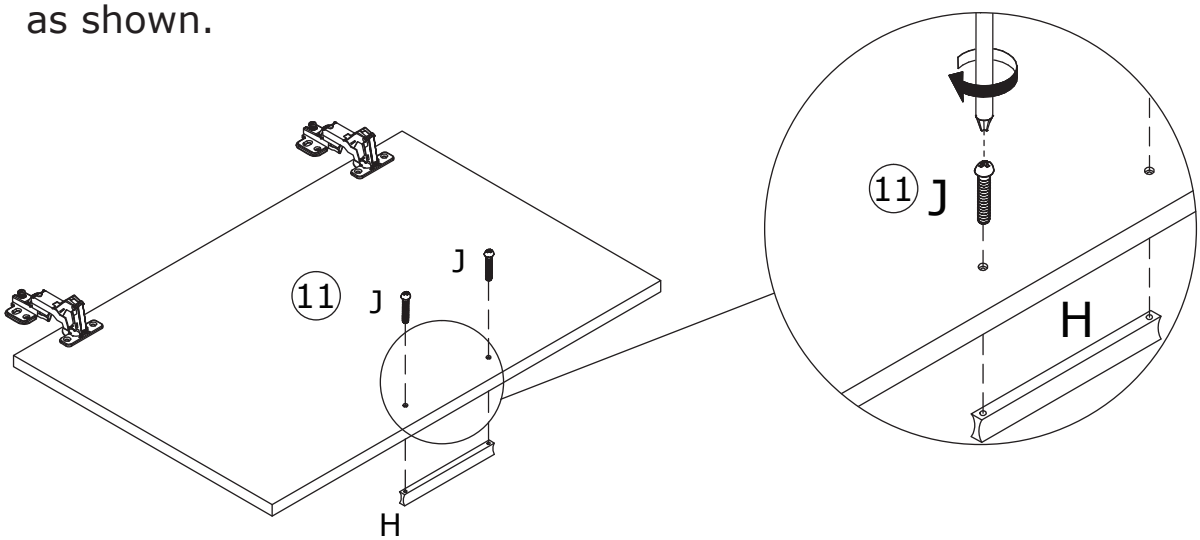

9

E x 8

∅4 x 12 mm

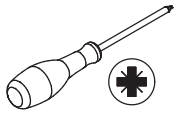

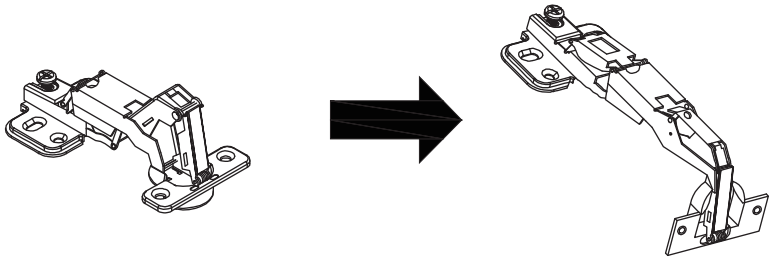

Assemble door 10 to panel 5 by fixing hinge with screw(E) as shown.

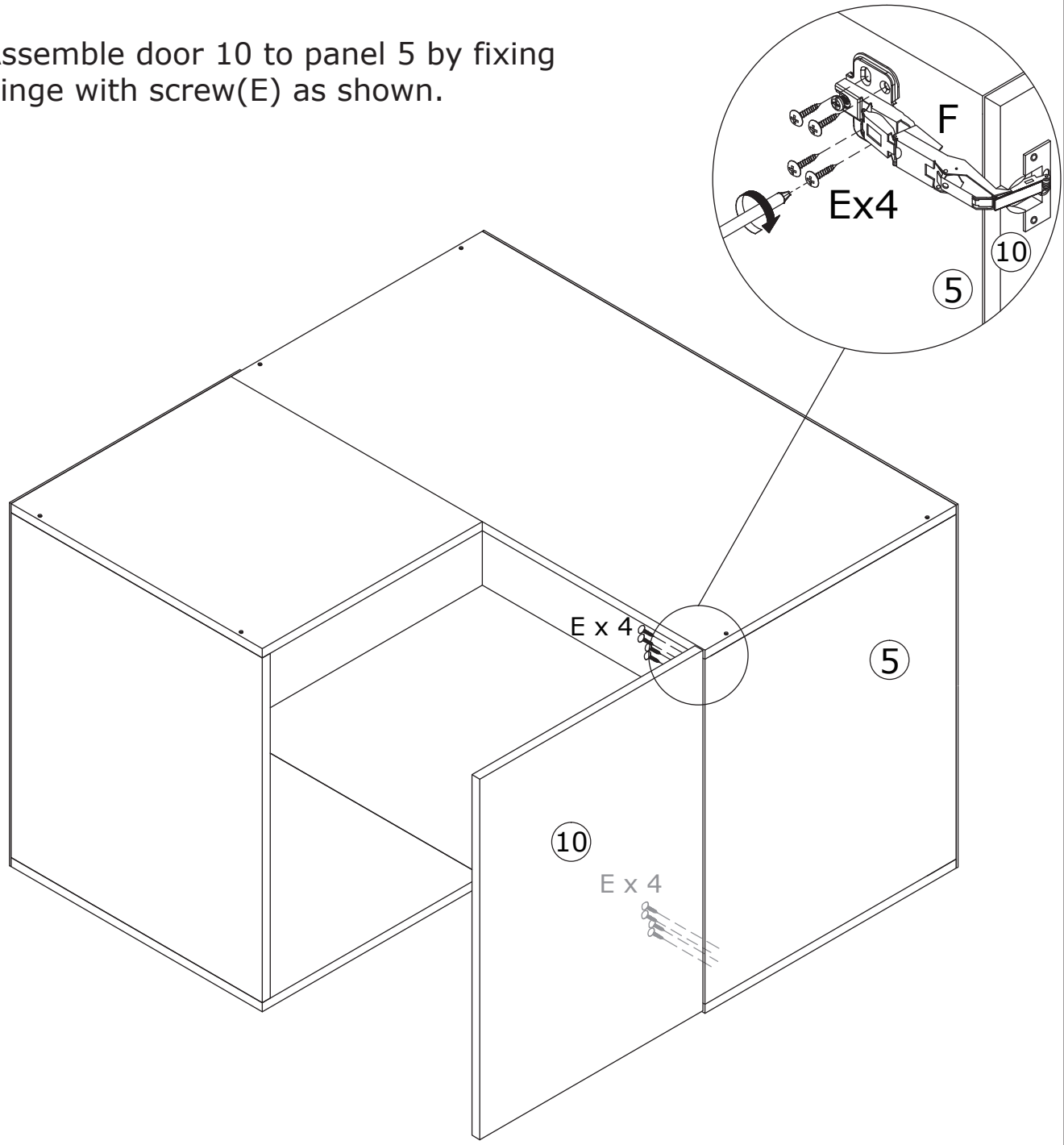

10

E x 8

∅4 x 12 mm

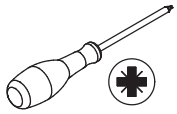

Assemble door 11 to panel 5 by fixing hinge with screw(E) as shown.

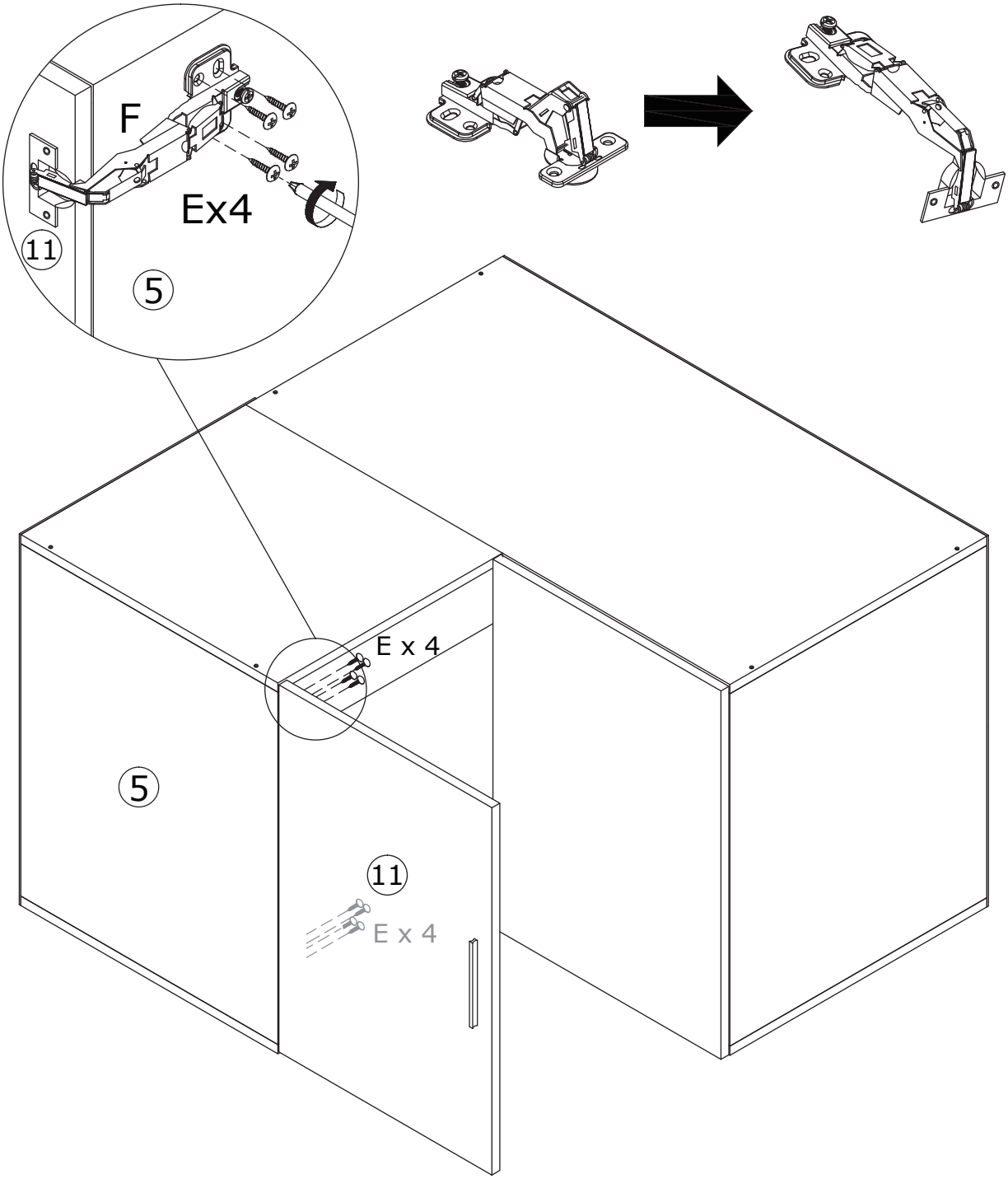

11

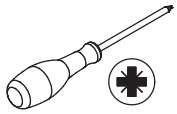

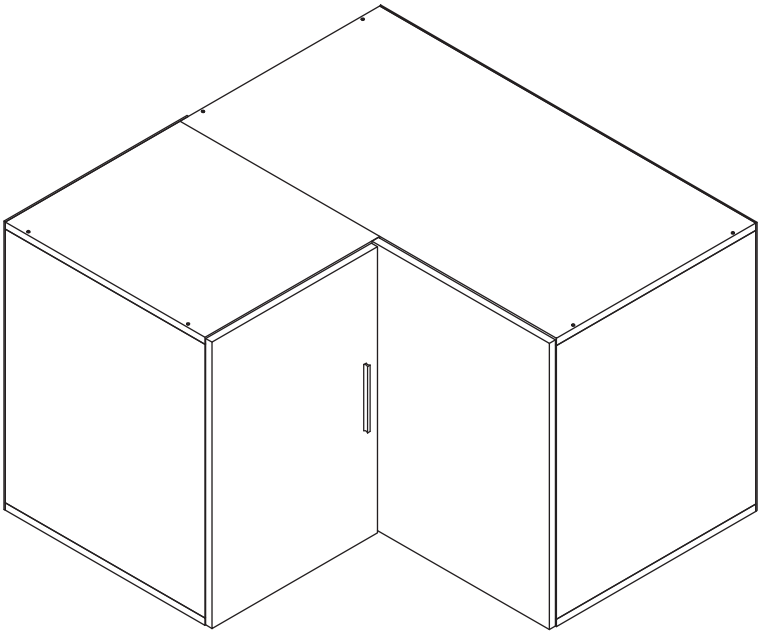

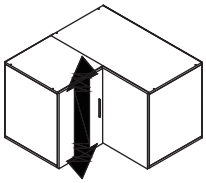

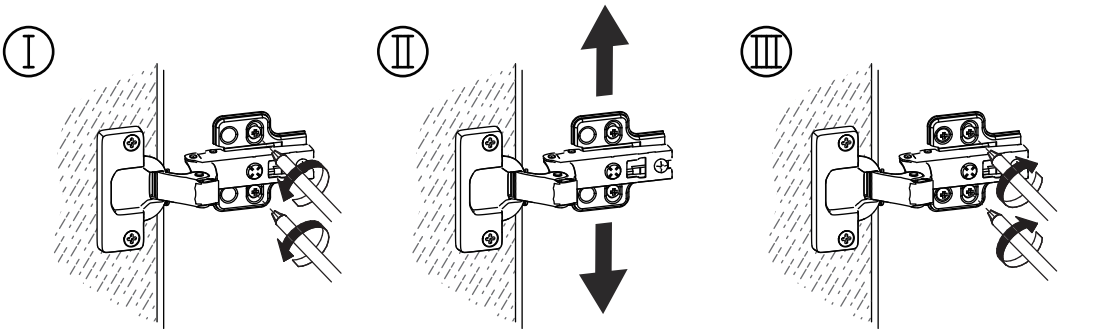

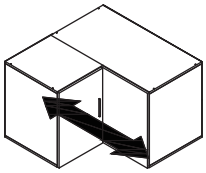

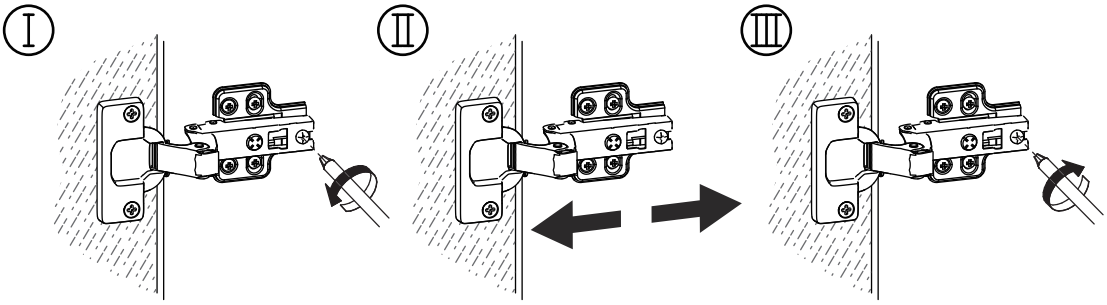

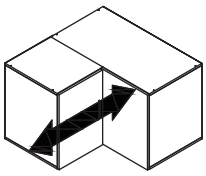

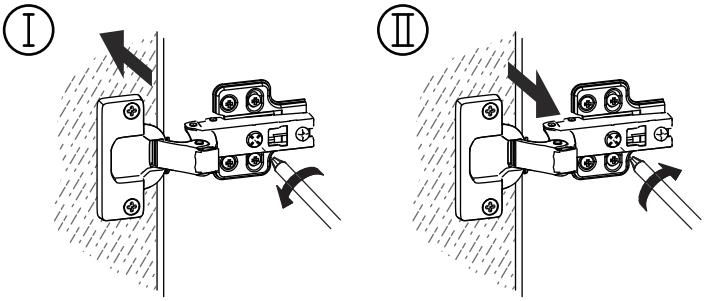

WARRANTY

WARRANTY CLAIMS

•There is a 30-day warranty for broken furniture or any other problems that do not work properly. The warranty will start from the date of purchase which must be verified by proof of purchase.

•Before making a claim, we may be able to answer your query, simply call us. Please leave your purchase order number, along with some details of the problem, if you want a replacement part. We will arrange within 48 hours. If there is out of stock, we will reply with a shipping date.

•The product must be used in accordance with the instructions provided. For health reasons.

•For other reasons, if the furniture needs to be returned, it must be cleaned and dried and operated within 30 days of receipt.

Type of Warranty Claim

•Failure to follow the furniture instructions will invalidate the warranty. Attention please.

•Does not include damage during installation, but includes damage during transportation.

Scope of responsibility

•Shall not bear any responsibility for misuse or user damage and / or loss of parts during the installation of furniture.

•After using, the damage and scratches of the furniture are not covered by the warranty.

The Warranty Relates to All Bought in The Us and Covers The Following Areas

•Sheet parts: 1 month from the date of purchase.

•Electrical parts: 1 month from the date of purchase.

RETURNS

CHANGED YOUR MIND AND NEED TO RETURN YOU ITEM?

PLEASE FOLLOW THE BELOW INSTRUCTIONS:

- If you have purchased and have simply changed your mind, follow the retailer's instructions for returns.

DEFECTIVE ITEMS

- If your item is defective in any way, i.e. it doesn't work but you can't identify why, in the first instance, please call us.

DAMAGED ITEMS

- If you receive an order with obvious shipping damage from the retailer, then we suggest the delivery is refused. If the delivery has been accepted and then shipping damage is found, please follow the specific instructions advised by the retailer.
  In all circumstances please save all packaging material and paperwork for the order. Please be aware that if you dispose of packaging material or attempt to return the merchandise without contacting the fulfiller, you jeopardise your chances of making a claim, and you may not receive a credit for the return.

AFTER-SALES CONTACT

feedbackstation@163.com

(303)800-6387