INSTALLERS DIAGRAM

MODEL NUMBER:1605VA-60-201

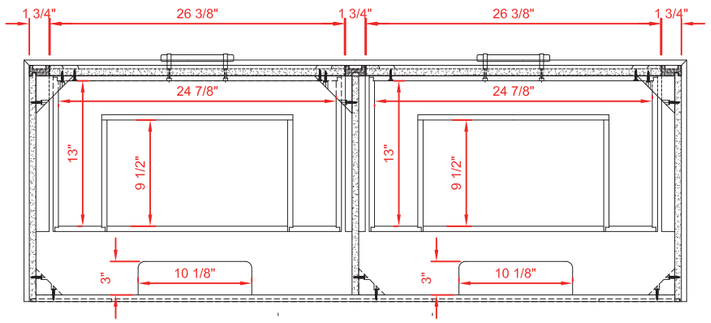

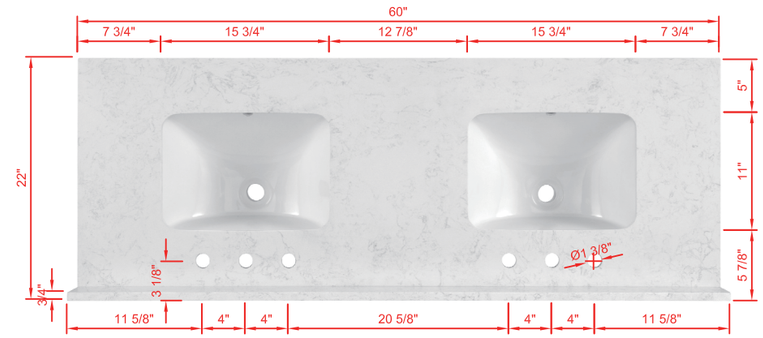

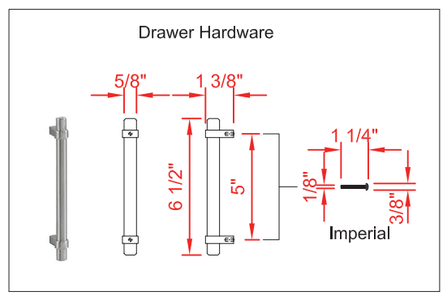

TOP VIEW

Cabinet Weight:184lbs.
Top Weight W/BS:77lbs.
Product Net Weight:261lbs
Product Packed Gross Weight:352lbs
Packed Product Dimensions:
63 in.W x 25 in.D x 45 in.H

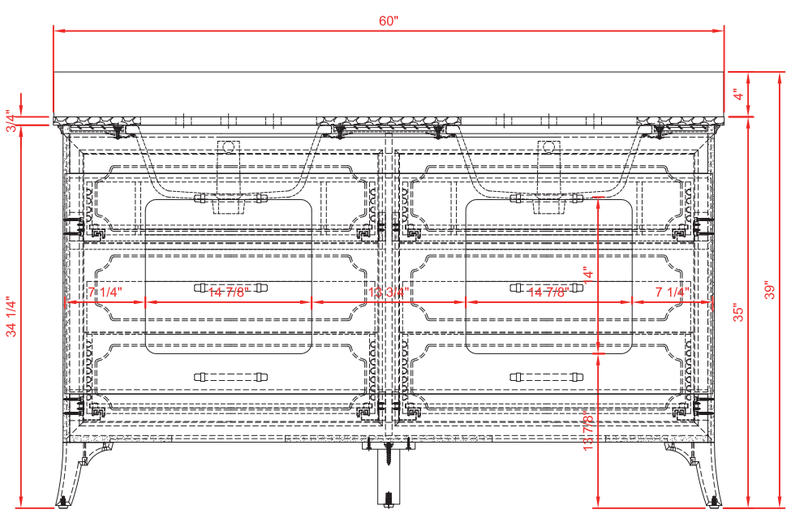

FRONT VIEW

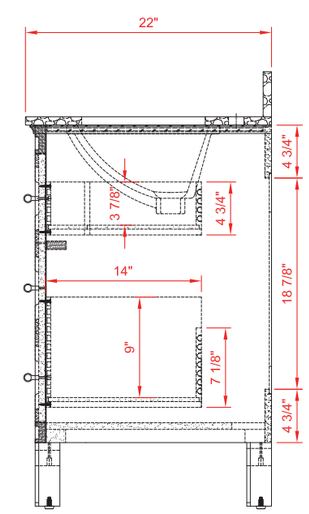

SIDE VIEW