SCOTT LIVING™

Canterbury Bathroom Vanity

Available at **Lowes.com**. See Store Associate for Details.

CREATE YOUR PERFECT VANITY

Choose from various sizes & finishes

72-IN Vanity Base and Top

(72-IN W x 22-IN D x 35-IN H)

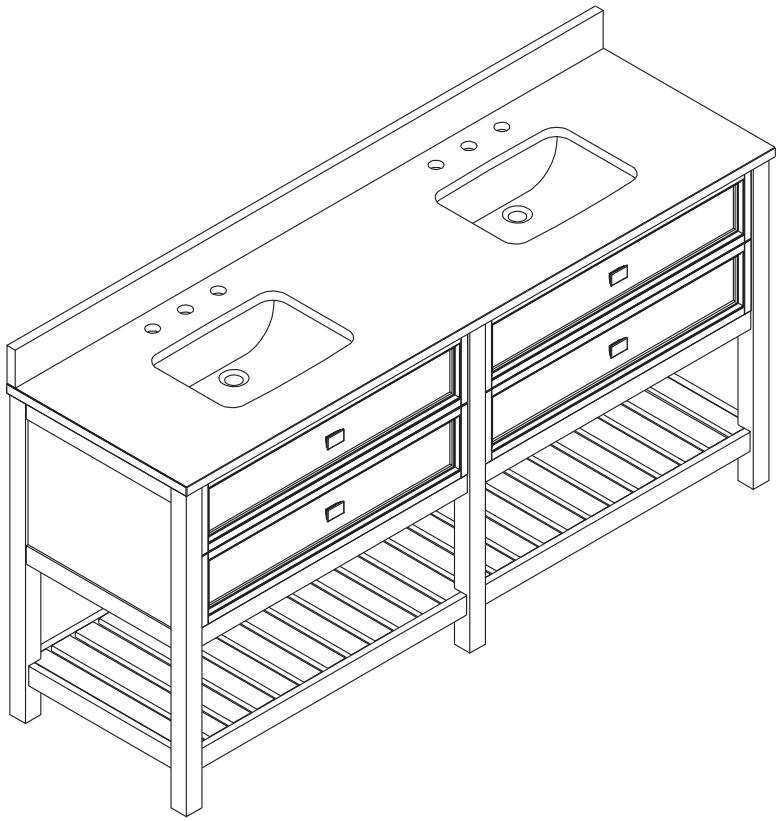

Date Purchased _____

Questions, problems, missing parts?
Before returning to your retailer,
call our customer service department at
1-855-571-1044 9 a.m. - 5 p.m., EST, Monday-Friday.
www.greentouchhome.com

Greentouch

SCOTT LIVING™

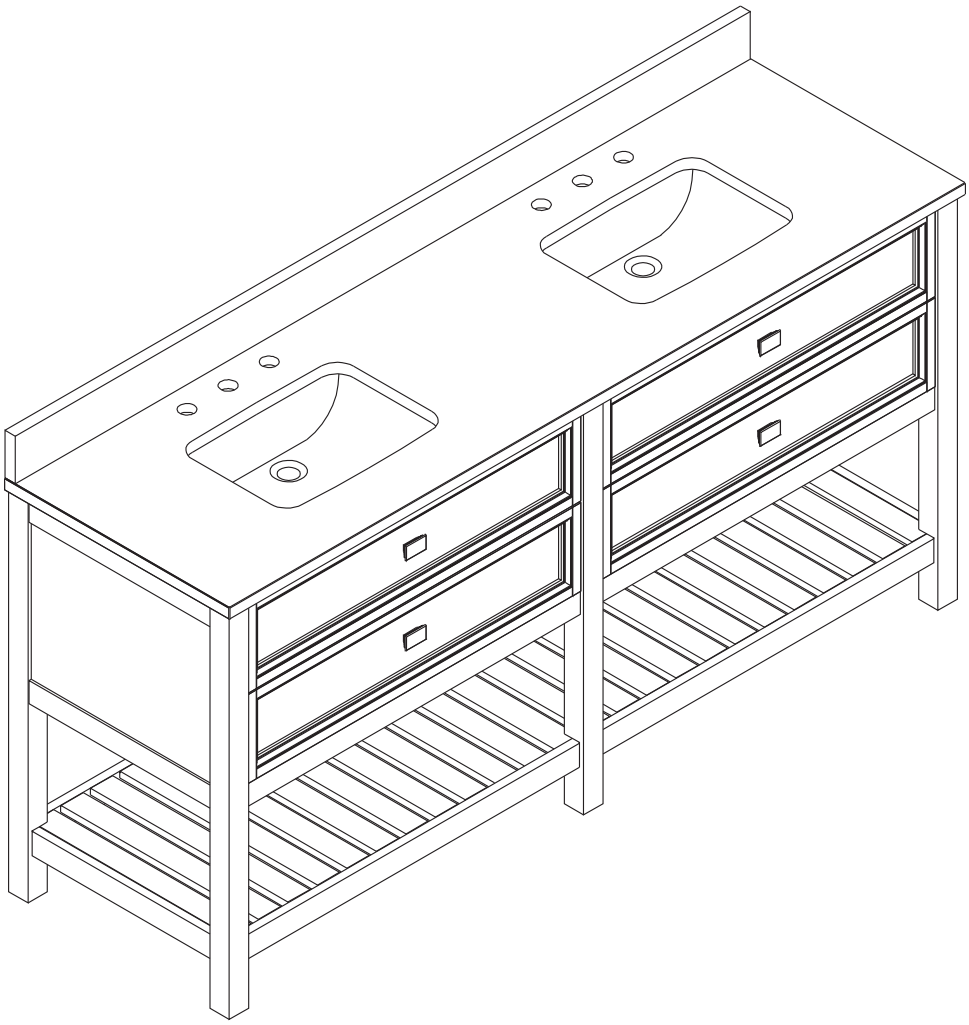

MODEL NUMBER	DESCRIPTION
1227VB-72-201	72" White Finish Vanity Base & Sink
1227VB-72-202	72" Mahogany Finish Vanity Base & Sink
1227VB-72-240	72" Black Birch Finish Vanity Base & Sink
1227VB-72-242	72" Light Grey Finish Vanity Base & Sink
2550VT-72-900	72" Carrara Marble Top with Backsplash
2550VT-72-901	72" White Quartz Top with Backsplash
2550VT-72-903	72" Engineered Carrara Top with Backsplash
2550VT-72-904	72" Black Granite Top with Backsplash
2550VT-72-905	72" Terrazzo Top with Backsplash

PACKAGE CONTENTS

PART	DESCRIPTION	QUANTITY	CARTON
A	Vanity	1	Box 2 of 2
B	Top	1	Box 1 of 2
C	Backsplash	1	
D	Sink	2	Box 2 of 2
E	Top Drawer (preassembled to Vanity(A))	2	
F	Bottom Drawer (preassembled to Vanity(A))	2	

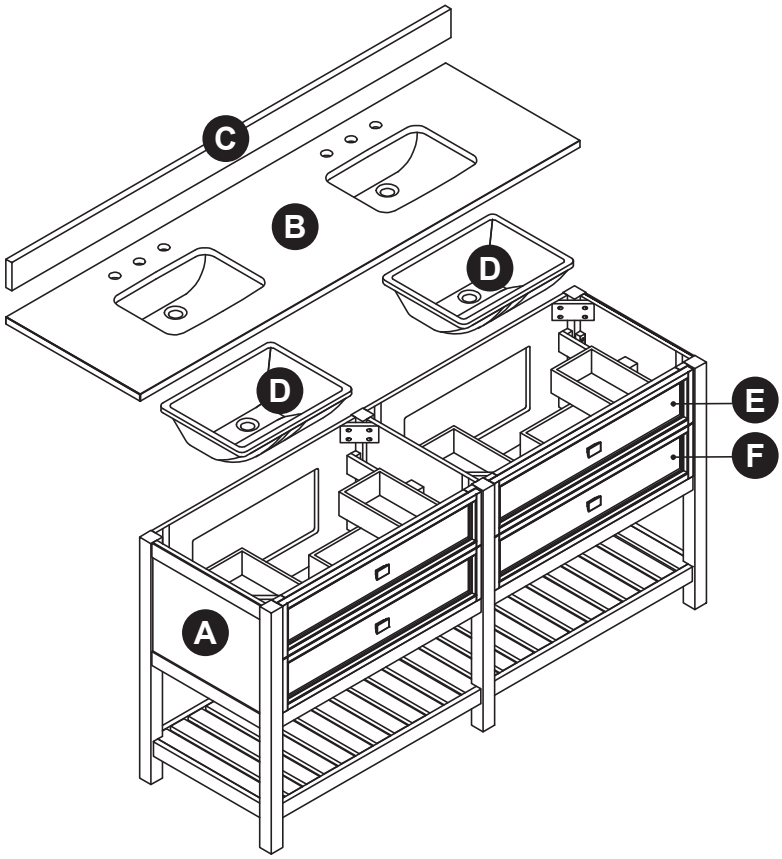

HARDWARE CONTENTS (NOT SHOWN ACTUAL SIZE)

II



Touch Up Pen
Qty. 1

⚠ SAFETY INSTRUCTIONS

Please read and understand this entire manual before attempting to assemble, operate or install the product.

⚠ WARNING

• Some steps are more easily handled with 2 adults.

CAUTION

• Use care when assembling the vanity; take your time and follow the assembly instructions closely.

KEEP THESE INSTRUCTIONS FOR FUTURE REFERENCE.

PREPARATION

Before beginning assembly of product, make sure all parts are present. Compare parts with package contents list and hardware contents list. If any part is missing or damaged, do not attempt to assemble the product.

Estimated Installation Time: 45 minutes (24 hours for adhesive to dry).

Tools Required for Installation (not included): Phillips screwdriver, utility knife or scissors, adhesive, power drill with drill bit, measuring tape, level

INSTALLATION INSTRUCTIONS

1. To remove drawers (E,F) preassembled in vanity (A). Fully extend drawers, locate plastic levers on metal glide tracks at left and right sides of drawer box, push on plastic levers on both sides at the same time, to disengage drawer box from the glides, Then gently lift the drawer up to remove it from the glide tracks.

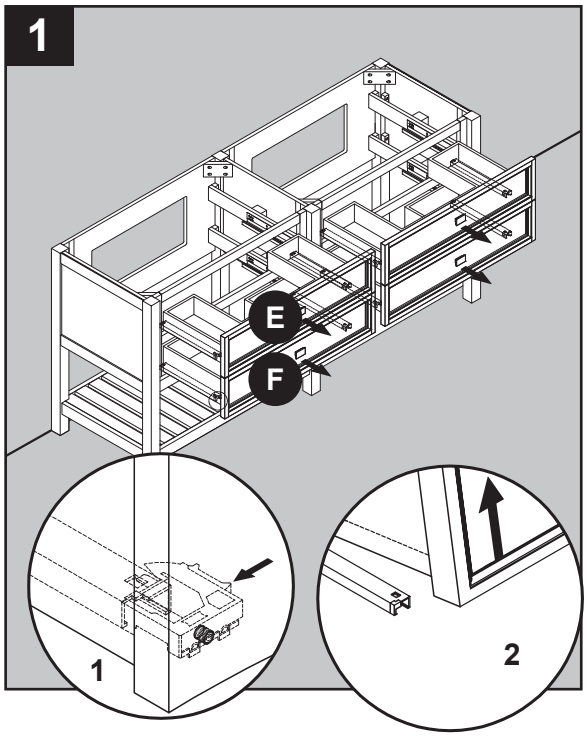

2. Clean area where the vanity (A) will be permanently located prior to beginning installation, ensuring the vanity (A) will not interfere with any water supply and drain lines once mounted.
   Locate wall studs and mark locations. With the help of another adult, place completed Vanity Cabinet Assembly to its final location. Adjust the height of the Vanity Cabinet (A) by twisting the adjustable leveler foot pins on the bottom of each leg. Twist clockwise to decrease height or twist counter-clockwise to increase vanity height.

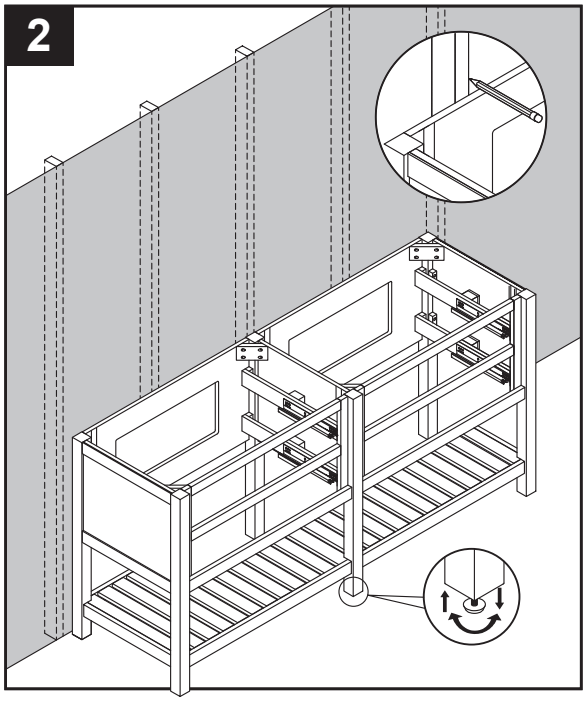

INSTALLATION INSTRUCTIONS

3. Using hardware appropriate for your wall type (not included), secure Vanity Cabinet (A) to two wall studs anywhere through the Vanity Mounting Plates. Be careful not to disturb any electrical or water lines that may be concealed in the wall.

⚠ WARNING
Vanity (A) **MUST** be secured to the wall.

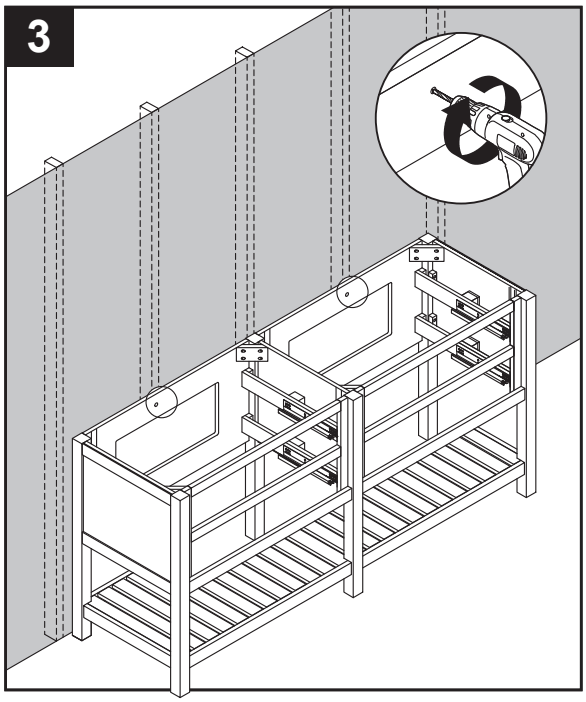

4. To install the top with sink to the vanity (A). Apply silicone adhesive to the top edge of the wood cabinet. With the help of another adult, gently lower the stone top with assembled sink onto the cabinet. Make sure the stone top is flush with the back side of the wood cabinet and the stone overhang is equal on both sides over the wood cabinet left and right side walls. Remove any excess adhesive before allowing to dry. Tip: it may be easier to install the faucet and/or drain assembly (not included) before securing the stone top to the wood cabinet.

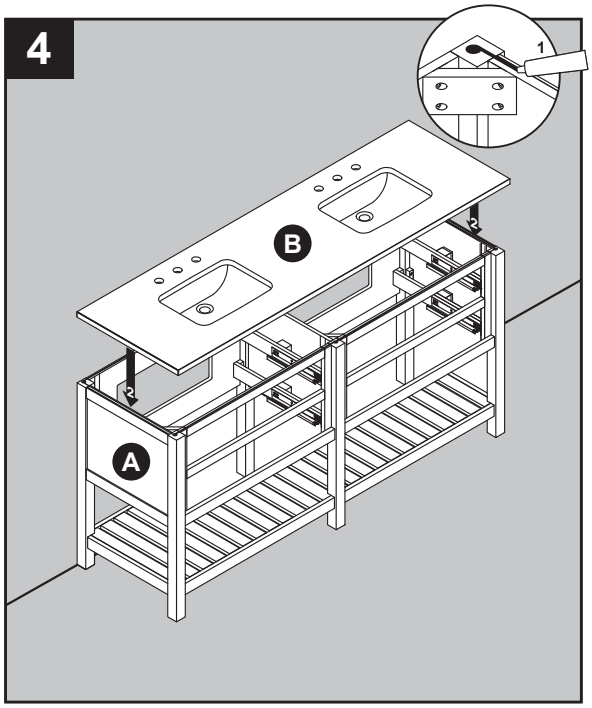

INSTALLATION INSTRUCTIONS

5. Locate Top drawer (E) and Bottom drawer (F) and set aside. Fully extend lower drawer glide tracks. With the help of another adult, hold the extended glide in one hand and the drawer in the other. Gently place the back of the drawer box into the metal hook located on the back of the drawer track. Once the glide hook has been slide into the hole in the back of the drawer box, gently lower the drawer box down onto the extended glide tracks. At the same time depress both of the glide handles and allow the drawer box to fully rest on the glide tracks. Test to see if the drawer box is fully engaged. If the drawer box can still be lifted off the glide track then start again from the beginning. Never force anything or else damage to the drawer or glide hardware could result. Repeat for both drawers. The drawers location can be adjusted slightly up or down by twisting the adjuster knob next to the glide handles.

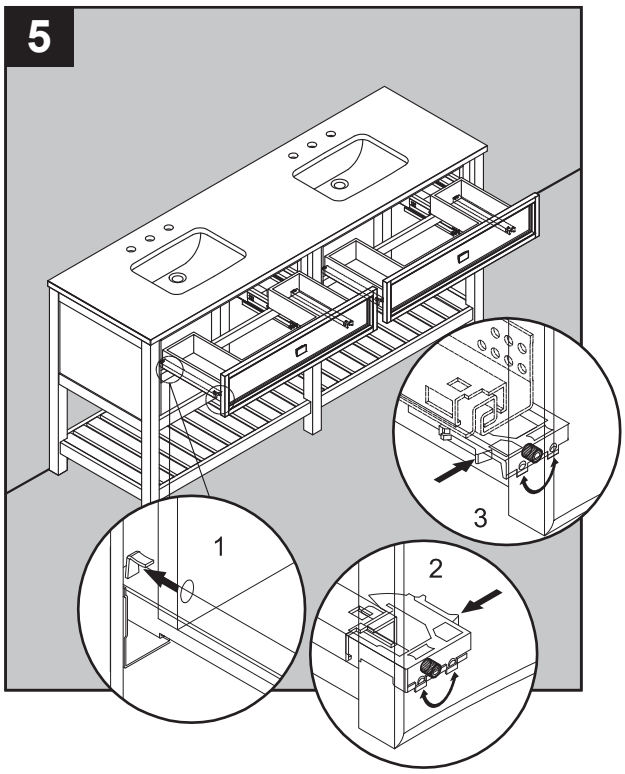

6. Apply adhesive (not included) to unpolished side and bottom of backsplash (C). Position backsplash (C) on top (B) and against wall. Clean any excess adhesive before allowing to dry.
   Assembly is now complete. Install desired faucet and drain assemblies (neither included) if not already done at step 4. Per the manufacturers' instructions to complete the installation.

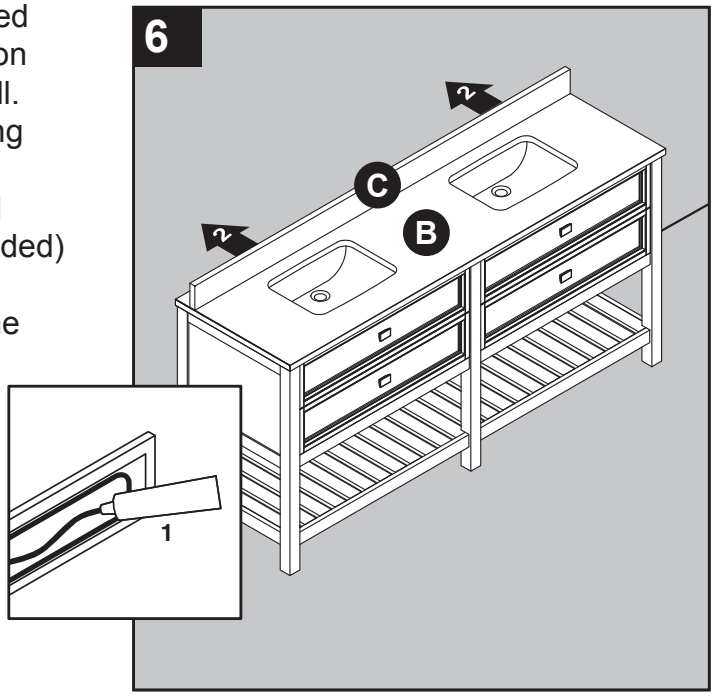

CARE AND MAINTENANCE

- Dust the vanity regularly with a soft, non-lint producing cloth or household dusting product.
- You can clean the vanity with a gentle, non-abrasive household cleaner.
- Make sure to dry the wood immediately with a soft cloth or towel.
- The ceramic sink can be cleaned using standard ceramic cleaning agents available at your local supplier.
- Tips for using touch-up pen (II): For scratches, stroke in direction of scratch; for worn areas, stroke in direction of wood grain. Rub off excess colorant promptly with a soft cloth.

IMPORTANT

- Shade variations and patterns are an inherent characteristic of stone (e.g. granite, marble, engineered stone). Stone tops will vary from product to product. Use caution placing items such as soap or any fragranced material on the stone surface. Use a soap dish, coaster or similar item to protect the surface if placing any soap or fragranced products on the stone.
- If soap or fragranced products come in contact with the stone top, rinse the surface with water and dry using a soft non-abrasive cloth.
- **WARNING:** Must use cleaning agents safe for stone. Check your cleaning agents use restrictions before using on any stone. Damage to the stone may result. Vanity Manufacturer not responsible for damage caused by improper cleaning agents or soaps used. Warranty will not cover damage caused by the use of improper soaps or cleaning agents.
- **DO NOT** use products to clean the stone top that contain acetone, lemon, vinegar or other acids as these may cause damage to the stone surface.
- Periodically reseal the stone top using an appropriate stone sealer available from your local home store. Follow the manufacturer's directions on how to apply.

WARRANTY

The manufacturer warrants this item against defects in materials and workmanship for a period of one (1) year from the date of original retail purchase. This warranty applies only to the original purchaser. This warranty does not apply to any damage on the product by accident, misuse, or modified, improper installation or by affixing accessories not produced by the manufacturer. The manufacturer will not be held liable for damages caused from cleaners or soaps that etch or stain the stone top. The manufacturer is not accountable whatsoever for product installation during the warranty period. There is no further expressed warranty. The manufacturer shall not be legally responsible for incidental, consequential or special damages arising at or in connection with product use or performance except as may otherwise be accorded by law. The manufacturer disclaims any and all implied warranties.

REPLACEMENT PARTS FOR 1227VB-72-201

For replacement parts, call our customer service department at 1-855-571-1044, 9 a.m. - 5 p.m., EST, Monday - Friday.

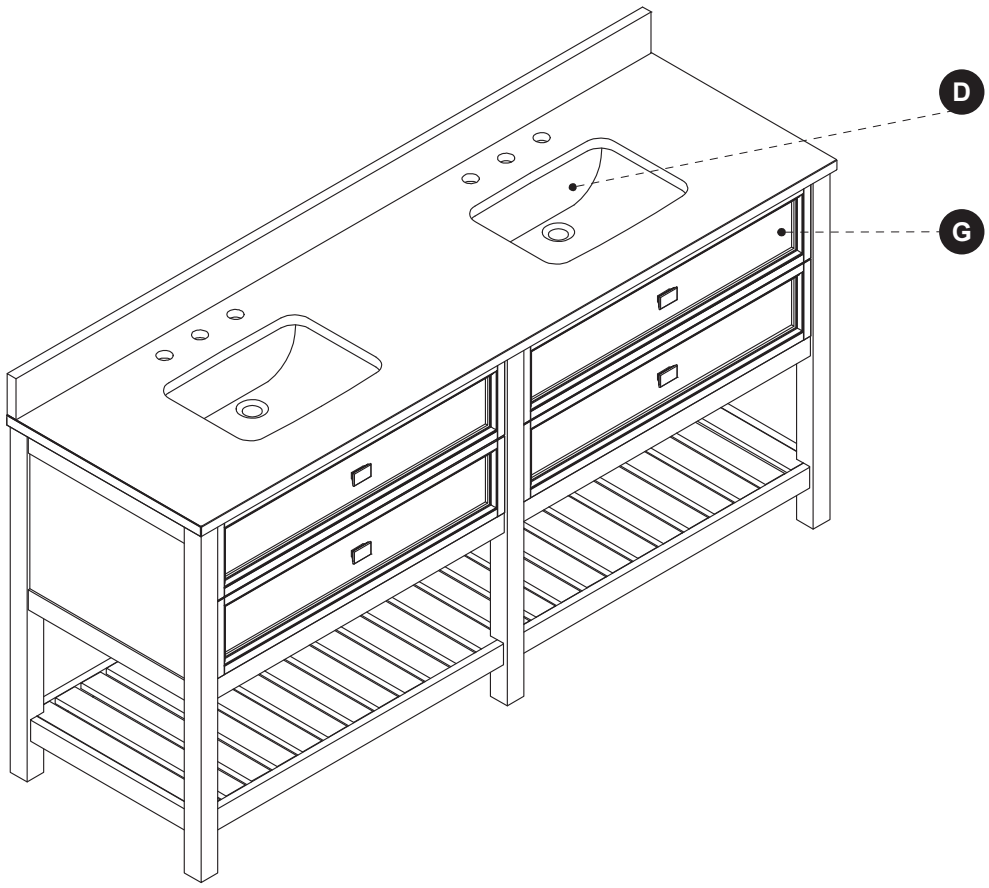

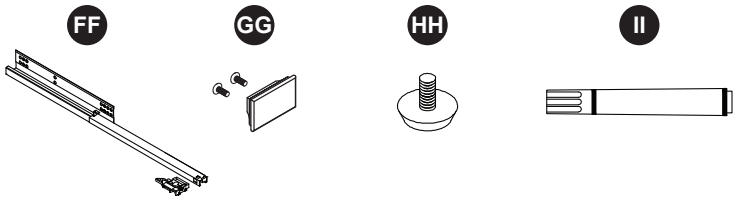

PART	DESCRIPTION	PART #
D	Sink	PU17-18x14-SQUARE
G	Drawer Front	1227VB-72-201-001
FF	Drawer Glide	PUDTC-14x3-Handle
GG	Drawer Handle	CF-32-003-BN
HH	Leveler	T-1007
II	Touch Up Pen	OF-0010

REPLACEMENT PARTS FOR 1227VB-72-202

For replacement parts, call our customer service department at 1-855-571-1044, 9 a.m. - 5 p.m., EST, Monday - Friday.

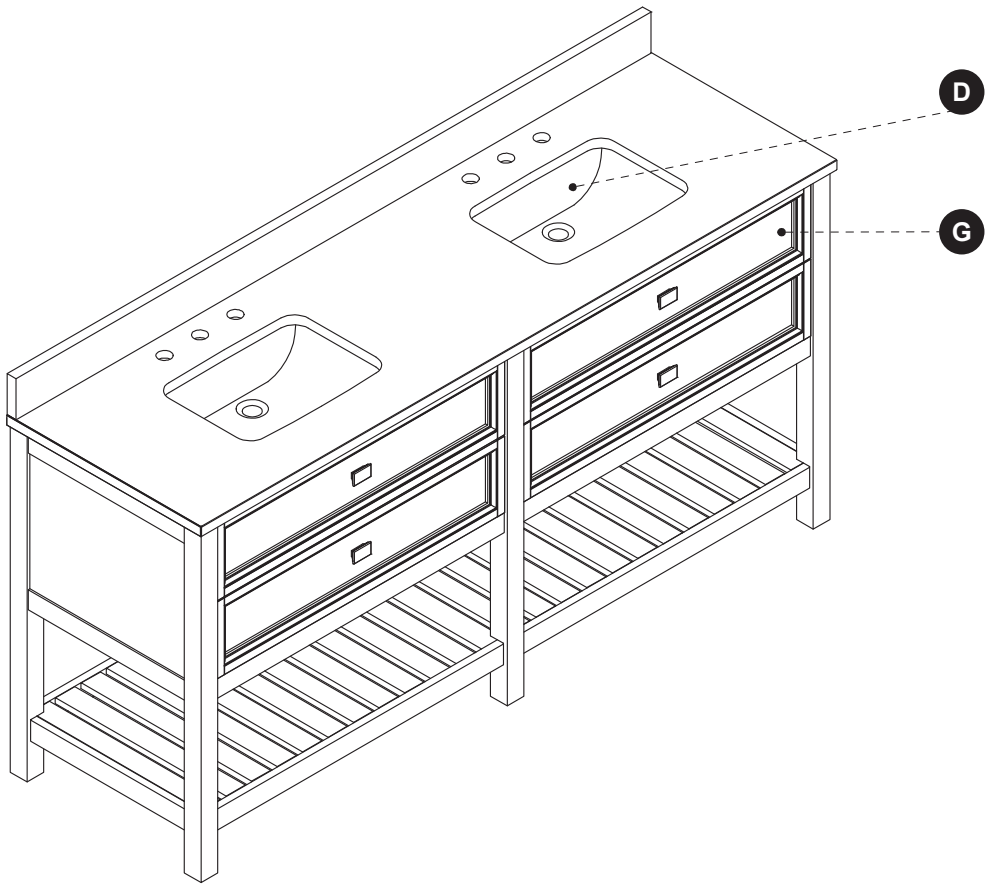

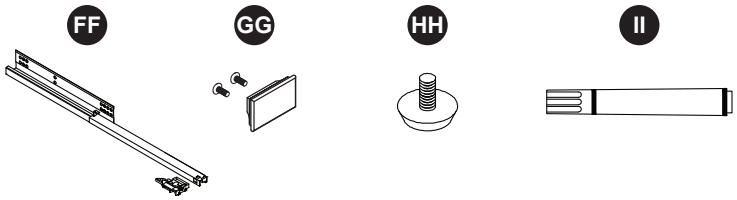

PART	DESCRIPTION	PART #
D	Sink	PU17-18x14-SQUARE
G	Drawer Front	1227VB-72-202-001
FF	Drawer Glide	PUDTC-14x3-Handle
GG	Drawer Handle	CF-32-003-BN
HH	Leveler	T-1007
II	Touch Up Pen	W3350A

REPLACEMENT PARTS FOR 1227VB-72-240

For replacement parts, call our customer service department at 1-855-571-1044, 9 a.m. - 5 p.m., EST, Monday - Friday.

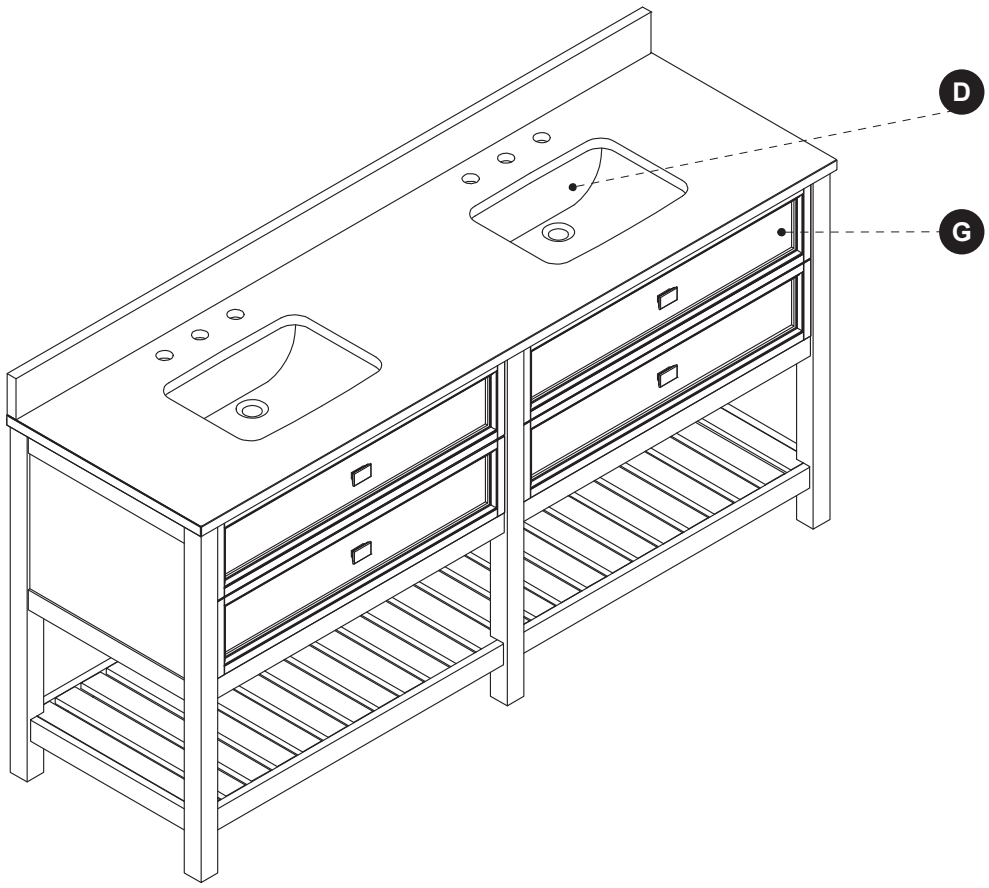

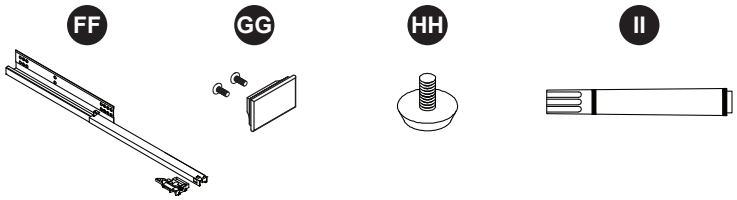

PART	DESCRIPTION	PART #
D	Sink	PU17-18x14-SQUARE
G	Drawer Front	1227VB-72-240-001
FF	Drawer Glide	PUDTC-14x3-Handle
GG	Drawer Handle	CF-32-003-BN
HH	Leveler	T-1007
II	Touch Up Pen	OX-0180Y

REPLACEMENT PARTS FOR 1227VB-72-242

For replacement parts, call our customer service department at 1-855-571-1044, 9 a.m. - 5 p.m., EST, Monday - Friday.

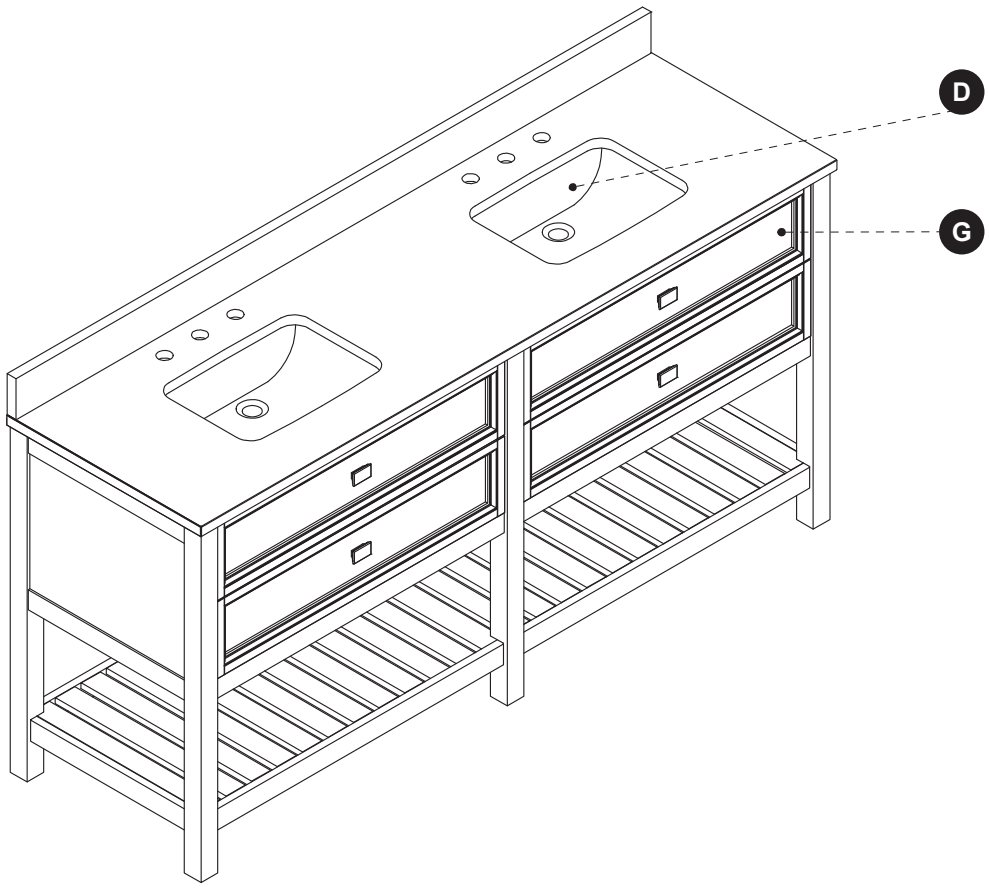

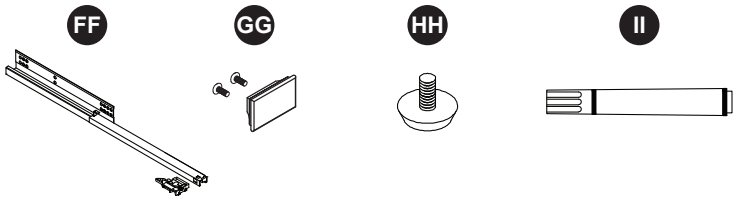

PART	DESCRIPTION	PART #
D	Sink	PU17-18x14-SQUARE
G	Drawer Front	1227VB-72-242-001
FF	Drawer Glide	PUDTC-14x3-Handle
GG	Drawer Handle	CF-32-003-BN
HH	Leveler	T-1007
II	Touch Up Pen	OF-0120R