KOHLER. Faucets

Composed®

MasterShower Thermostatic Valve Trim

K-T73133-3

Features

- Includes face plate with handle.
- Single handle controls temperature setting.
- Supplied with ADA compliant metal cross handle.
- Complements the Composed faucet and accessory collections.

Material

- Premium material construction with metal handle ensures reliability and durability.
- KOHLER finishes resist corrosion and tarnishing, exceeding industry durability standards.

Installation

- Trim set requires valve to complete installation.
- Patented K-joint installation technology ensures consistent trim appearance, regardless of variability in valve rough-in.

Required Accessories

K-2972-KS 1/2" Thermostatic Mixing Valve
or
K-2975-KS 3/4" Thermostatic Mixing Valve

ADA

Codes/Standards

ASME A112.18.1/CSA B125.1
ASSE 1016/ASME A112.1016/CSA B125.16
ADA
ICC/ANSI A117.1

KOHLER® Faucet Lifetime Limited Warranty

See website for detailed warranty information.

Available Color/Finishes

Color tiles intended for reference only.

Color	Code	Description
	CP	Polished Chrome
	TT	Titanium

KOHLER Faucets

Composed®

MasterShower Thermostatic Valve Trim

K-T73133-3

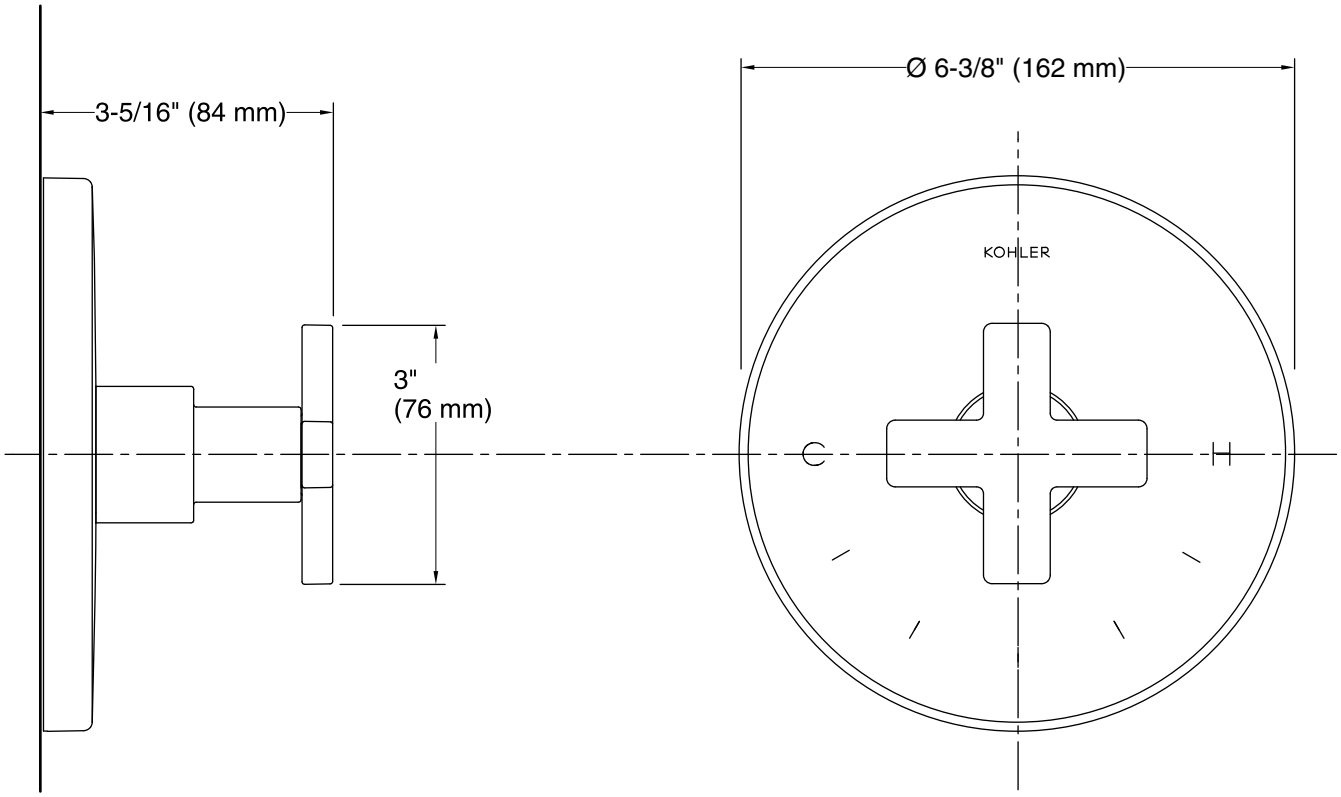

Technical Information

All product dimensions are nominal.

Notes

Install this product according to the installation guide.

ADA compliant when installed to the specific requirements of these regulations.