User Manual

Read and save theseinstructions before use

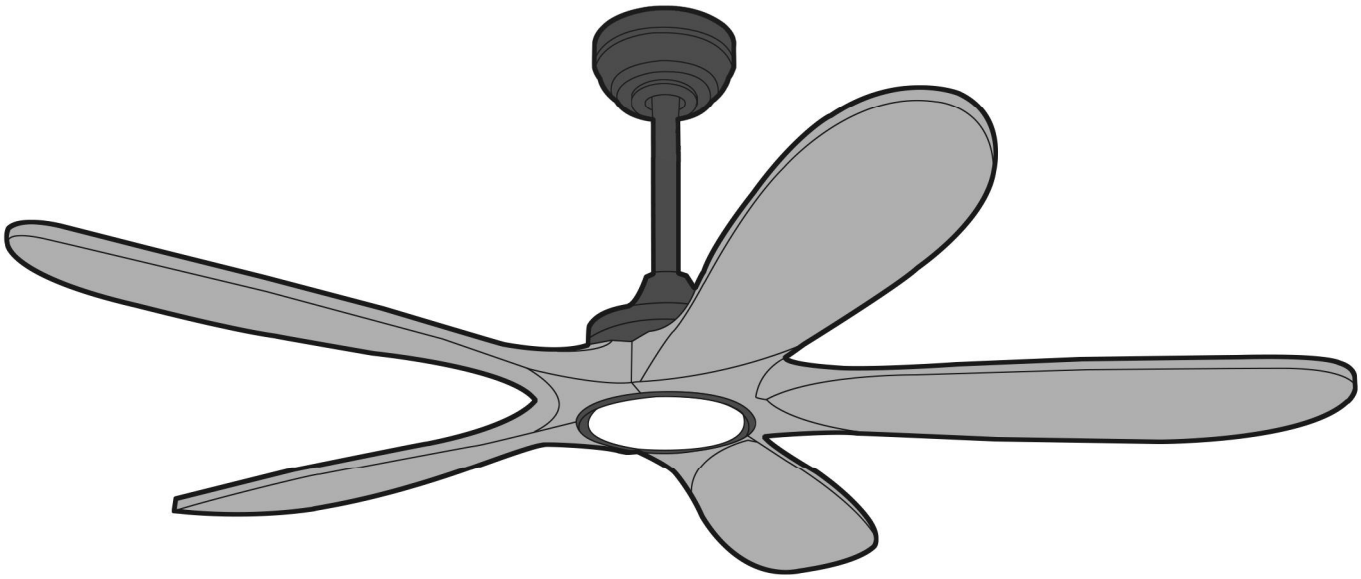

Model# **1170**

SAFETY INFORMATION

Please read and understand this entire manual before attempting to assemble, operate or install the product.

- Before you begin installing the fan, disconnect the power by removing fuses or turning off the circuit breakers.
- Make sure all electrical connections comply with local codes, ordinances, the National Electrical Code and ANSI/NFPA 70-199. Hire an electrician or consult a do-it-yourself handbook if you are unfamiliar with installing electrical wiring.
- Make sure the installation site you choose allows a minimum of 7 feet from the blades to the floor and at least 30 inches from the tip of the blades to any obstruction.
- The weight of the fan is 21.5 pounds.

⚠ **DANGER:** When using an existing outlet box, make sure it is securely attached to the building structure and can support the full weight of the fan. Failure to this can result in serious injury or death. The stability of the outlet box is essential in minimizing wobble and noise in the fan after installation is complete.

⚠ **WARNING:** To avoid personal injury, the use of gloves may be necessary while handling fan parts with sharp edges.

⚠ **WARNING:** Using a full-range dimmer switch to control fan speed will cause a humming sound from the fan. To reduce the risk of fire or electric shock, do NOT use a full-range dimmer switch to control fan speed.

⚠ **WARNING:** To reduce the risk of fire, electric shock or personal injury, mount the fan to an outlet box marked "ACCEPTABLE FOR FAN SUPPORT" and use the mounting screws provided with the outlet box. Most outlet boxes commonly used for the support of lighting fixtures are not acceptable for fan support and may need to be replaced. Consult a qualified electrician if in doubt. Secure the outlet box directly to the building structure. The outlet box and its support must be able to support the moving weight of the fan (at least 35 lbs.).

⚠ **WARNING:** To reduce the risk of fire, electric shock or personal injury, wire connectors provided with this fan are designed to accept only one 12-gauge house wire and two lead wires from the fan. If your house wire is larger than 12-gauge and/or there is more than one house wire to connect to the two fan lead wires, consult an electrician for the proper size wire connectors to use.

⚠ **WARNING:** To reduce the risk of fire, electric shock or personal injury, do not bend the blade arms when installing them, balancing the blades or cleaning the fan. Do not insert objects between the rotating fan blades.

⚠ **WARNING:** To reduce the risk of personal injury, use only parts provided with this fan. The use of parts other than those provided with this fan will void the warranty.

CAUTION: Be sure the outlet box is properly grounded or a ground (green or bare) wire is present.

CAUTION: Carefully check all screws, bolts, and nuts on the fan assembly ensure they are secured.

This equipment has been tested and found to comply with the limits for a Class B digital device, pursuant to Part 15 of the FCC Rules. These limits are designed to provide reasonable protection against harmful interference in a residential installation. This equipment generates, uses and can radiate radio frequency energy and, if not installed and used in accordance with the instructions, may cause harmful interference to radio communications. However, there is no guarantee that interference will not occur in a particular installation. If this equipment does cause harmful interference to radio or television reception, which can be determined by turning the equipment off and on, the user is encouraged to try to correct the interference by one or more of the following measures:

--Reorient or relocate the receiving antenna.

--Increase the separation between the equipment and receiver

--Connect the equipment into and outlet on a circuit different from that to which the receiver is connected.

--Consult the dealer or an experienced radio/TV technician for help.

Please note changes or modifications not expressly approved by the party responsible for compliance could void the user's authority to operate the equipment.

CARE AND MAINTENANCE

At least twice each year, lower the canopy to check the downrod assembly and tighten all screws on the fan. Clean the motor housing and blades with a soft brush or lint-free cloth to avoid scratching the finish.

Important: Shut off the main power supply before you begin any maintenance task. Do NOT use water or a damp cloth to clean the fan.

PREPARATION

Before beginning the assembly of this product, ensure all parts are present. Compare all parts with the package contents list and hardware contents list. If any part is missing or damaged, do not attempt to assemble the product.

Estimated assembly time: 1 hours

Tools required (not included): Electrical tape, Phillips Screwdriver, Safety Glasses, Step Ladder, and Wire Strippers.

1. Turn off power to the fan at the breaker box and the wall switch (Figure 1.1). **DANGER:** Failure to disconnect the power supply prior to installation may result in serious injury or death.
2. Choose one of the following mounting options (Figure 1.2) :
   Standard Mount - best suited for ceilings 12“/17”/21“ .... For very high ceilings, use a longer downrod (5“/10”14“ rod included)
   Angle Mount - best suited for angled or vaulted ceilings. A longer downrod is sometimes necessary to ensure proper blade clearance. Ensure the ceiling angle is not steeper than 13 degrees.
   Flushmount Installation - not available for this model.
   Closemount Installation - best suited for ceilings 8 feet or lower.
3. Choose a suitable location - Ensure the blades will be at least 30 inches from any obstructions. Also check the downrod length to ensure the blades will be at least 7 feet above the floor (Figure 1.3).

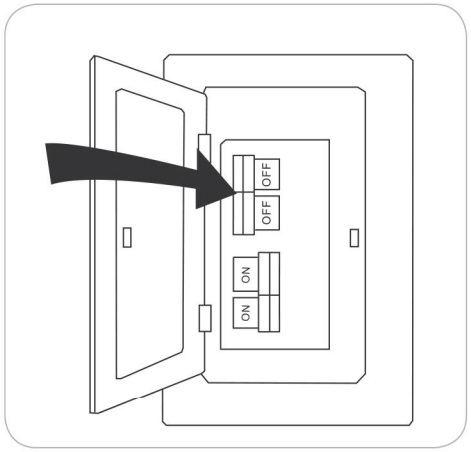

Figure 1.1

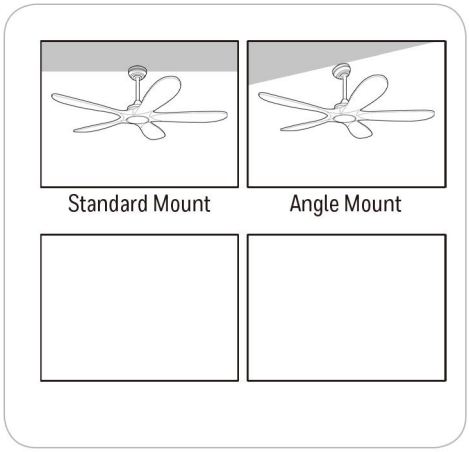

Figure 1.2

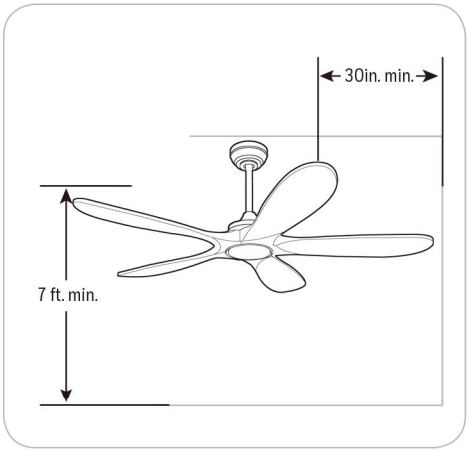

Figure 1.3

INITIAL INSTALLATION

Depending on your room's roof structure: Choose concete ceiling or wooden ceiiing mounting bracket screws (Figure 1.1/ Figure 2.2).

For CLOSEMOUNT INSTRUCTIONS, skip to page 7.

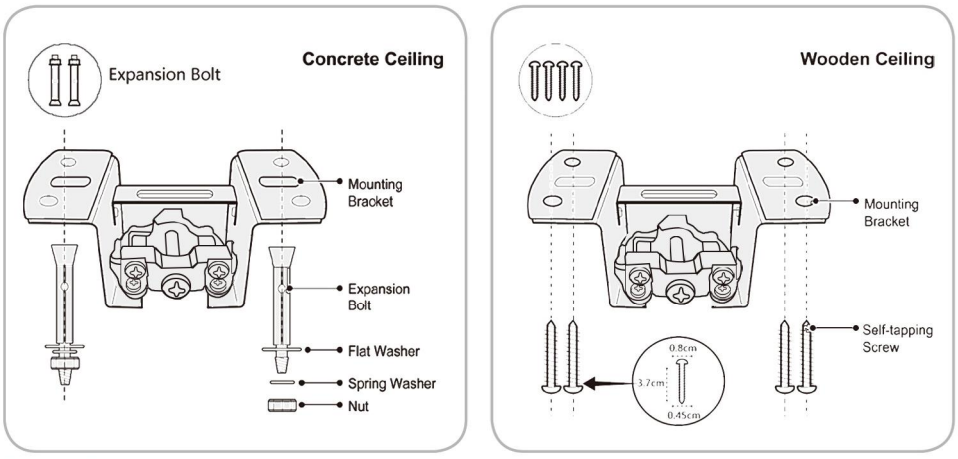

Figure 2.1

PACKAGE CONTENTS

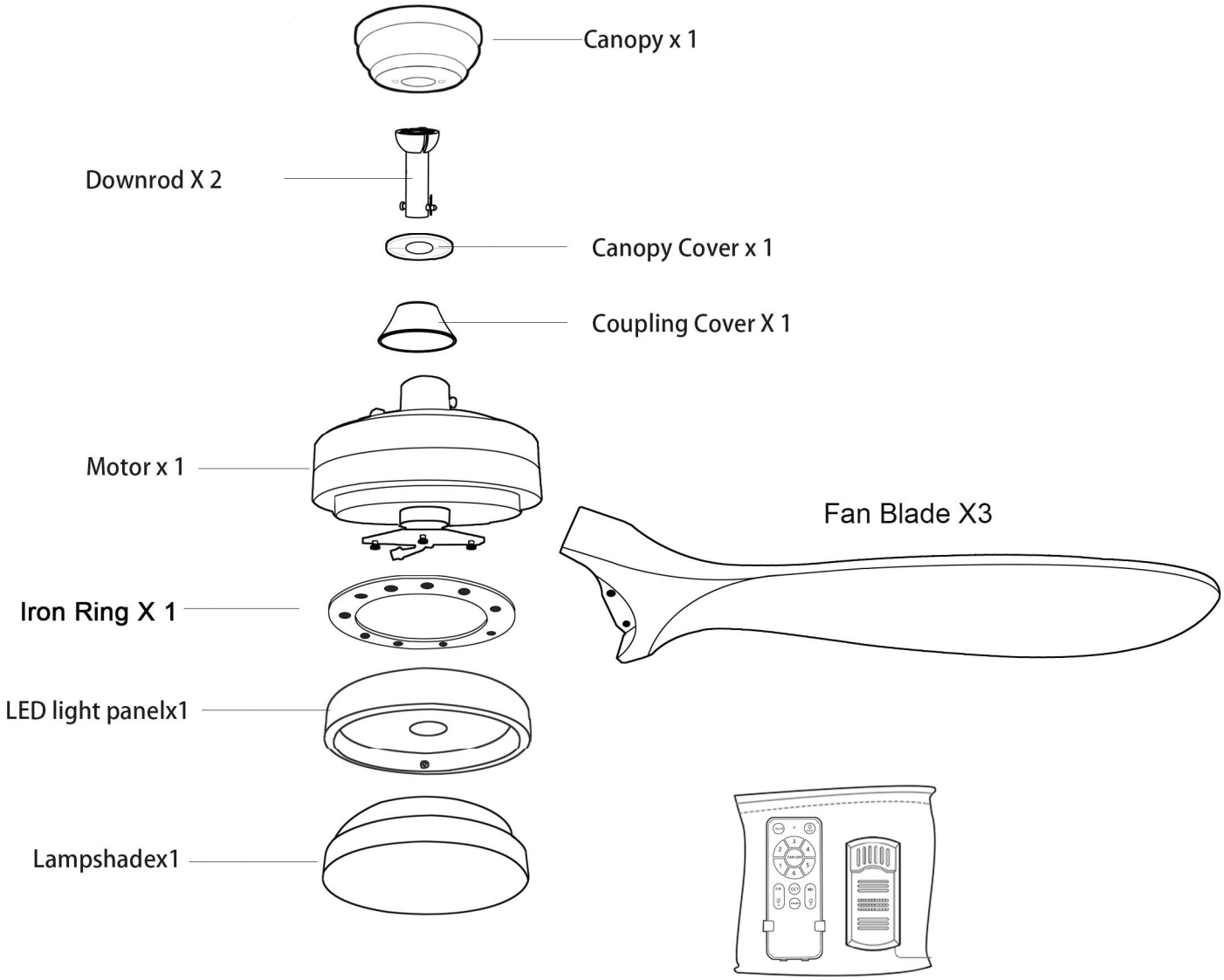

TOOLS REQUIRED



1.Power Drill 2. Screwdriver 3. Step Ladder 4. Wire Stripper 5. Electrical Tape

Parts List

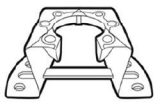

1. Mounting Bracket X 1



2. Canopy X 1

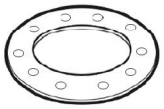

3. Iron Ring X 1



4. Motor X 1



5. Coupling Cover X 1

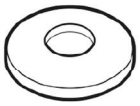

6. Canopy Cover X 1



7. Light Cover X 1

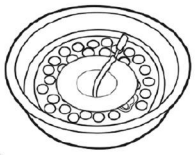

8. LED Board X 1

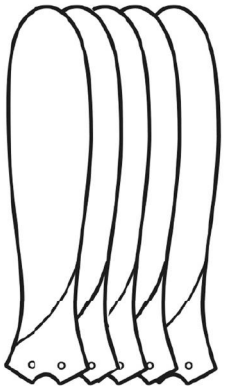

12. Fan Blade X 5

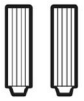

9. Aircraft Cap X 2



10. Downrod X 2



11. Wire Caps Screw Terminals

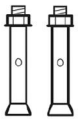

13. Expansion Bolt X 4

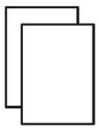

14. Balance Kit X 2

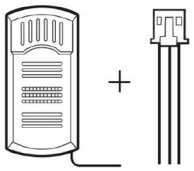

15. Receiver + Power cord X 1

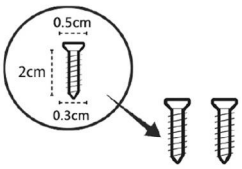

16. Remote Bracket Screw X 2

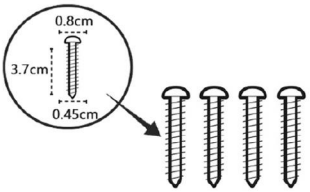

17. Self-tapping Screw X 4

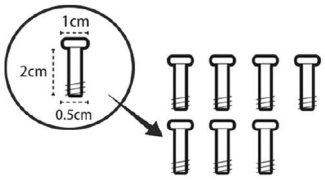

18. Blade Screw X 7

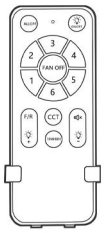

19. Remote Control X 1

Step 1: Fan Blade Installation

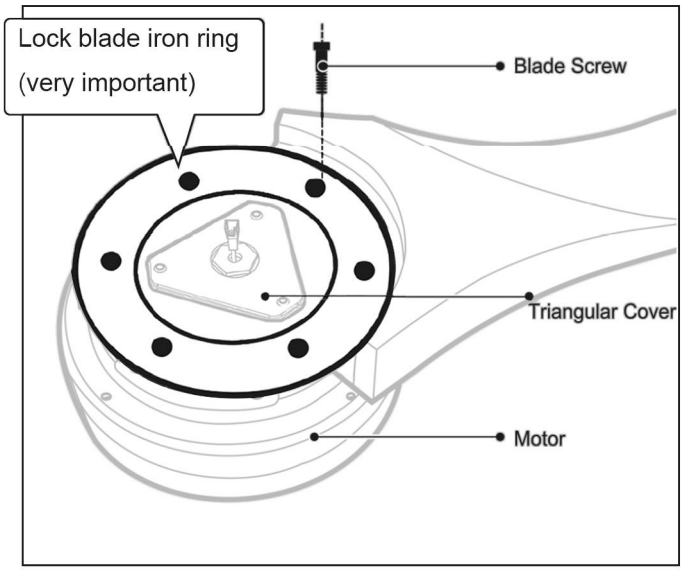

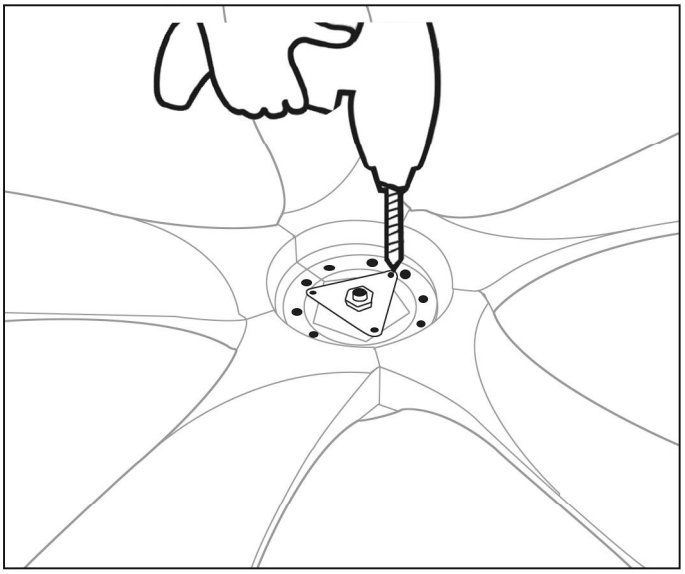

❶ Lock blade iron ring + ceiling fan blades as a combination must be locked together to the motor. (Screws can not be used directly to fix the wood blade, otherwise the mechanical pressure of the screws will cause the partial collapse of the wood blade, and the screws will enter the motor and destroy the motor)

❷ Remove and keep the screws of the upper triangular cover of the motor with an electric drill.

Step 2: LED PanelInstallation

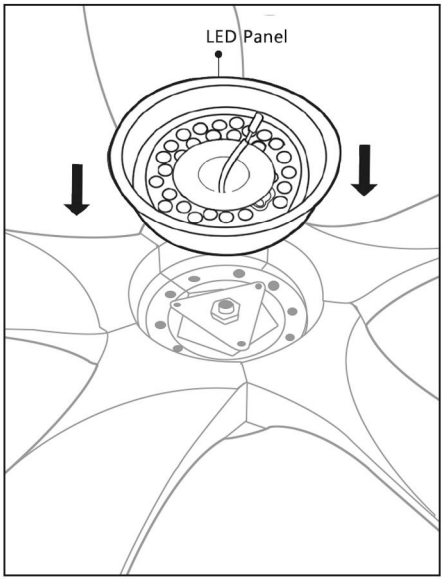

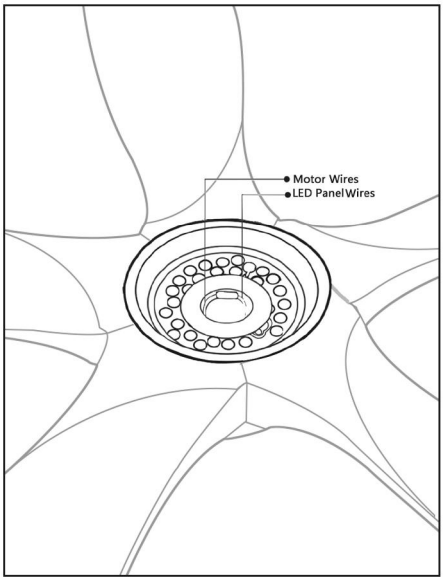

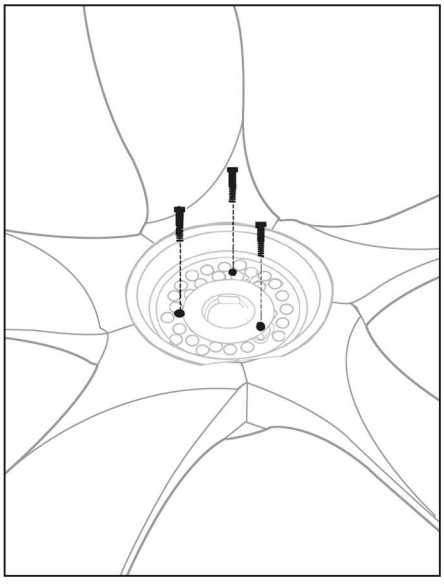

❸ Pass the wires from the motor through the LED panel

❹ Connect the motor Wiresto the LED panel wires.

❺ Secure the LED panel to the triangular cover with the three screws removed in step 2, picture 2.

Step 3 : Downrod Installation

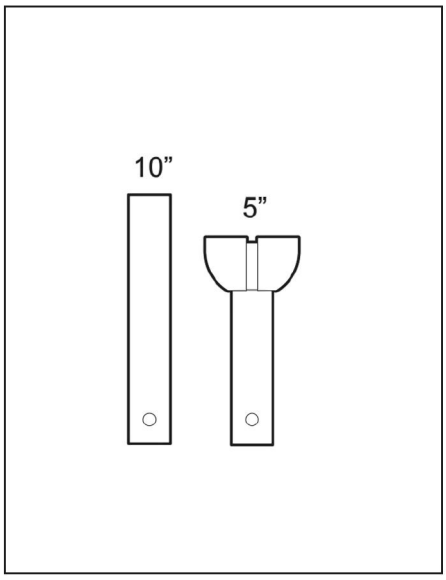

❶ You have three downrods now(5",10") Please choose and install any of them you think is suitable.

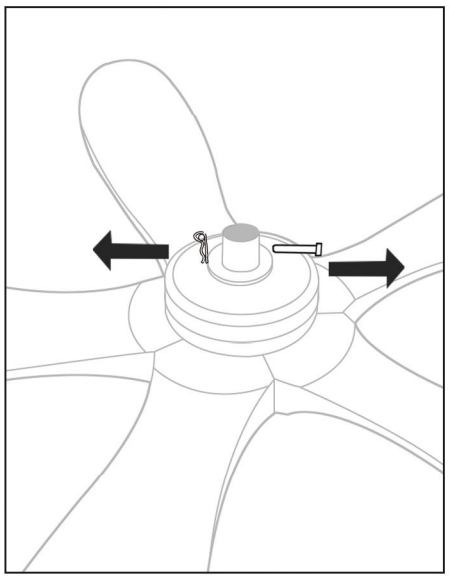

❷ Remove and keep Downrod Pin + Downrod Clip.Special note: Blade end label: THIS SIDE UP- This side of the blade is used to hold and contact the motor (because many customers will put it down, incorrectly install the light)

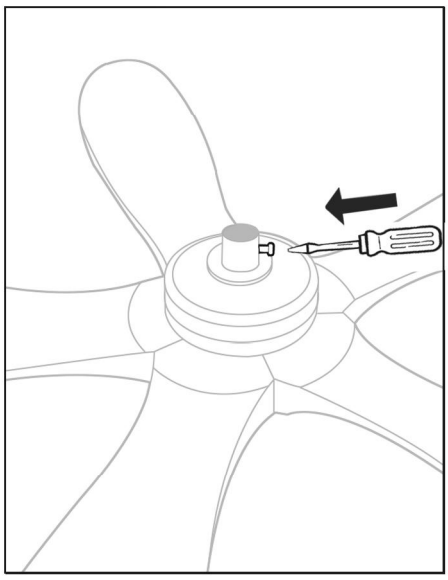

❸ Just LOOSEN the screws on the motor (as the above picture shows)Please note: Just loosen it, do not remove.

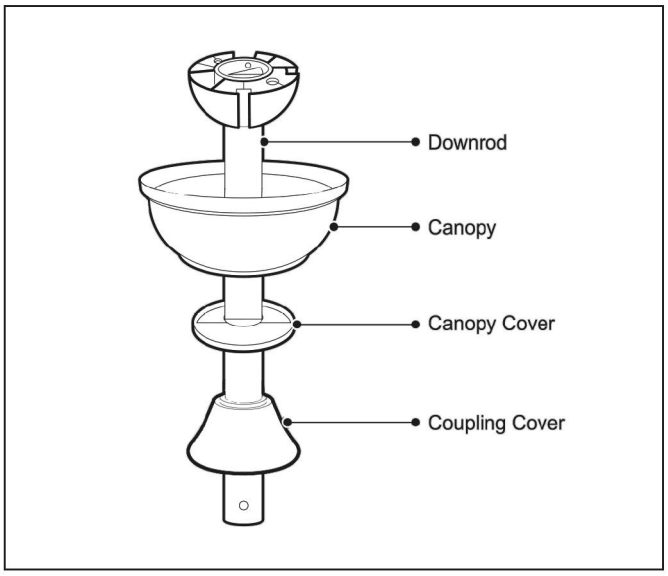

❹ Assemble the canopy, canopy cover and coupling cover to the downrod in turn.

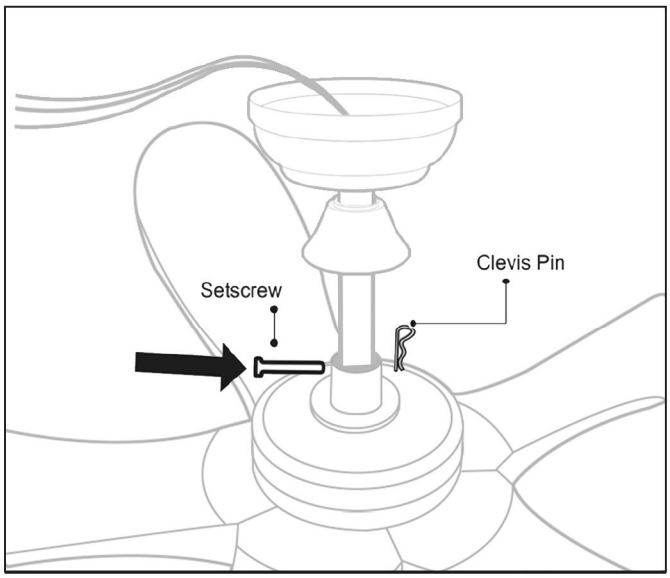

❺ Pass the motor wire through the downrod,lock with the Downrod Pin and Downrod Clip and tighten the motor screws.

Step4: Change Downrod(OPT)

How do I choose the right downrod for my fan?

If the distance between the floor and the ceiling of the room where you plan to install this fan is 100 inches, a 5-inch downrod is suitable.

If the distance between the floor and the ceiling in the room where you plan to install this fan is 110 inches, a 10-inch downrod is perfect.

If the distance between the floor and the ceiling in the room where you plan to install this fan is 120 inches, a 14-inch downrod is the best choice.

If a longer downrod is required, please don't hesitate to contact us:

NOTICE

If the house suitable for installing a 1.5m(590 inches), it should a new controller, Please contact us for customization

If you need to change different length downrod, please follow these steps:

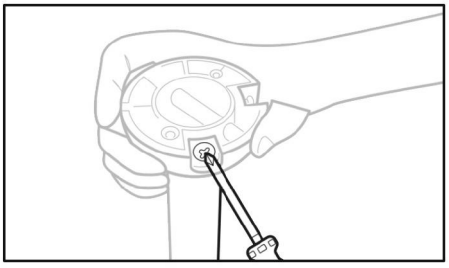

1 Loosen the screws on the hanging ball.

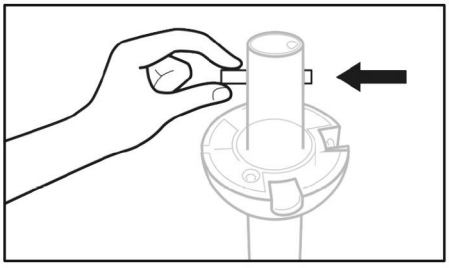

2 Remove the metal bar.

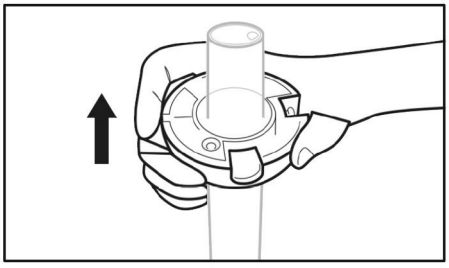

3 Take off the hanging ball from the original downrod.

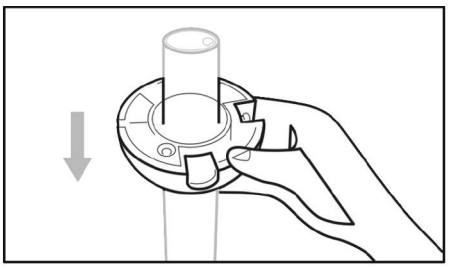

4 Install the hanging ball to an appropriate downrod.

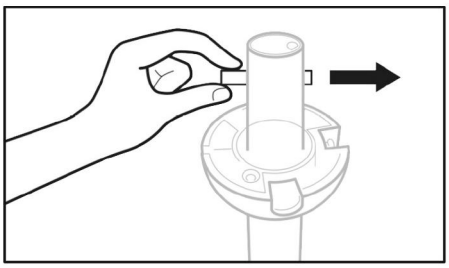

5 Insert the metal bar .

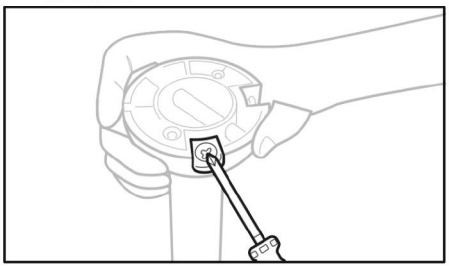

6 Tighten the screws.

Step5: Wiring Instruction

⚠ To prevent accidents such as fire or electric shock during installation, please shut off the fuse box or circuit breaker before installing the fan.

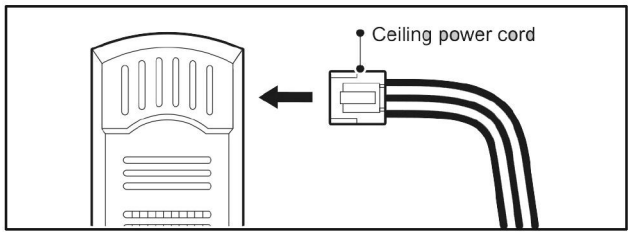

1 Connect the ceiling power cord to the receiver.

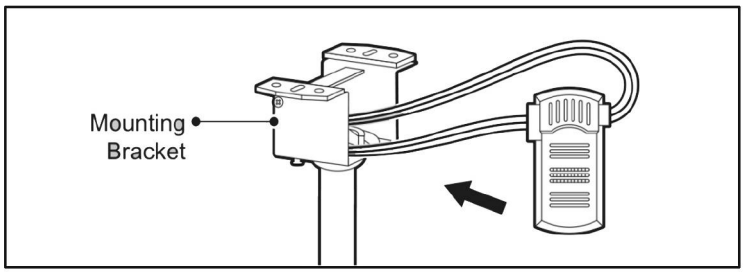

3 Put the receiver into the mounting bracket.

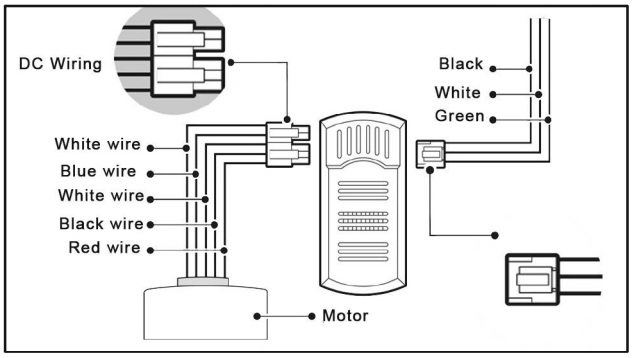

2 The receiver is connected to the motor power cord and the ceiling power cord respectively.

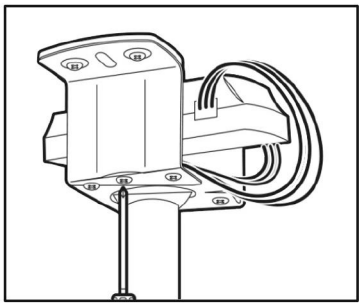

4 Cover the receiver and power cord and tighten the screws.

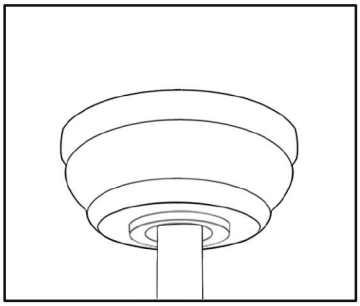

5 Decorative cover on, rotate, tighten

Note:
Connect wires color to color, plug to plug.

L Live Wire

N Neutral Wire

Ground Wire

Step6 : The Lampshade Installation

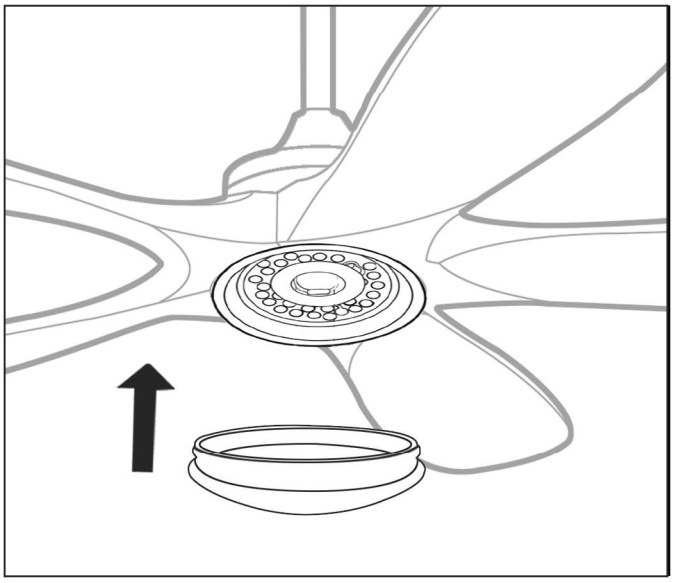

1 Put the light cover to the LED Panel

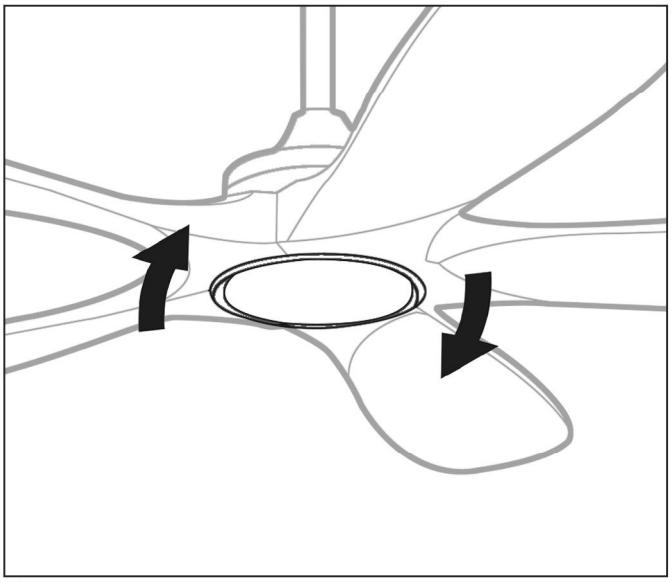

2 Spin forward to tighten the light cover.

Step7: Installation of the Assembled Fan

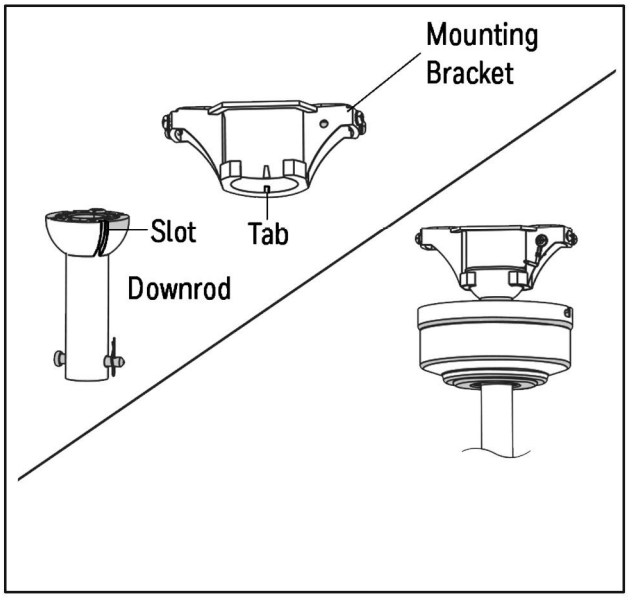

1 Install the ball end of the downrod into the opening of the mounting bracket .

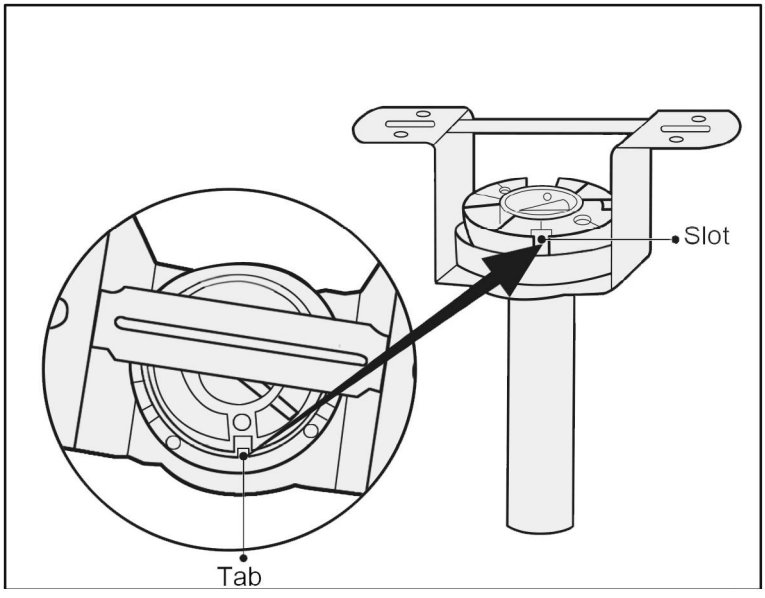

2 WARNING: Failure to align the slot in the ball with the tap on the mounting bracket may cause the fan to fall, which could result in injury or death.

REMOTE CONTROL INSTRUCTIONS

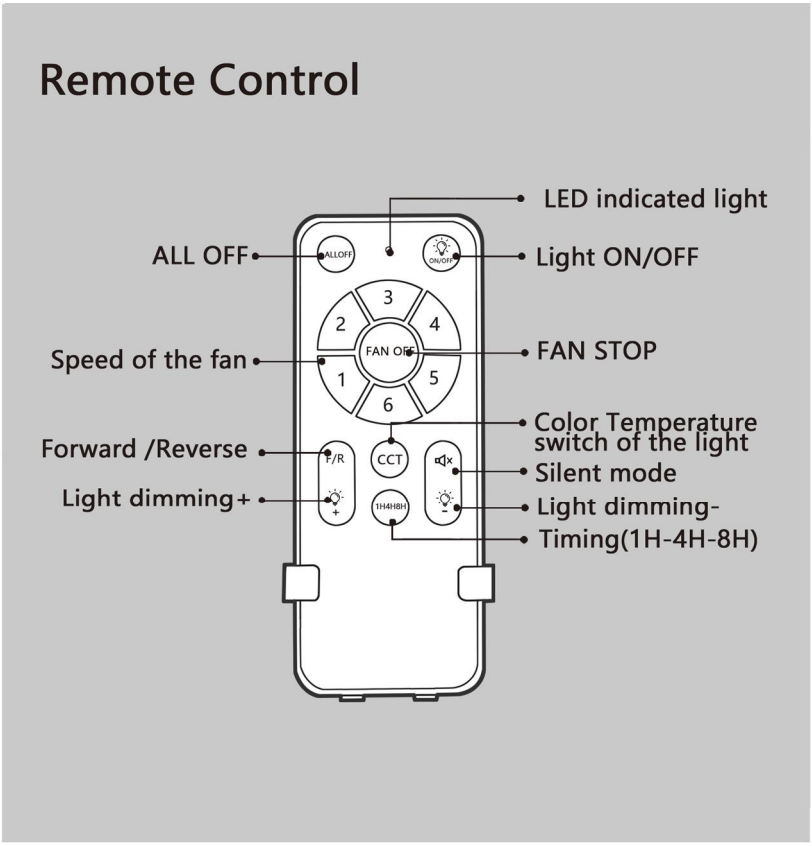

OPERATING TRANSMITTER:

Press and hold the"ALL OFF"and Light "on/off" button on the remote control, Turn on the power switchbeep, hear two beeps,if the pairing is not successful,please wait for 3 minutes and try again.

Warning Sign

Remote control can not be effectively controled please check the batery long-term non-use please remove the battery.

Note: Sensing Distance: 33 ft - 49 ft (10 m - 15 m) Diection of the fan / Reverse Switch

Reversible Function

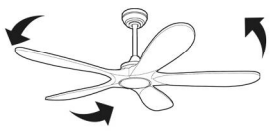

Summer (Forward):
In warmer weather, push the reverse switch left which results in downward airflow creating a wind chill effect.

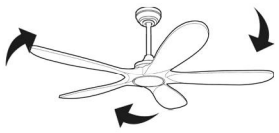

Winter (Reverse):
In cooler weather, push the reverse switch right which results in upward airflow that will help move hot air of the ceiling。

PS: If you want to change its rotate direction, please press the button "Forward/Reverse" on the remote control .while the fan is running.

Timing Control

SPECIFICATIONS

Product Name	52” Ceiling Fan	Lamp configuration	18 W (LED)
Rated Voltage	120V-240V	Lampshade Size	φ150mm
Motor Power	DC 32 W	Motor Spec	153*10mm
control method	Remote Control	Fan blade	5 solid wood fan blades

TROUBLESHOOTING

If you experience any faults, please check the Troubleshooting section below. If a problem cannot be remedied or you are experiencing difficulty in installation, please contact Customer Service:

Warning: Shut off the power supply before you begin any maintenance task.

PROBLEM	CORRECTIVE ACTION
The fan does not move.	1. Firmly push the reverse switch completely left or right. 2. Make sure the wall switch is turned on. 3. Turn the power on or check the fuse (breaker). 4. Turn the power off and check all connections at the ceiling outlet box.
The fan is noisy.	1. Check and tighten all screws that hold the fan blades to the blade arms and the motor. 2. Replace the cracked blade. 3. Do not use a full range dimmer switch to control the fan speed. 4. Ensure the outlet box is secured to the building structure. 5. Ensure the mounting bracket is secured to the outlet box and that the screws are tight.
The fan wobbles excessively.	1. Check and tighten all screws that hold the fan blades to the blade arms and the blade arms to the motor. 2. Switch one blade with a blade from the opposite side, or balance the fan using the blade balancing kit. 3. Turn off the power. Loosen the canopy and verify that the mounting bracket is secure to the electrical outlet box. The bracket must be flush without movement against the outlet box. Verify the outlet box is secure. 4. Use a longer downrod (sold separately) or move the fan to another location. 5. Lift up the yoke cover and tighten the set screws on the yoke until secure.
The fan operates correctly but the lights are not working.	1. Ensure the single-pin connectors are properly secured. 2. Turn the power off and check all connections at the ceiling outlet box.
Remote control does not work.	1. Turn off the main power, then turn it back on. Within 30 seconds, press and hold the high and low speed buttons on the remote at the same time for 5 seconds. The LED indicator will flash 3 times, signaling a successful synchronization. Once complete, the fan will start on the low speed with the light (if applicable) off. 2. Insert new 12V battery in battery compartment of the remote control. 3. If there are several fans in close proximity, turn power off to other fans and re-sync the remote.

THE MOTOR MUST HAVE THE BLADES INSTALLED FIRST OR THE FAN WILL NOT RUN PROPERLY.

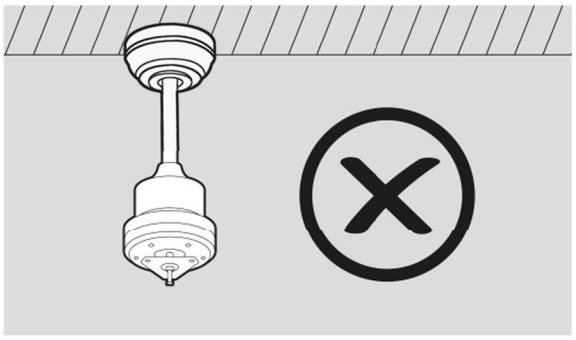

CAN'T RUN NORMALLY

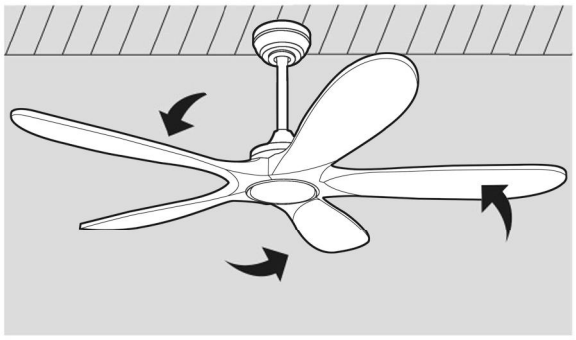

NORMAL RUN

End of Blessings

Congratulations, the installation is perfectly completed, and now you can start using the remote control to enjoy the beautiful fan and lighting. We believe that our ceiling fans can bring you a great experience~
Of course, if you encounter any problems or have any questions, please feel free to contact us at any time, and we will do our best to provide you with the best service.
May your life be happy every day!