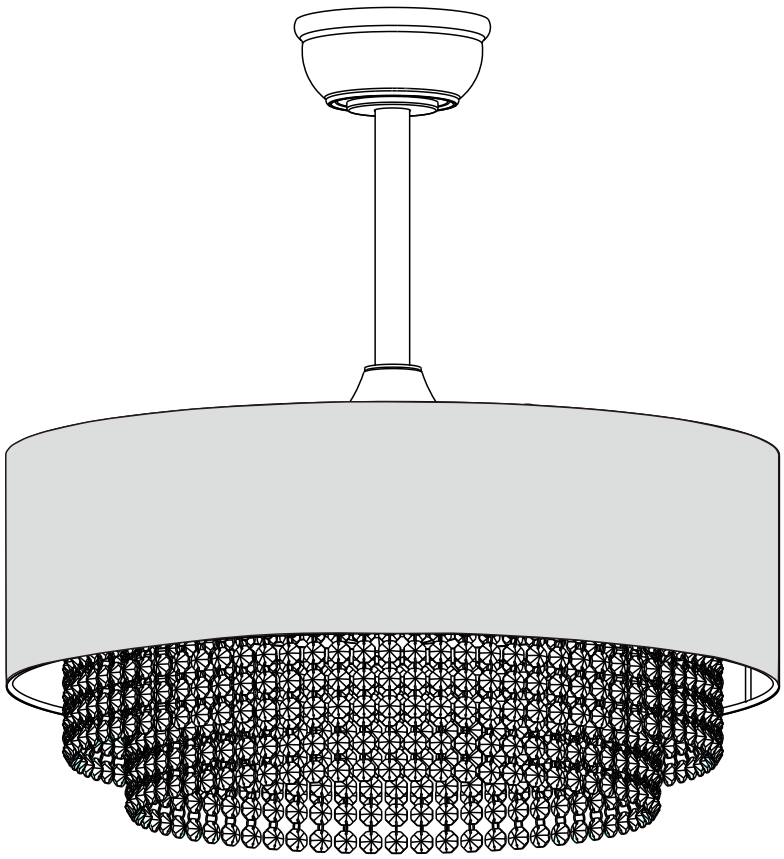

USE AND CARE GUIDE

CEILING FAN

GET MORE SUPPORT

Should you experience any issues while installing and operating any of our products, you can directly reach out our Customer Support Via Amazon Order or you can send your inquiry to our Official Customer Support at **oursfan@outlook.com**

01 Safety Information

1. To reduce the risk of electric shock, ensure the electricity has been turned off at the circuit breaker or fuse box before you begin.

2. All wiring must be in accordance with the National Electrical Code ANSI/NFPA 70-1999 and local electrical codes. Electrical installation should be performed by a qualified licensed electrician.

3. The outlet box and support structure must be securely mounted and capable of reliably supporting 35 lbs. (15.9 kg). Use only UL Listed outlet boxes marked "Acceptable for Fan Support of 35 lbs. (15.9 kg) or less".

4. The fan must be mounted with a minimum of 7 ft. (2.1 m) clearance from the trailing edge of the blades to the floor.

5. Do not operate the reversing switch while the fan blades are in motion. You must turn the fan off and stop the blades before you reverse the blade direction.

6. Do not place objects in the path of the blades.

7. To avoid personal injury or damage to the fan and other items, use caution when working around or cleaning the fan.

8.Electrical diagrams are for reference only. Light kits that are not packed with the fan must be Ul–listed and marked suitable for use with the model fan you are installing. Switches must be UL General Use Switches. Refer to the instructions packaged with the light kits and switches for proper assembly.

9. After making electrical connections, spliced conductors should be turned upward and pushed carefully up into the outlet box. The wires should be spread apart with the grounded conductor and the equipment–grounding conductor on one side of the outlet box.

10. All setscrews must be checked and re–tightened where necessary before installation.



WARNING: To reduce the risk of personal injury, do not bend the blade brackets (also referred to as flanges) during assembly or after installation. Do not insert objects in the path of the blades.



WARNING: Remove the rubber motor stops on the bottom of the fan before installing the blades or testing the motor.



WARNING: To reduce the risk of fire or electric shock, this fan is NOT suitable for use with solid-state speed controls.



WARNING: To avoid possible electrical shock, make sure that the electricity is turned off at the main power box before starting work. If you feel you do not have enough electrical wiring knowledge or experience, contact a licensed electrician.



WARNING: Electrical diagrams are for reference only. Optional use of any light kit shall be UL-listed and marked suitable for use with this fan



WARNING: To reduce the risk of fire, electrical shock or personal injury, ensure that the fan mounting bracket is supported directly from the building structure or the outlet box marked "Acceptable for Fan Support of 35 lbs. (15.9 kg) or less". Use only the screws provided with the outlet box.

02 Warranty

The supplier warrants the fan motor to be free from defects in workmanship and material present at time of shipment from the factory for a lifetime after the date of purchase by the original purchaser. The supplier also warrants that all other fan parts, excluding any glass or acrylic blades, to be free from defects in workmanship and material at the time.

of shipment from the factory for a period of two years after the date of purchase by the original purchaser. We agree to correct such defects without charge or at our option replace with a comparable or superior model if the product is returned.

To obtain warranty service, you must present a copy of the receipt as proof of purchase. All costs of removing and re-installing the product are your responsibility. Damage to any part such as by accident, misuse, improper installation, or by affixing any accessories, is not covered by this warranty.

Because of varying climatic conditions this warranty does not cover any changes in brass finish, including rusting, pitting, corroding, tarnishing, or peeling. Brass finishes of this type give their longest useful life when protected from varying weather conditions. A certain amount of "wobble" is normal and should not be considered a defect.

Servicing performed by unauthorized persons shall render the warranty invalid. There is no other express warranty. Sofucor hereby disclaims any and all warranties, including but not limited to those of merchant ability and fitness for a particular purpose to the extent permitted by law. The duration of any implied warranty which cannot be disclaimed is limited to the time period as specified in the express warranty. Some states do not allow a limitation on how long an implied warranty lasts, so the above limitation may not apply to you.

The retailer shall not be liable for incidental, consequential, or special damages arising out of or in connection with product use or performance except as may otherwise be accorded by law. Some states do not allow the exclusion of incidental or consequential damages, so the above exclusion or limitation may not apply to you. This warranty gives specific legal rights, and you may also have other rights which vary from state to state. This warranty supersedes all prior warranties. Shipping costs for any return of product as part of a claim on the warranty must be paid by the customer.

03 Pre-Installation

TOOLS REQUIRED

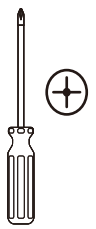

Phillips screwdriver



Flat blade screwdriver

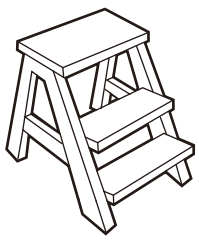

Step ladder



Wire stripper

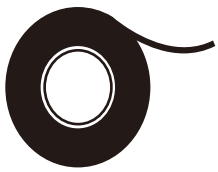

Electrical tape

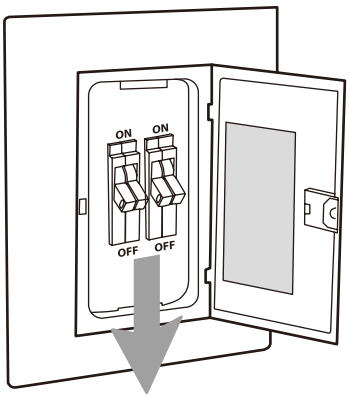

Before you begin installing the fan, Switch power off at Service panel and lock service disconnecting means to prevent power from being switched on accidentally. When the service disconnecting means cannot be locked, securely fasten a warning device, such as a tag, to the service panel.

04 Pre-Installation(continued)

HARDWARE INCLUDED

components table

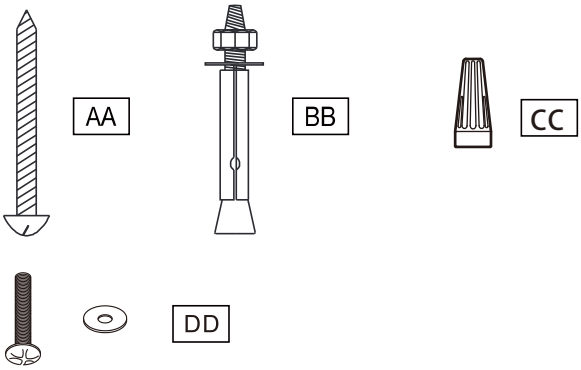

NOTE:Hardware not shown to actual size.

AA	**Mounting screws**	4
BB	**Expansion Bolts**	4
CC	**Plastic wire nut(not to scale)**	3
DD	**Mounting screws and cushion(Outlet box)**	2



Mounting bracket X 1



Coupling cover X 1

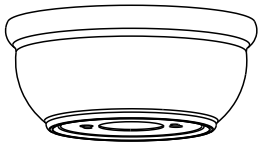

Canopy X 1

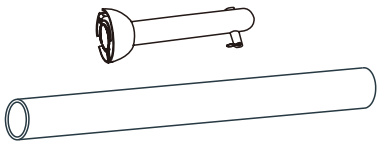

12.5 CM Ball / downrod assembly X 1
25 CM Ball / downrod assembly X 1

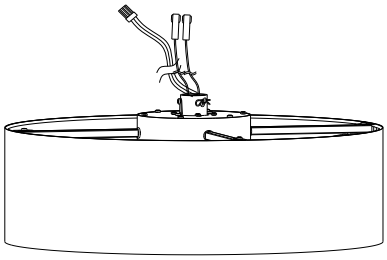

FanX1

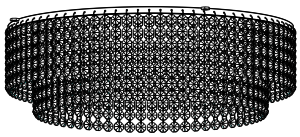

Crystal CircleX1

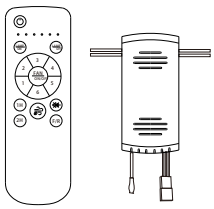

Remote control and receiver X 1

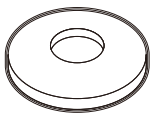

Canopy Cover X 1

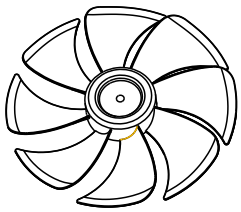

Fan blade X1

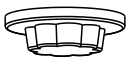

Fan cover X1

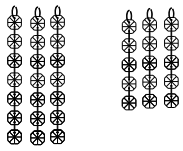

Crystal string A X3
Crystal string B X3
(spare parts)

05 Installation of the hanging brackert(suspension part)

Wooden ceiling

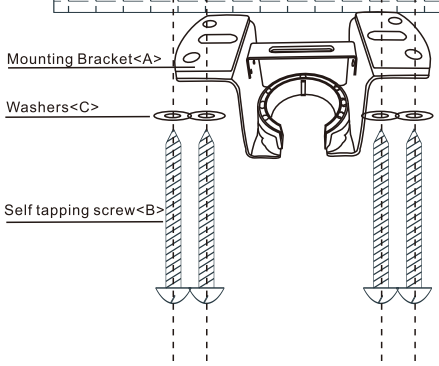

For wooden ceiling, use wood screw to drill on the wooden beam or the “junction box” to fix the hanging bracket (selection is made according to actual requirements of the customers).

STEP 1A-WOODEN CEILING

SWITCH OFF THE ELECTRICAL MAINS AT THE CIRCUIT BREAKER FUSE BOX.

1)Use the Mounting Bracket (A) as a guide, mark the spots where the 4 Self Tapping Screws (B) will be drilled.
2)Remove the Mounting Bracket (A), drill 4 holes for 3MM diameter, install the mounting bracket onto wooden ceiling with the 4 Self Tapping Screws (B) & Washers (C).

⚠ **IMPORTANT : SCREWS MUST BE TIGHTENED TILL SNUG**

CONCRETE CEILING

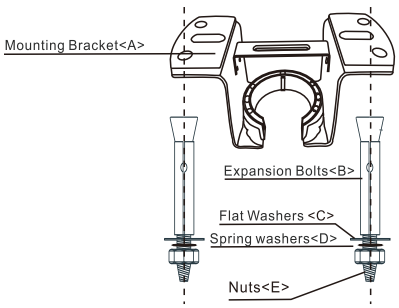

⚠ Note: According to the ceiling of different materials, use different screws to fix the hanging bracket. Don’t fix the hanging bracket on the wood ceiling less than 12MM to prevent danger caused by loosening of screws.
After the hanging bracket is completed, ensure that it can withstand the tension test of more than 68KG for safety.

For concrete ceiling, use the percussion bit with diameter 8mm to drill holes according to the length of expansion screws. Then use the attached expansion screws to fix the hanging bracket onto the ceiling (selection is made according to actual requirements of the customers).

STEP 2A－CONCRETE CEILING

SWITCH OFF THE ELECTRICAL MAINS AT THE CIRCUIT BREAKER FUSE BOX.

1)Use the Mounting Bracket (A) as a guide, mark the spots where the 4 Expansion Bolts (B) will be drilled.
2)Remove the Mounting Bracket (A), drill 4 holes and insert 4 Expansion Bolts (2) into the concrete ceiling, install the mounting bracket and secure with Flat Washers (C), Spring Washers (D) and Nuts (E).

IMPORTANT : SCREWS & NUTS MUST BE
⚠ **TIGHTENED TILL SNUG**

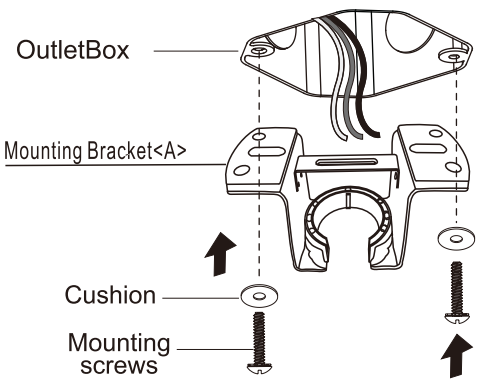

Tighten the Mounting Bracket<A> to the outlet box with 2 mounting screws. (To reduce the risk of fire, electric shock, or personal injury, mount to the outlet box marked “Acceptable for fan support” and use mounting screws provided with the outlet box.)

06 Install the hanging part of the ceiling fan.

Install downrod assembly

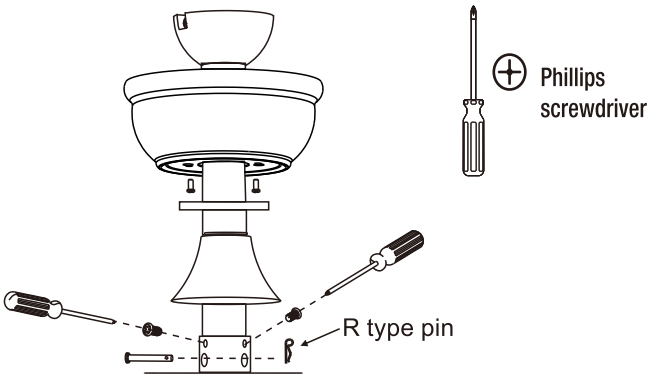

1. Thread the suspender through the suspended clock and coupling cover.
2. Then insert the tail of the suspender from the lifting head of the motor.
3. Remove the lateral pin out from the suspended head position, secure with R type pin(Clevis pin).
4. Tighten the lifting head screws. Tighten the 2 Set Screws on the Coupling to serve as a clamping force on the Downrod to prevent fan shaking during operation.
5. Route the Coupling cover , Canopy Ring , Canopy and Hanger Ball through the Downrod in turn, and then install the Lock pin through the hole on the Downrod. Fix it by Screw, then slip down the Coupling Cover in correct position.

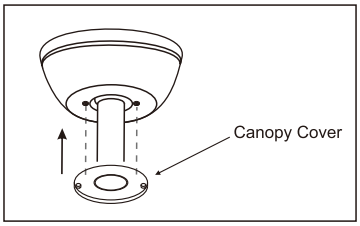

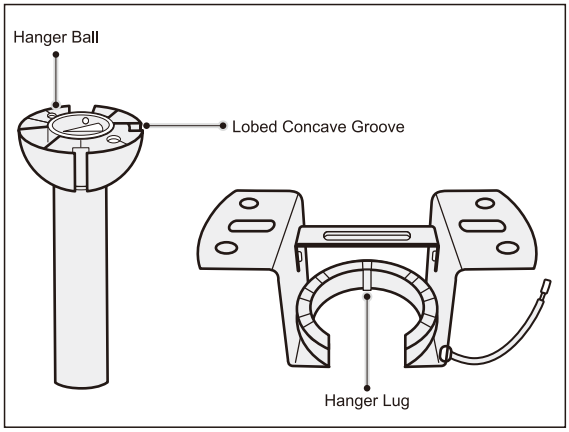

❶ Lift the assembled fan onto the mounting bracket.

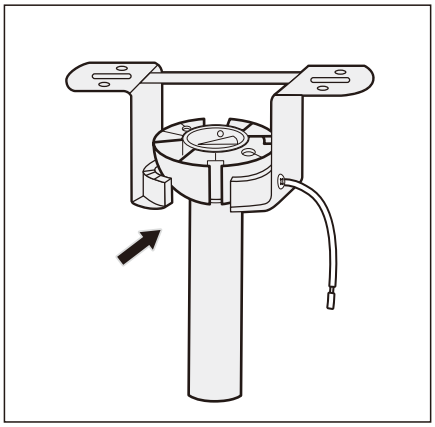

❷ Ensure the concave groove of the hanger ball is positioned on the hanger lug of the mounting bracket.

Change Downrod(OPT)

How to choose different lengths of downrod

1. The ceiling of the house is 100 inches from the ground, suitable for installing a 5-inch downrod.
2. The ceiling distance of the house is 110 inches, which is suitable for installing a 10-inch downrod.
3. The ceiling of the house is 120 inches from the ground, which is suitable for installing a 14-inch downrod.
4. If the space requires a longer boom, you will need to use a longer extension wire, the wire thickness should be selected close to the motor wire thickness, too thick or too thin (changing the resistance required by the receiver), the motor may not work.

NOTICE

If the house suitable for installing a 1.5m(590 inches), it should a new controller, Please contact us for customization

If you need to change different length downrod, please follow these steps:

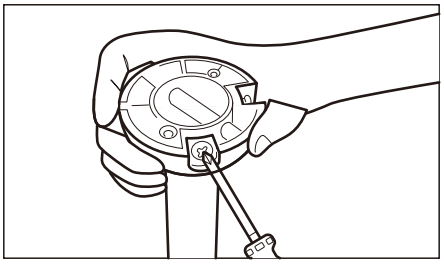

❶ Loosen the screws on the hanging ball.

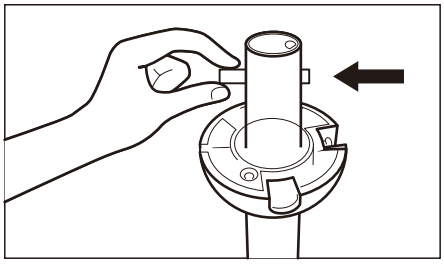

❷ Remove the metal bar.

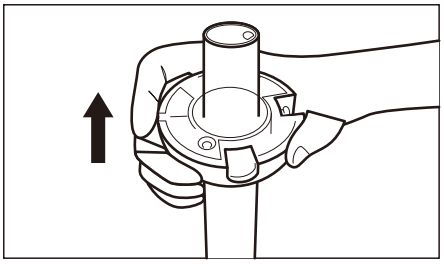

❸ Take off the hanging ball from the original downrod.

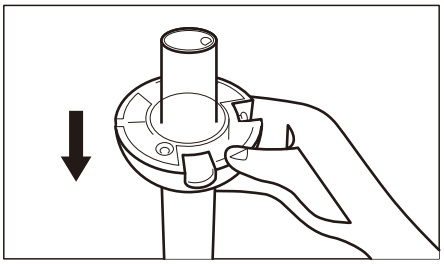

❹ Install the hanging ball to an appropriate downrod.

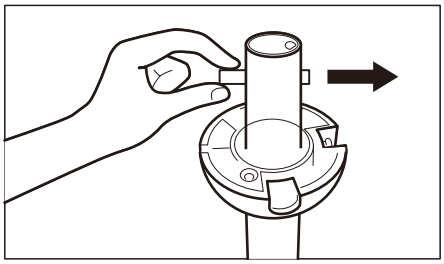

❺ Insert the metal bar .

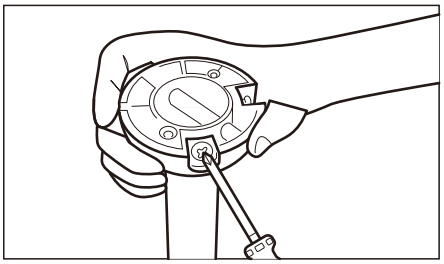

❻ Tighten the screws.

07 Connect the power cord

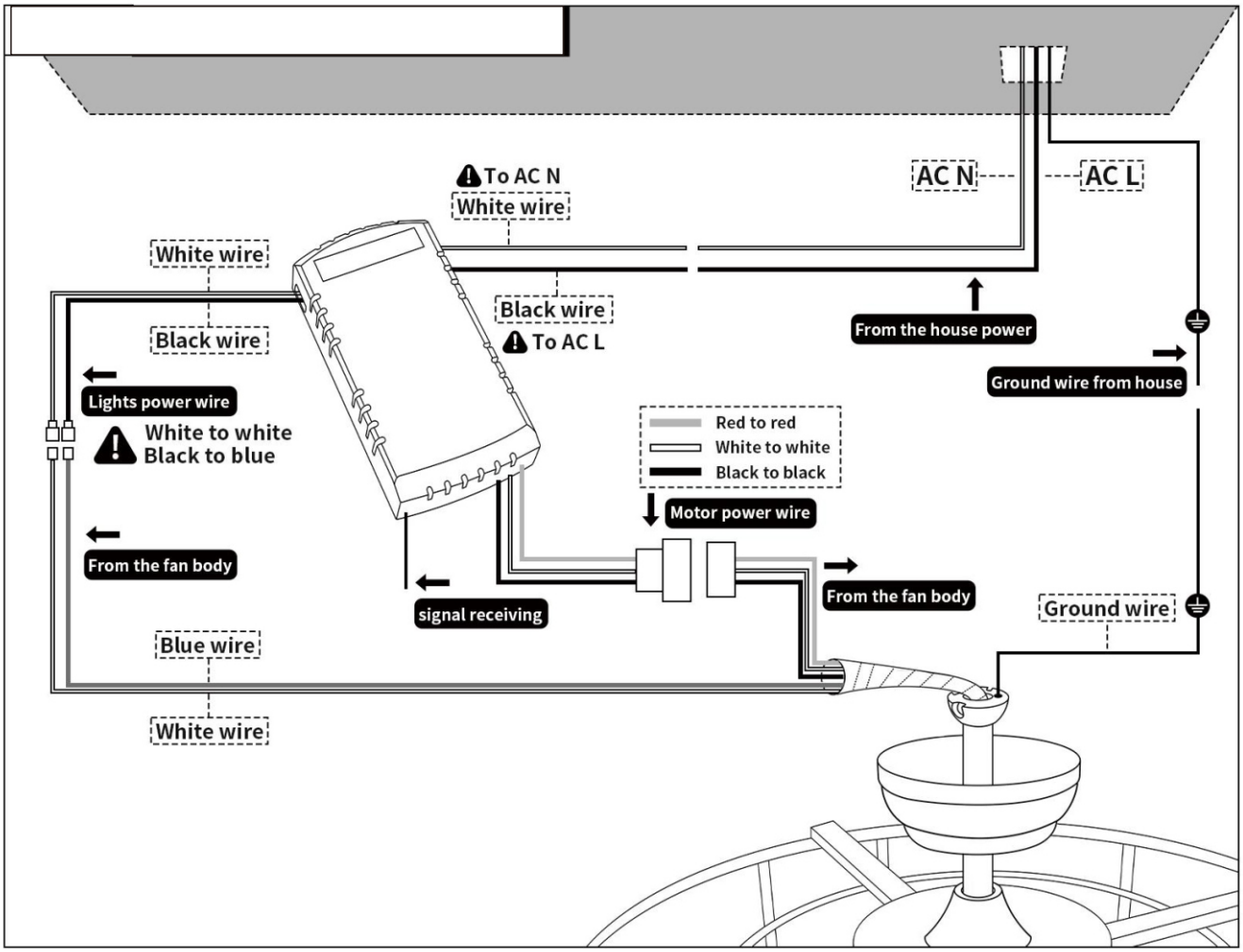

08 Assembly – Hanging the Fan(continued)

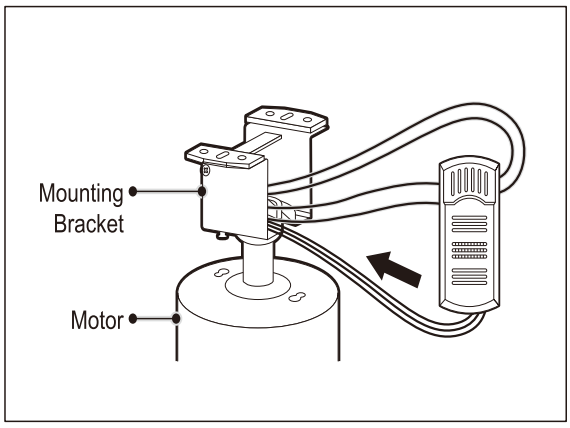

❶ Put the receiver into the mounting bracket.

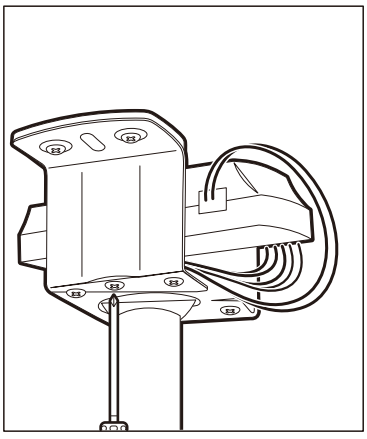

❷ Cover the receiver and power cord and tighten the screws.

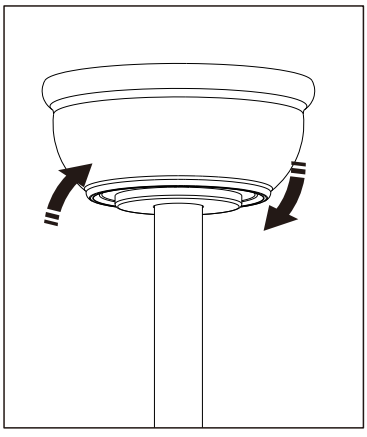

❸ Decorative cover on, rotate, tighten .

09 Assembly – Hanging the Fan

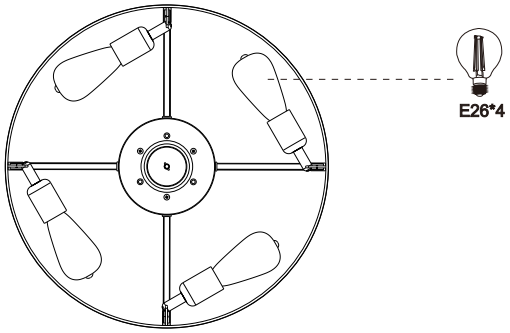

1. Install the bulb (Not included) on the lamp holder.

Note: Select a bulb that matches the size of the light fixture

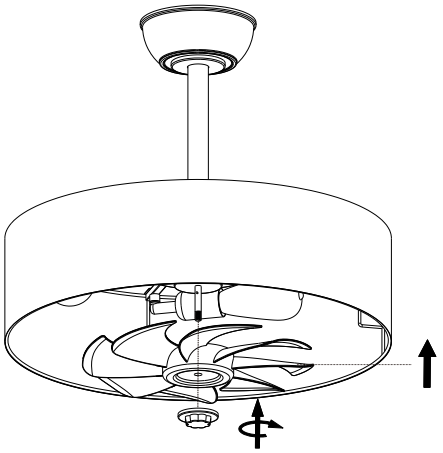

2. Tighten the fan blade to the motor shaft with the fan blade cover.

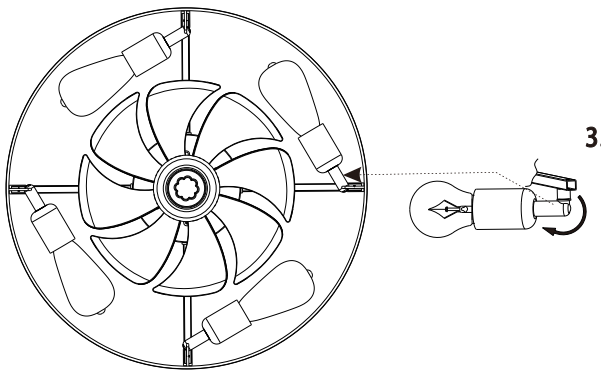

3. Gently rotate the fan blades, If the blades touch the light bulb, adjust the swivel head as shown in the figure to ensure the bulb does not come into contact with the fan blades.

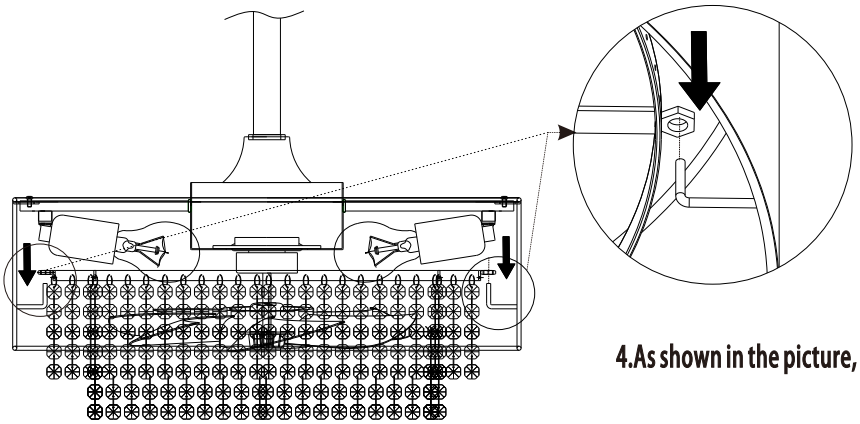

4. As shown in the picture, hang the Crystal Circle onto the fan lamp body.

10 Use of remote control

2.4G DC Fan Lamp Controller Specifications

Product Introduction:

This product uses 2.4G wiroless digital remote control technology, remote control one-to-one control, simple and convenient operation, strong anti-interference abllity.

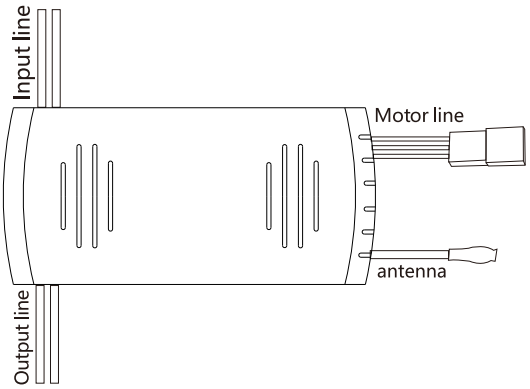

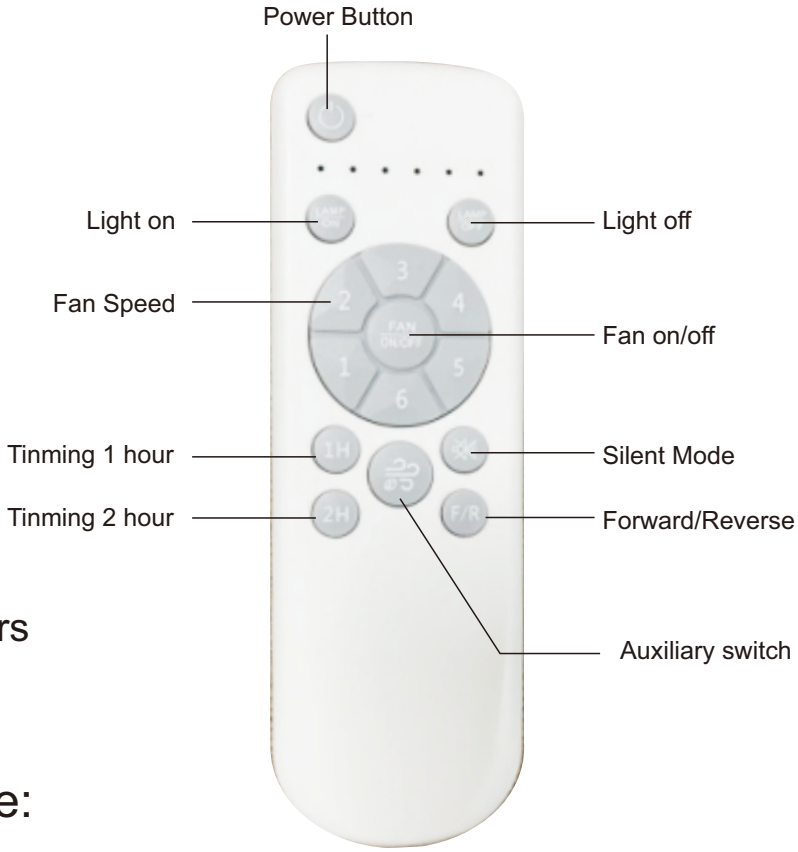

Technical Parameters:

Model: 2.4G DC fanlight controller

6 Speed
Timing: 1 hour/2 hours
Receiving method:RF2.4G
Remote control distance: 8-20 meters
Remote control battery:AAA 1.5V×2

Remote control matching code:

Turn on the power.
Press and hold the light key for 5 seconds.
Beep or flash = pairing successful.

If you need to pair again:
Wait 30 seconds after power off, then repeat.

CAUTION:
The electronic switch is not an isolated product and needs to be operated by professional personnel during installation
The dlectronic switch is triggered by the remote control,and the wireless frequency of the remote control transmitter ls **2.4GHz.**

M/P APP

11 Care and Cleaning

WARNING: Make sure the power is off before cleaning your fan.

- Because of the fan's natural movement, some connections may become loose. Check the support connections, brackets, and blade attachments twice a year. Make sure they are secure. It is not necessary to remove the fan from the ceiling.
- Clean your fan periodically to help maintain its new appearance over the years. Do not use water when cleaning, as this could damage the motor, or the wood, or possibly cause an electrical shock. Use only a soft brush or lint-free cloth to avoid scratching the finish. The plating is sealed with a lacquer to minimize discoloration or tarnishing.
- You can apply a light coat of furniture polish to the wood for additional protection and enhanced beauty. Cover small scratches with a light application of shoe polish.
- You do not need to oil your fan. The motor has permanently-lubricated sealed ball bearings.

12 Troubleshooting

Problem	Solution
The fan will not start.	☐ Check the main and branch circuit fuses or breakers. ☐ Check the line wire connections to the fan and switch wire connections in the switch housing.
The fan is noisy.	☐ Ensure all motor housing screws are snug. ☐ Ensure the screws that attach the fan blade bracket to the motor hub are tight. ☐ Ensure the wire nut connetions are not ratting against each other or the interior wall of the switch housing. ☐ Allow a 24−hour "breaking in" period. Most noises associated with a new fan disappear during this time. ☐ If you are using the Ceiling Fan light kit,ensure the screws securing the glassware are tight.Check that the light ☐ bulbs are also secure. ☐ Ensure the canopy is a short distance from the ceiling.It should not touch the ceiling. ☐ Ensure your outlet box is secure and rubber isolator pads wereused between the mounting plate and outlet box.

CAUTION

Read instructions carefully for safe installation and fan operation. If unsure consult a qualified electrician

THANK YOU FOR YOUR PURCHASE

Thank you for purchasing this quality product. To ensure correct function and safety, please read and save all instructions before using the product

---

LIGHT FAN THE BEST PARTNER OF AIR CONDITIONER & AIR PURIFIER

Many people believe that fans are only used during the summer, but they actually serve a greater purpose in speeding up indoor air circulation. For instance, when using an air conditioner in the summer, improper installation or a low-power unit can result in uneven temperature distribution in a room. This is where a fan comes in handy—it helps move hot and cold air around, creating more uniform and comfortable temperatures. The same principle applies to keeping rooms warm during the winter. Since air conditioners consume a lot of energy, setting the temperature just 1°C higher in the summer or 2°C lower in the winter can save over 10% of energy. By using a fan alongside the air conditioner, you can set the temperature between 26°C-28°C in the summer and 16°C-18°C in the winter and still feel cool and warm. Moreover, nowadays many households have air purifiers, and when used in conjunction with a fan for air circulation, it can enhance the purifier's efficiency and improve indoor air quality evenly throughout the space.

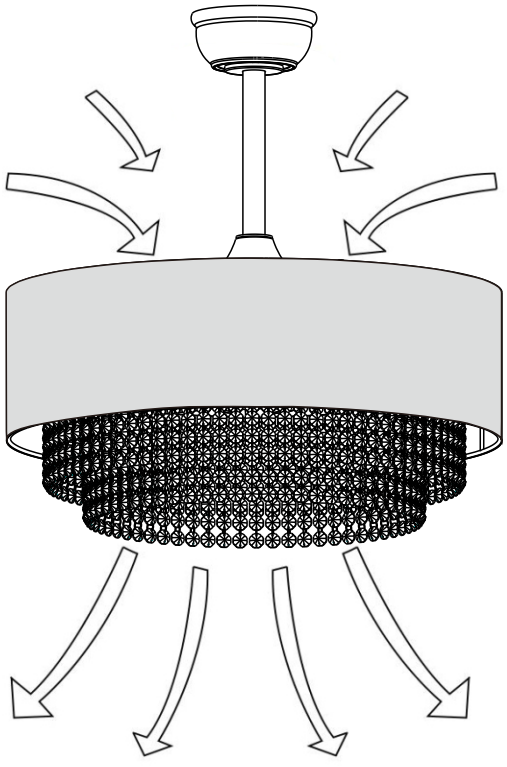

Fan forward

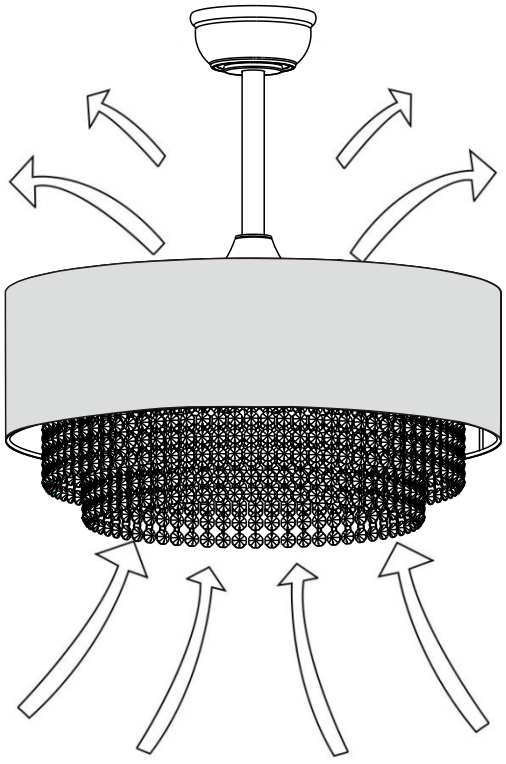

Fan reverse

CONTACT INFORMATION

We want to hear your voice! Feel free to touch base if you encounter any issue when using our product(s) or want to know more about our brand.
We will be more than happy to provide top-notch pre-sales & after-sales service 24/7.

Contact us through Amazon:
1.Go to Your Orders.
2.Find your order in the list.
3.Select Problem with order.
4.Choose your topic from list displayed.
5.Select Contact seller.

Contact us through E-mail:

oursfan @outlook.com