Assembly Instructions

Caution: You must read this Assembly Instructions before you proceed

Care & Maintenance

- Not for commercial use. For residential use only.
- Furniture may scratch floors. We recommend using furniture pads to protect your floors..
- Do not put hot items directly on furniture surface.
- Do not clean furniture with harsh cleansers or polish.
- Do not place furniture under direct sunlight.
- Do not place furniture near heating or cooling vents.
- Do not write on furniture without a padded barrier to protect the surface.
- Do not place furniture outside . For indoor use only.
- Stains may be removed with mild soap solution and damp cloth.
- Children should not climb or jump on the furniture.
- Dust and pick-up spills using a clean, non-colored, lint- free cloth.

Please look in the backrest for hardware packs

CHAIR

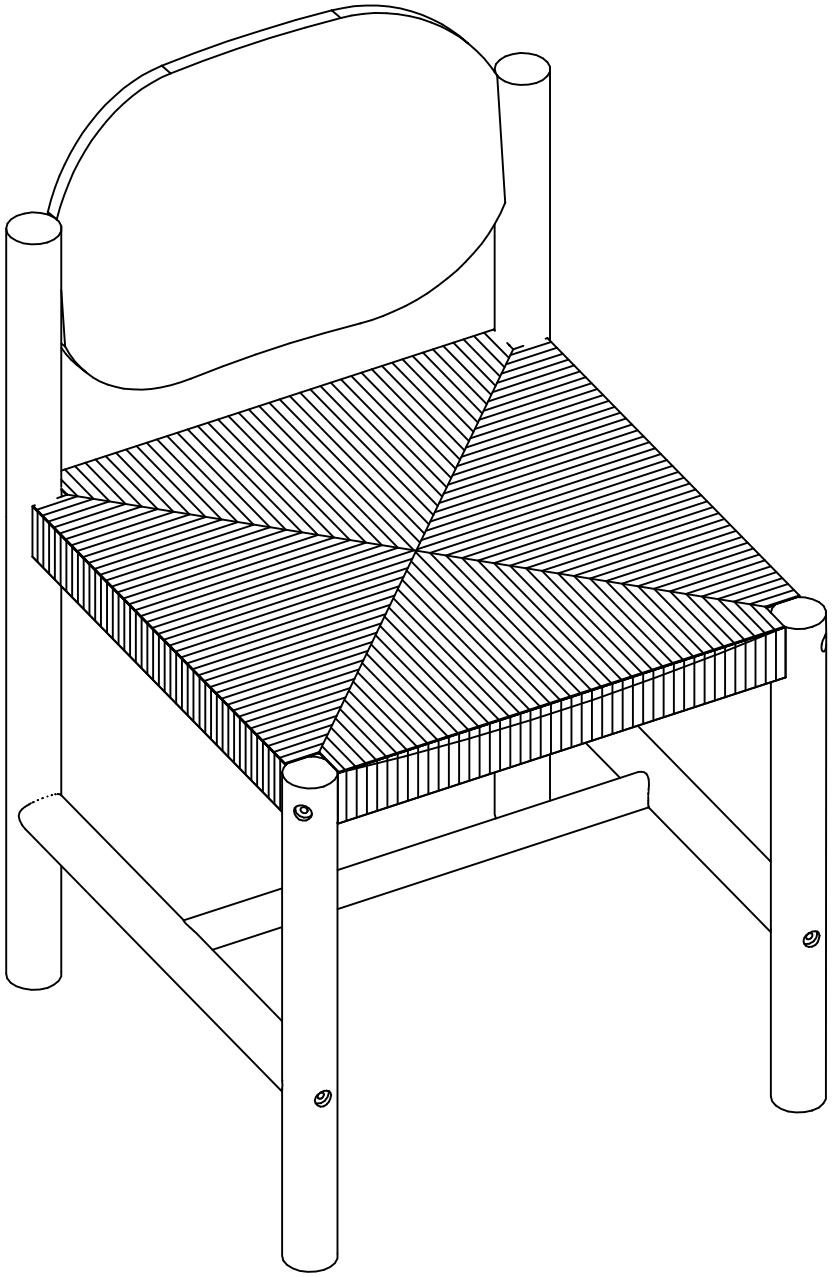

Caution: This Chair is NOT a TOY.
Keep your child/children at bay during the assembly process.
Whenever moving/lifting the Chair and to prevent damage to the Chair, two adult partners may be needed to execute these actions.

Parts List:

Label	Picture	Description	QTY
A	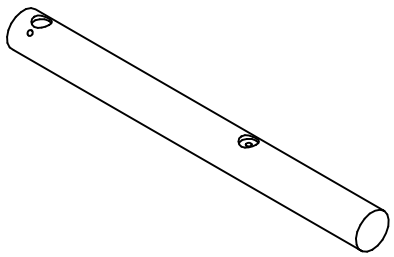	Left Leg Frame	1
B	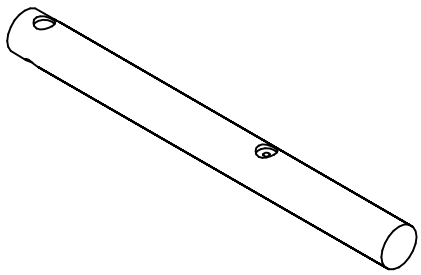	Right Leg Frame	1
C	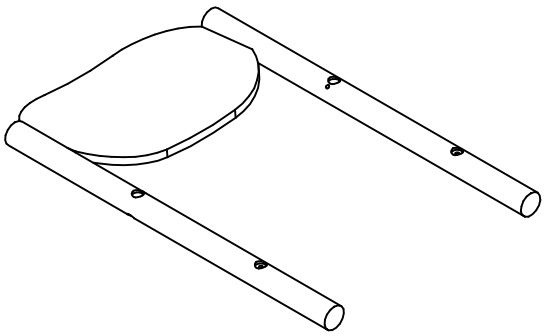	Backrest	1
D	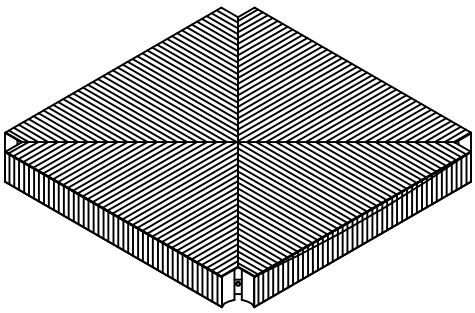	Seat Panel	1
E	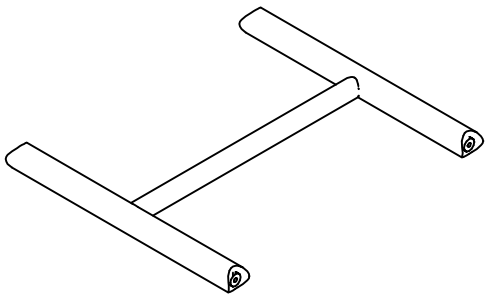	Connecting Bar	1

Hardware:

No	Picture	Description	QTY
①		Plastic Cap	9
②		Bolt (M8x100mm)	5
③		Bolt (M6x80mm)	5
④		Cross Nut (M6x13mm)	5
⑤		Allen Wrench	1

Assembly Preparation:

Before Beginning Assembly:

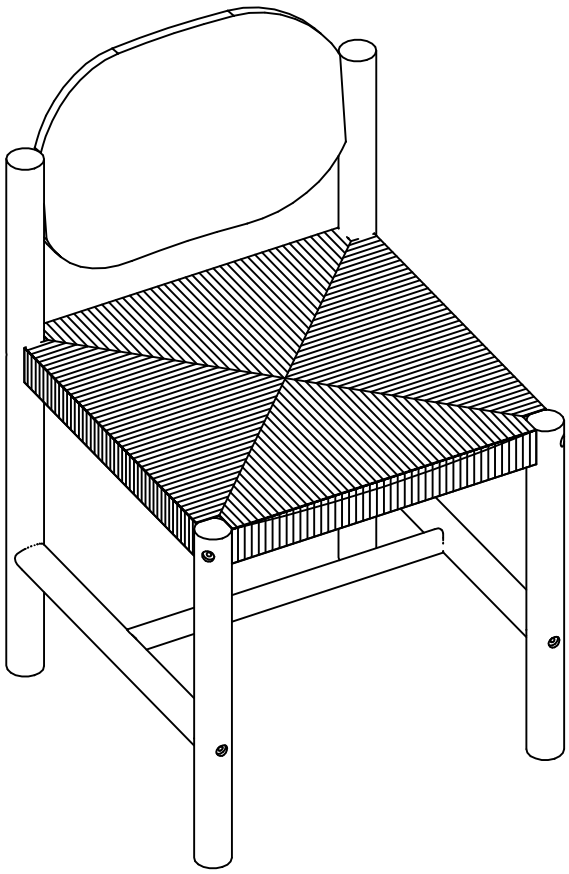

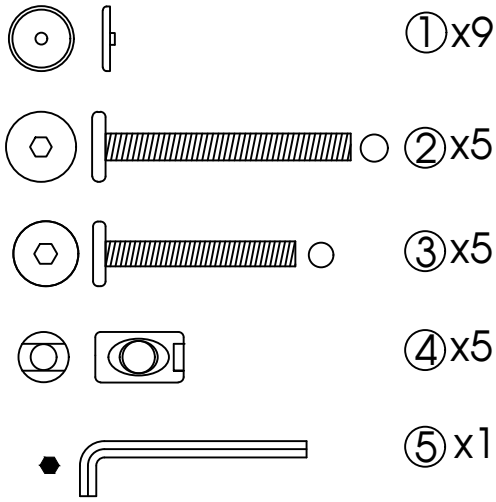

Assembly Steps:

Overview:

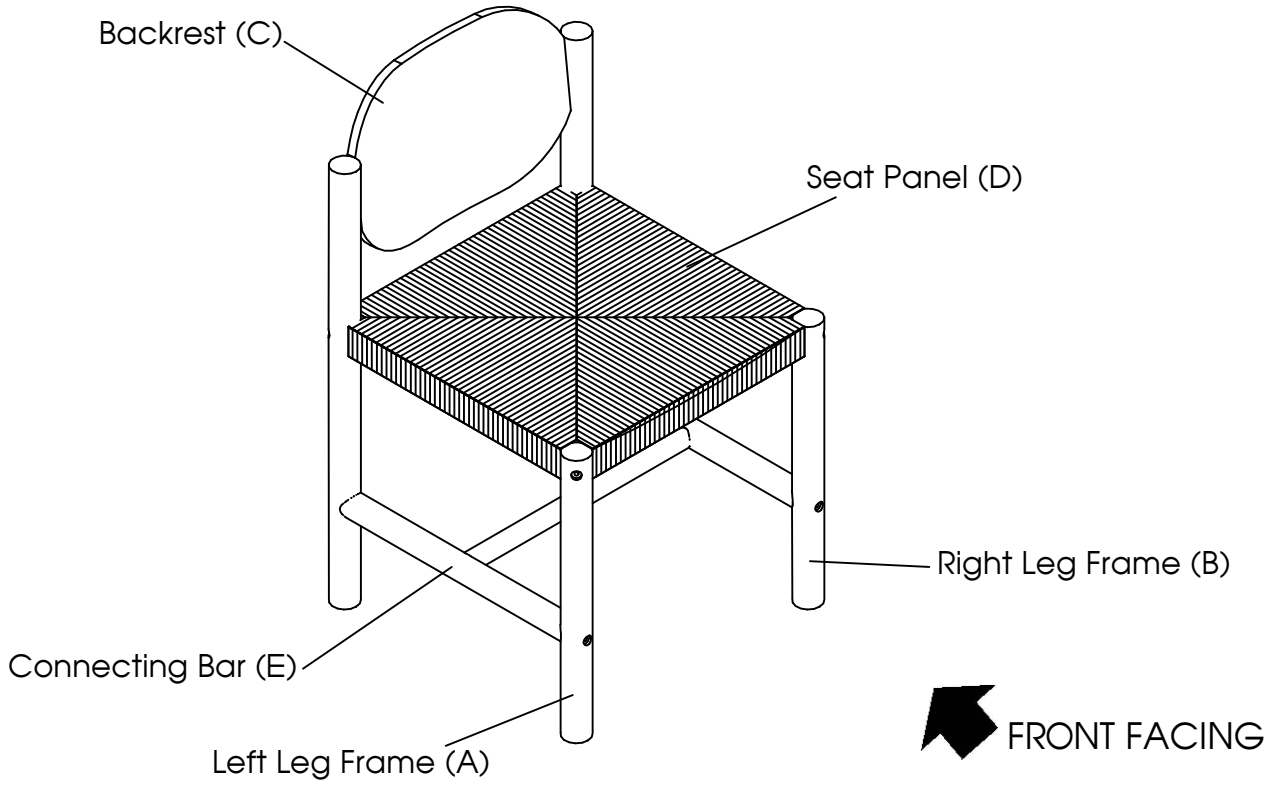

This Chair has multiple parts and may require up to 30 minutes to assemble. To give you an overview of the Chair parts, the above picture is to help you put the various parts into perspective. Please read through the instructions below to familiarise yourself with the parts and steps before assembly.

Step 1:

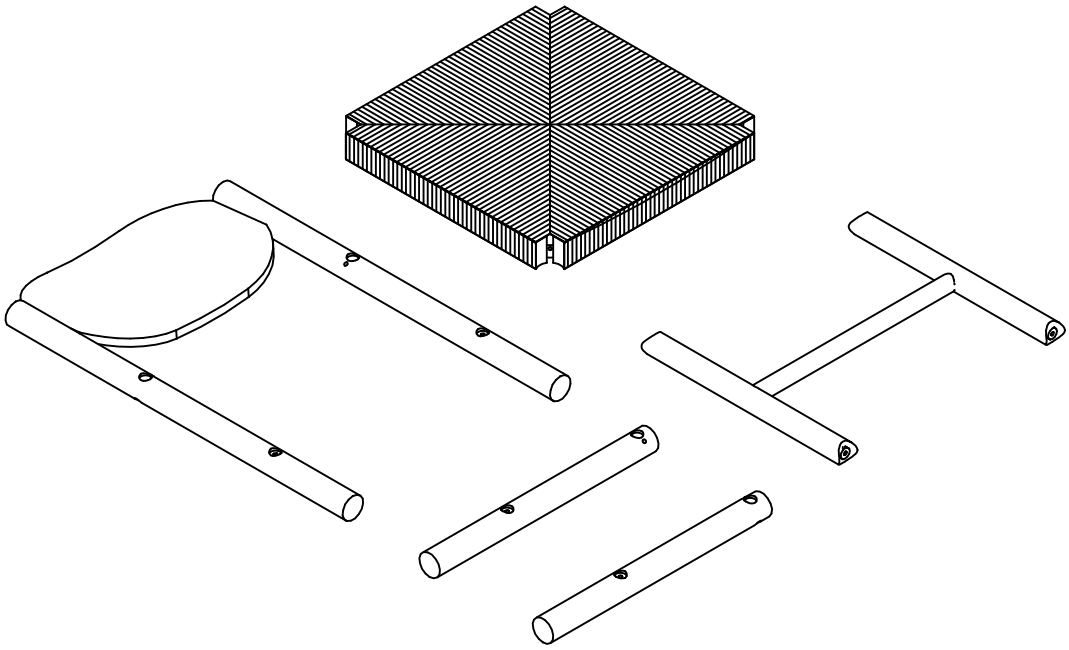

Unpack and place all parts on a clean, non-marring surface.

Step 2:

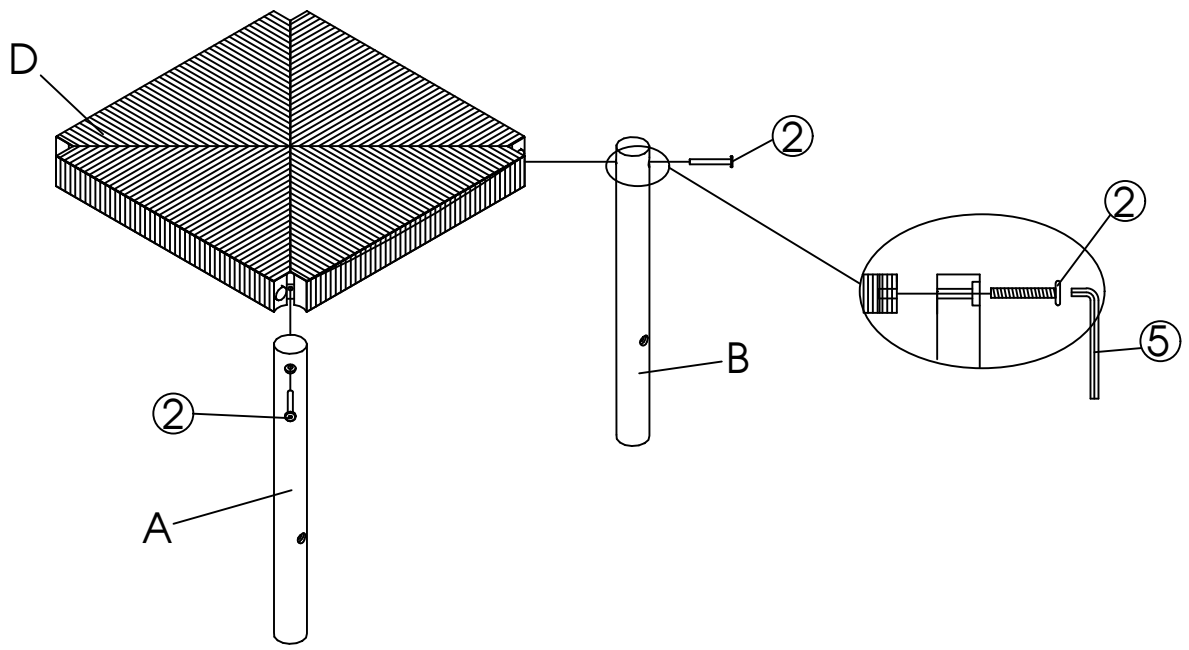

With the help of your adult partner, fix the Left Leg (A), Right Leg (B) with the Seat Panel (D) by using 02 Bolts (2) by Allen Wrench (5). **DO NOT fully tighten the bolts**.

Step 3:

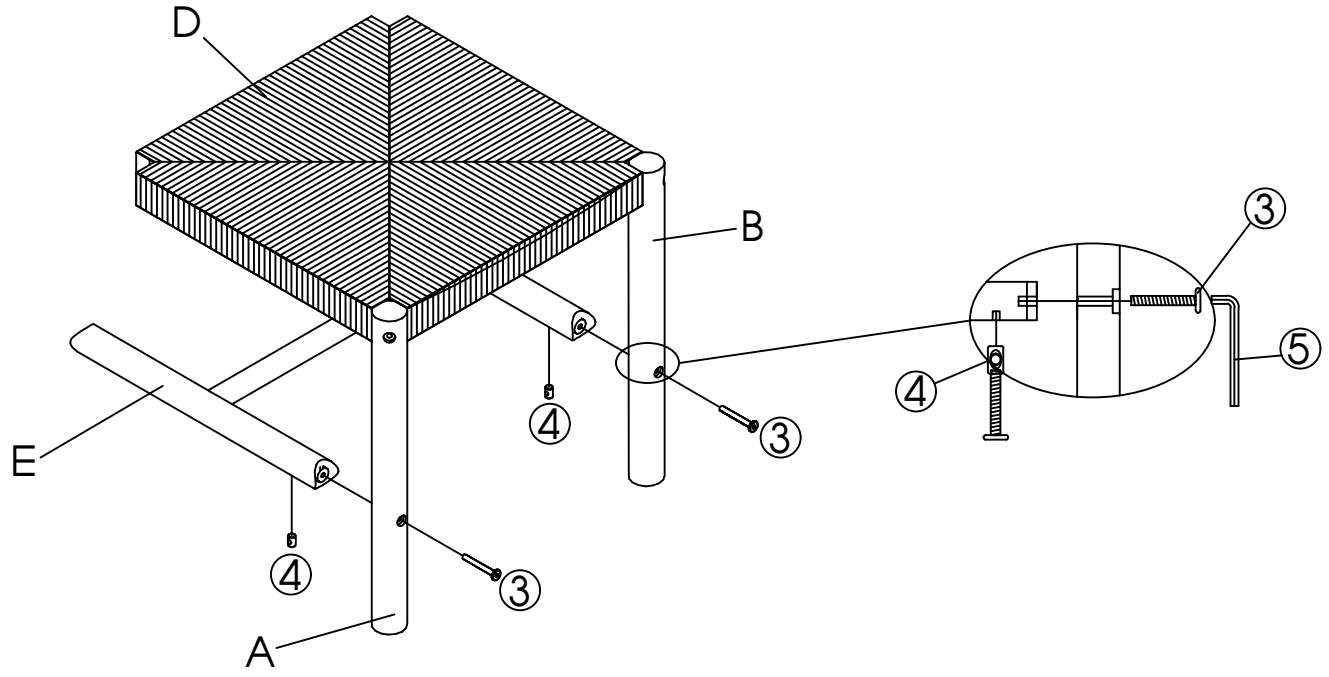

Fix the Connecting Bar (E) with the Front Leg by using 02 Bolts (3), 02 Cross Nuts (4) and Allen Wrench (5). **DO NOT fully tighten the bolts**.

Step 4:

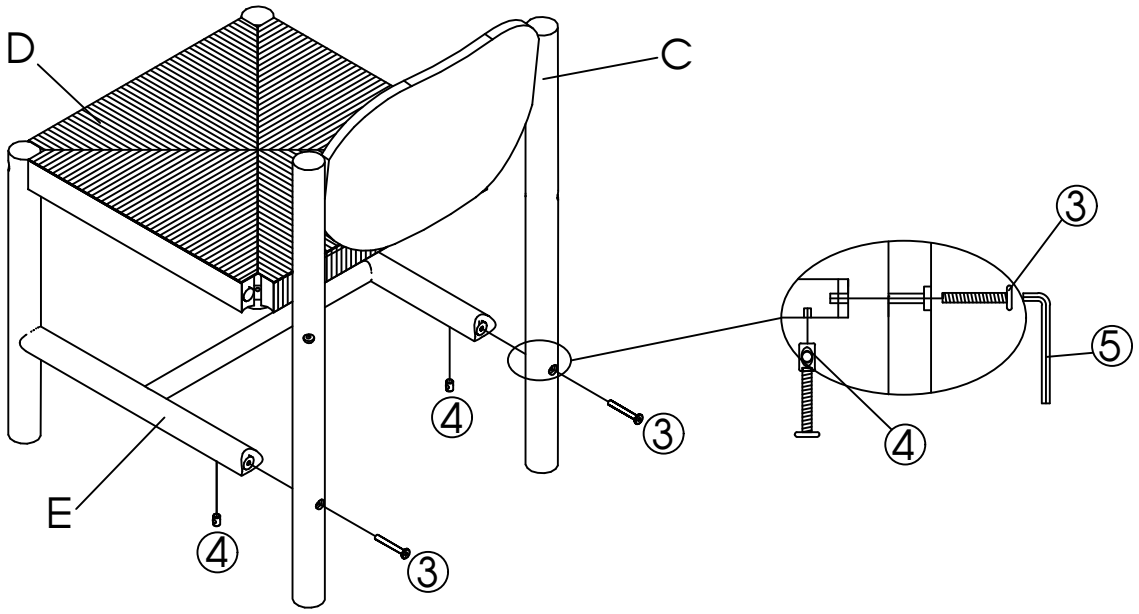

Fix the backrest (C) with Connecting Bar (E) by using 02 Bolts (3), 02 Cross Nuts (4) and Allen Wrench (5). **DO NOT fully tighten the bolts**.

Step 5:

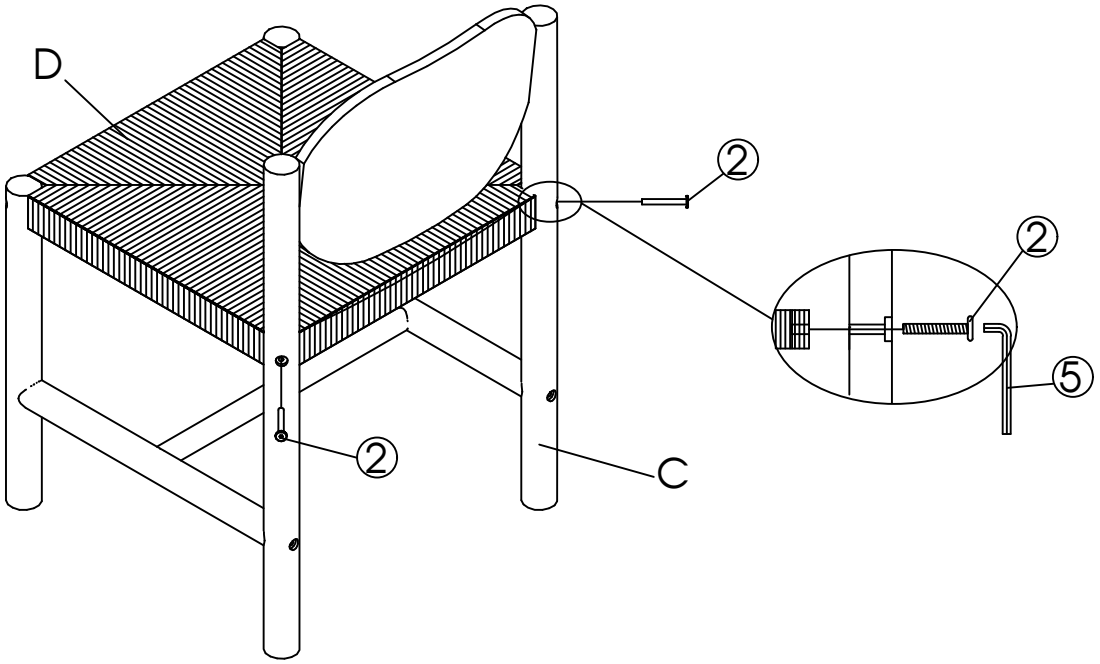

Fix the backrest (C) with Seat Panel (D) by using 02 Bolts (2), and Allen Wrench (5). **DO NOT fully tighten the bolts**.

Step 6:

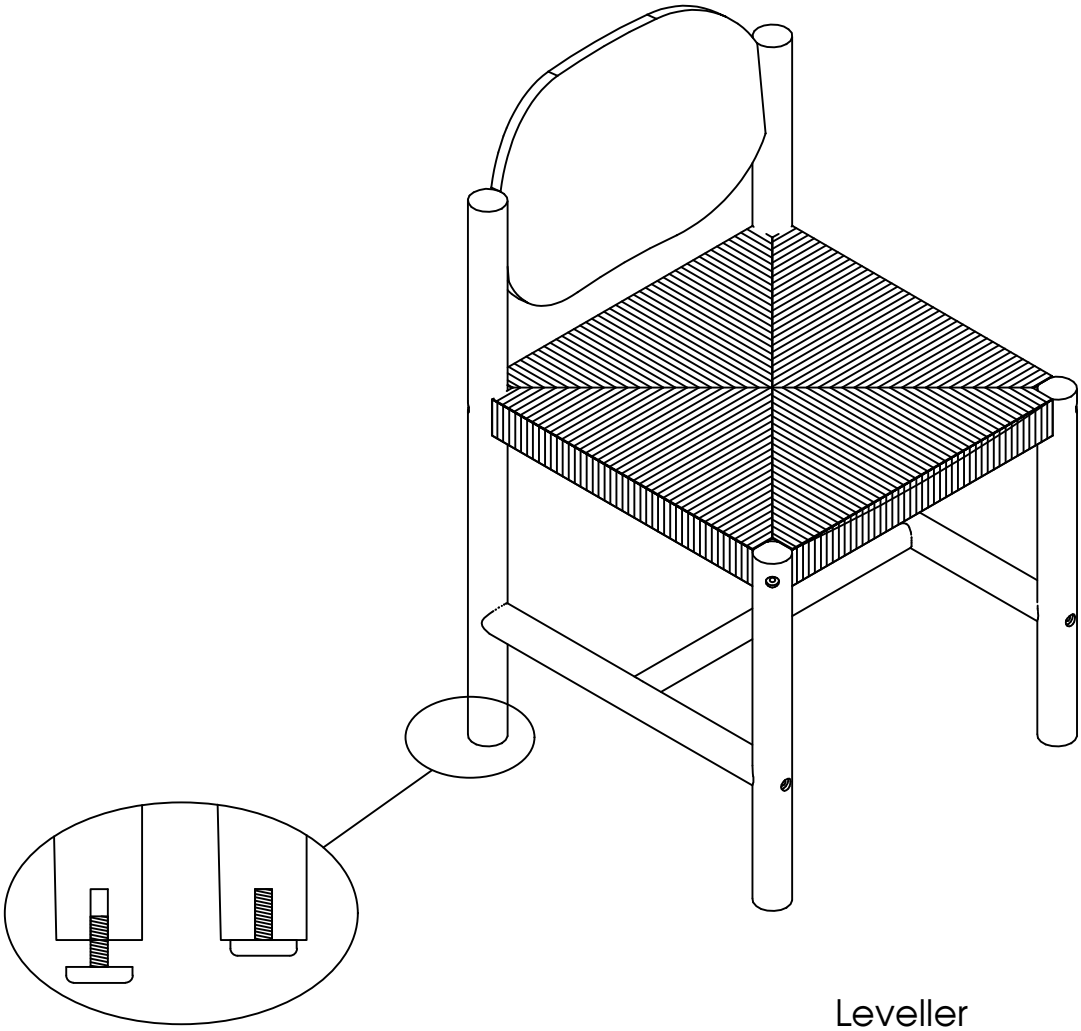

Leveller

Adjust high for balance | Adjust low for balance | Adjust Pre-installed Levellers height for balance

With the help of your adult partner, stand the Chair up.
Exert pressure floorwards, onto the Chair with both your hands.
This pressure will help the Legs and Chair Top reach full alignment status.
Check for wobbles on a LEVEL surface.
If no wobbles are found proceed to tighten the Bolts in a sequential manner, until evenly secured.
When tightening the Bolts tighten sequentially.
If there are still wobbles please loosen or tighten the 01 or all leveller under legs and do the same above process when move the Chair to another place.
WARNING!! IF THE CHAIR IS NOT STABLE, IT COULD LEAD TO DAMAGING THE PRODUCT.

Step 7:

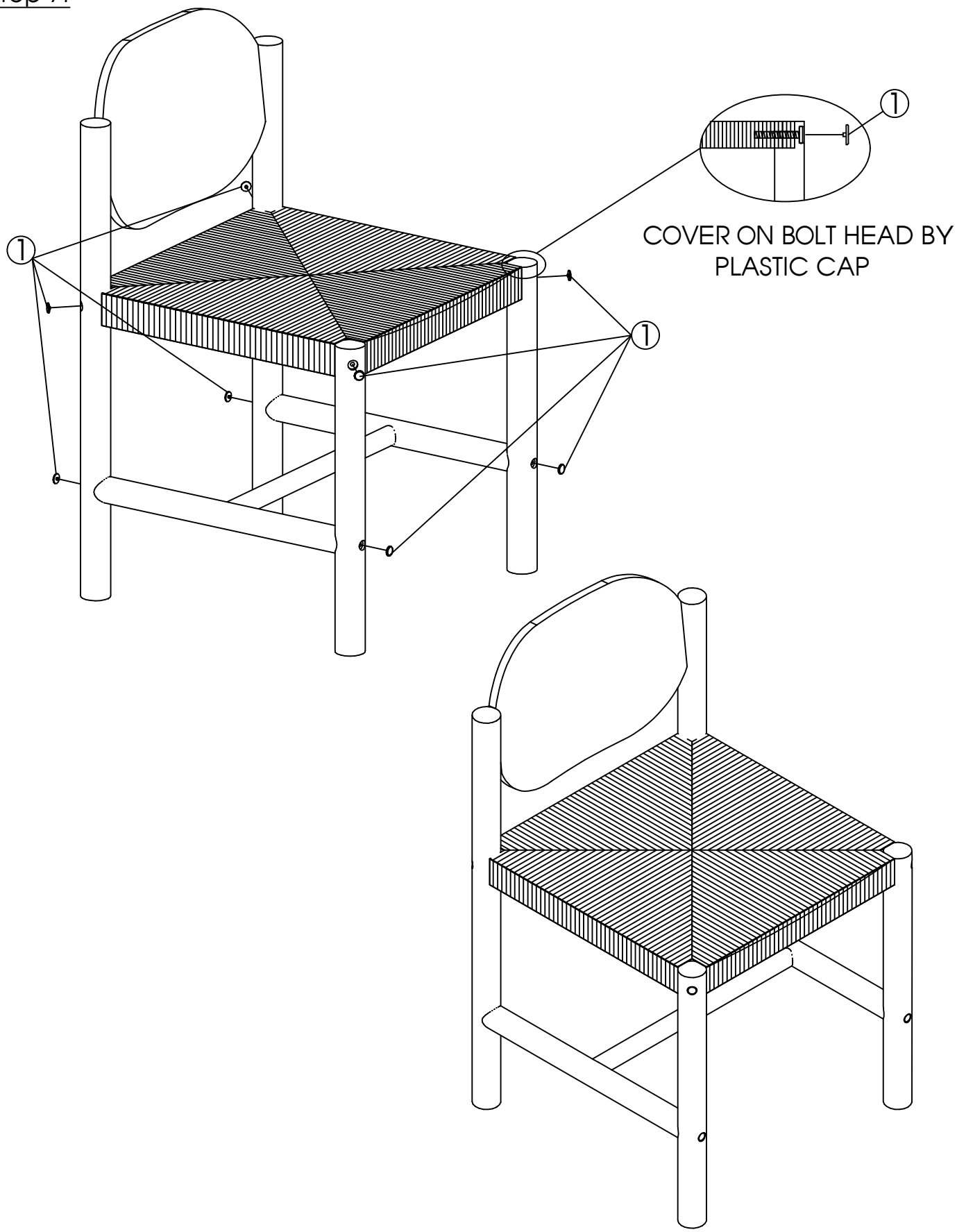

Your Chair is ready for use.
This Chair can only be used on a flat, level surface