USE AND CARE MANUAL

5 LIGHT CHANDELIER

Model number: 21485

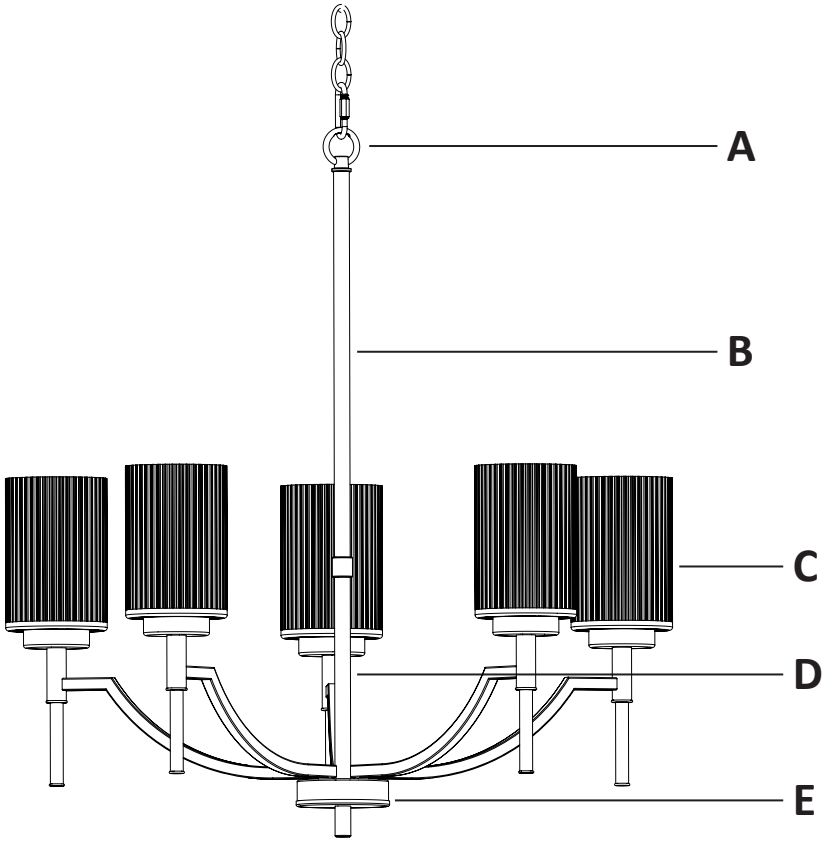

Hardware (Parts are not to scale)

H1 Mounting strip 1 pc 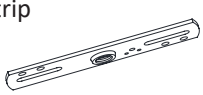	**H2** Outlet box screw 2 pcs 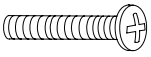	**H3** Threaded tube 1 pc 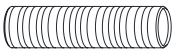	**H4** Hex nut 1 pc 
H5 Lock washer 1 pc 	**H6** Green ground screw (Pre-assembled to mounting strip) 1 pc 	**H7** Wire connector 3 pcs 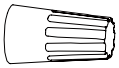	**H8** Screw collar loop 1 pc 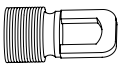
H9 Ring (Pre-assembled to screw collar loop) 1 pc 	**H10** Quick link 2 pcs 	**H11** Canopy 1 pc 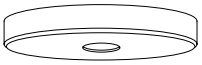	**H12** Chain 1 pc 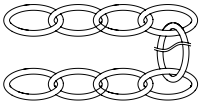
H13 Socket ring 5 pcs 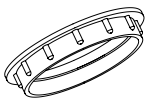	**H14** Socket ring key 1 pc 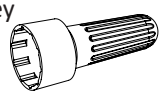	**H15** Decorative tube 5 pcs 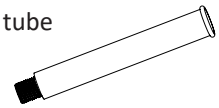	

THIS MANUAL CONTAINS IMPORTANT SAFETY INFORMATION. PLEASE READ AND KEEP FOR FUTURE REFERENCE.

IMPORTANT SAFETY INFORMATION

- Please read and understand this entire manual before attempting to assemble, operate or install the product.
- Turn off electricity at main fuse box (or circuit breaker box) before beginning installation by removing fuse (or switching off circuit breaker).
- Be careful not to damage or cut the wire insulation (covering) during fixture installation. Do not permit wires to contact any surface having a sharp edge. To do so may damage or cut the wire insulation, which could cause serious injury or death from electric shock.
- All electrical connections must be in agreement with local codes, ordinances or the national electric code (NEC). Contact your municipal building department to learn about your local codes, permits and/or inspections. If you do not have electrical wiring experience, refer to a do-it-yourself wiring handbook or have your fixture installed by a qualified licensed electrician.
- Risk of fire – most dwellings built before 1985 have supply wire rated for 140°F/60°C. Consult a qualified electrician before installation.
- Do not exceed the recommended wattage. Refer to the re-lamping label on the light socket for maximum wattage.
- Do not replace a bulb when electrical outlet switch is turned to the “ON” position.
- Do not immerse your lamp in water; doing so will damage the wire.
- Keep materials that burn easily away from lighted bulbs.

PREPARATION

- Before beginning assembly, installation or operation of product, make sure all parts are present. Compare parts with package contents list and diagram on the previous page. If any part is missing or damaged, do not attempt to assemble, install or operate the product. Contact customer service for replacement parts.
- Tools required for assembly (not included): flathead screwdriver, phillips screwdriver, pliers, electrical tape, wire cutters, safety glasses, ladder, wire stripper.

INSTALLATION

1 Assembling the fixture body

- Adjust five arms to make an equal distance between arms as shown.
- Guide the fixture wire with the bare copper ground wire through the tubes (D, B) and the loop assembly (A).
- Tighten the loop assembly (A) and the tubes (D, B) together onto the fixture body (E) until secured respectively as shown in the diagram.
- Tighten the decorative tubes (H15) onto the bottom of the arms of the fixture body (E).

Note: Do not adjust the fully fixed arm. The fully fixed arm is labeled and marked "Unadjustable arm".

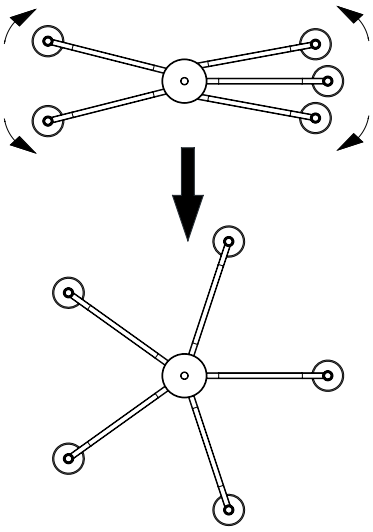

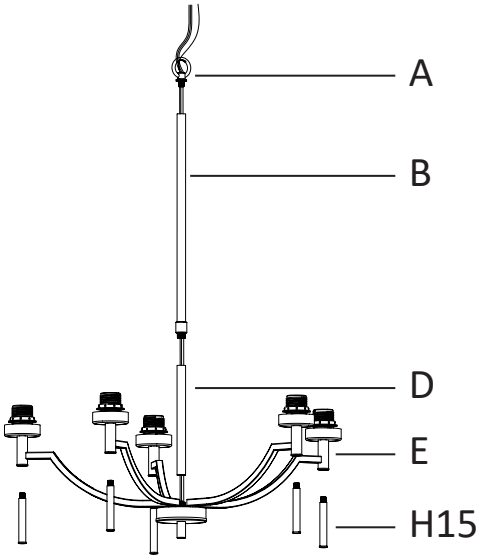

INSTALLATION (continued)

2 Preparing the mounting strip

- Screw the threaded tube (H3) into the mounting strip (H1), and secure it using the lock washer (H5) and hex nut (H4).

NOTE: The threaded tube (H3) should extend long enough to protrude through the canopy, when it is mounted. (Adjust as needed.)

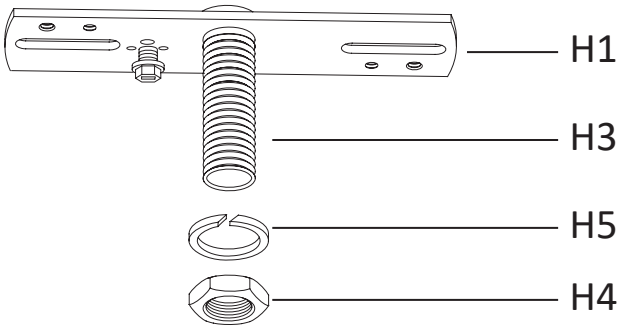

3 Installing the mounting strip

- Fasten the mounting strip (H1) onto the outlet box using two outlet box screws (H2).

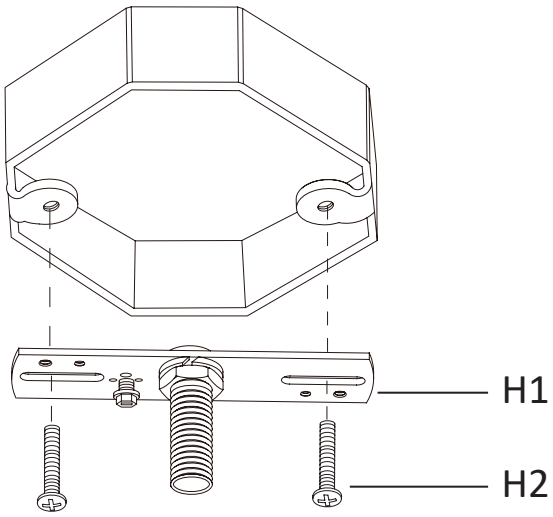

4 Attaching the canopy to the outlet box

- Place the canopy (H11) over the threaded tube (H3), and screw the screw collar loop (H8) onto the threaded tube (H3).
- Secure the canopy (H11) using the ring (H9).

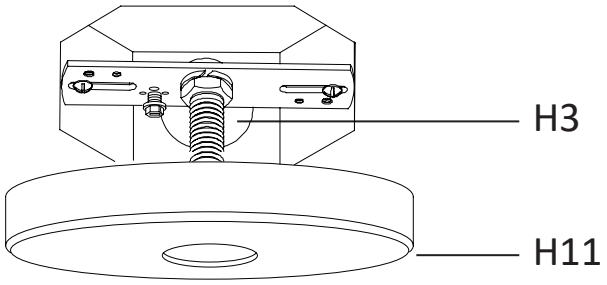

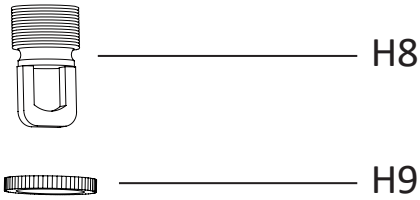

5 Attaching the chain

- Adjust the chain (H12) to the desired height by spreading the end link of the chain (H12) apart. Use a pair of pliers and a screwdriver (not included). Wrap a soft cloth around the pliers to protect the chain's finish.
- Open the first quick link (H10), connect chain (H12) to the loop (H13) and close the quick link (H10).
- Open the second quick link (H10), connect other end of chain (H12) to the screw collar loop (H8) and close the quick link (H12).

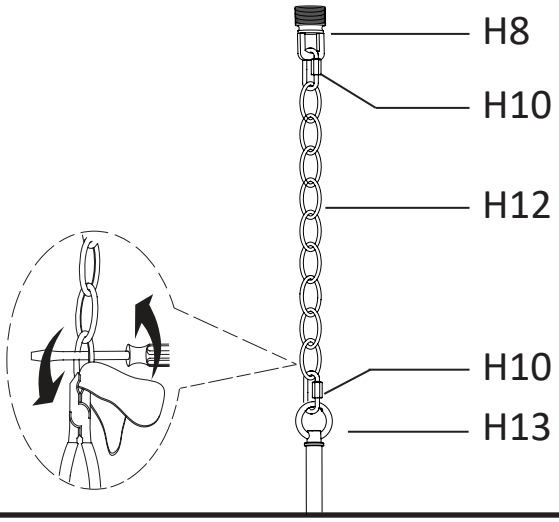

6 Weaving the fixture wire

- Unscrew the ring (H9) from the screw collar loop (H8), and lower the canopy (H11) and ring (H9) over the chain (H12) on the fixture.
- Weave the fixture wires and bare copper ground wire up through the chain (H12), ring (H9), canopy (H11), screw collar loop (H8), threaded tube (H3), and then into the outlet box.

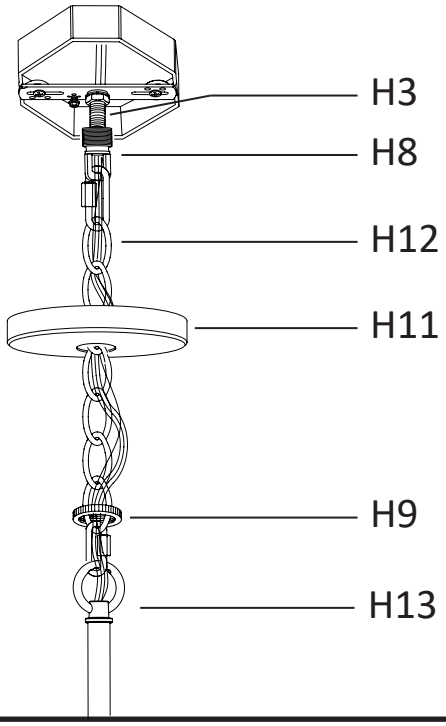

7 Making the electrical connections

- Strip 3/4 in. of insulation from the wire ends.
- Connect the glossy live wire from the fixture to the black wire from the outlet box, and the rough neutral wire from the fixture to the white wire from the outlet box.
- The bare copper ground wire from the fixture must loop one turn under the head of the green ground screw (H6) on the mounting strip (H1) before it is connected to the ground conductor of the supply circuit.
- Cover the wires with wire connectors (H7). Tape the wire connectors (H7) and wires together, and carefully position all wires inside the outlet box.

NOTE: The glossy live wire has the text printed on it; the rough neutral wire has the ridge on it.

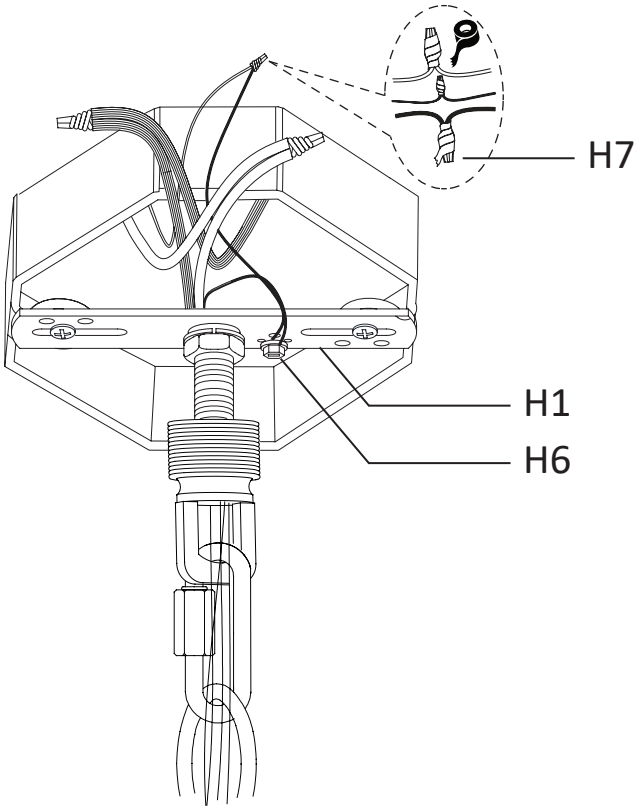

INSTALLATION (continued)

8 Installing the canopy to the outlet box

- Raise the canopy (H11) all the way up to the ceiling, and tighten the ring (H9) onto the screw collar loop (H8) until the canopy (H11) is firmly held against the ceiling.

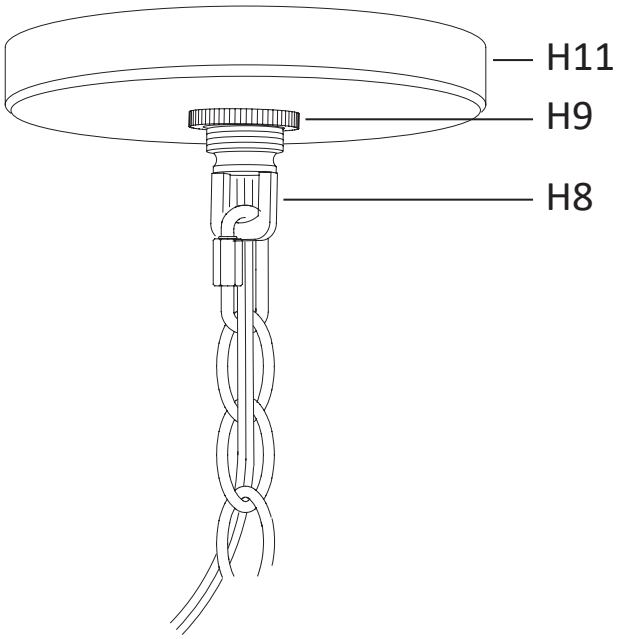

9 Installing the glass shade and the light bulbs

- Unscrew the socket rings (H13) from the sockets on the fixture body (E). Set the glass shades (C) onto each socket, and secure them with the socket rings (H13) with the socket ring key (H14).
- Install the light bulbs (not included) into the socket. Use five **Max 60W medium base (E26) type "A"** bulbs (recommended).

NOTE: You can also use five **MAX 9W medium base (E26) self-ballasted LED** bulbs. Do not exceed the recommended wattage.

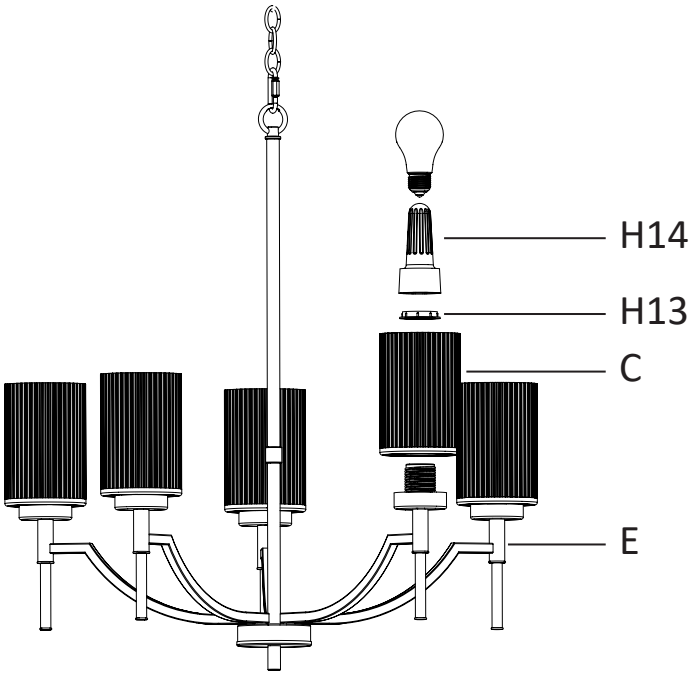

CLEANING

- Do not use any cleaners with chemicals, solvents, or harsh abrasives. Use only a dry, soft cloth to dust or wipe carefully.
- To clean the fixture, disconnect the power by turning off the circuit breaker or by removing the fuse at the fuse box. Use a dry or slightly dampened, clean cloth to wipe the exterior surface of the fixture.

TROUBLESHOOTING

- The light does not come on at all:
  a) Check whether the bulbs were burned out.
  b) Make sure the wall switch is on.
  c) Make sure the wiring is correct.
  d) Make sure the circuit breaker is set in the "ON" position.
- Fuse blows or circuit trips when light is turned on.
  a) Check for crossed wires, ensure wiring is correct.