ITEM NO.	PART NUMBER	DESCRIPTION	QTY.
1	BPDT	Back Plate	2
2	GLRT-16	GLASS	2
3	CRRD-12	Connector	20
4	TU12-1.8	Tube-12, L=1.8	4
5	HBGAL-FITT	HUB-CON	4
6	TU12-2	Tube-12, L=2	4
7	HBBTT-78	Hub	6
8	CARD-58	LOCK	4
9	TU38-13.5	TUBE -38,L=13.5	3
10	TU12-6	SUPPORT TUBE	2
11	TU12-3	Bottom Tube	2

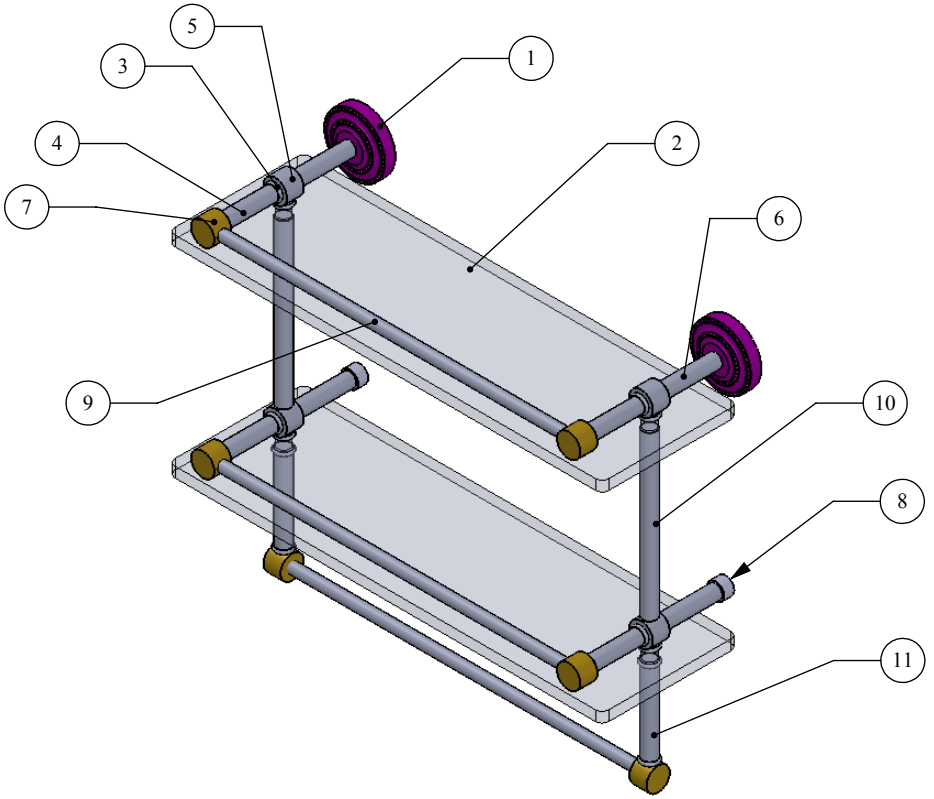

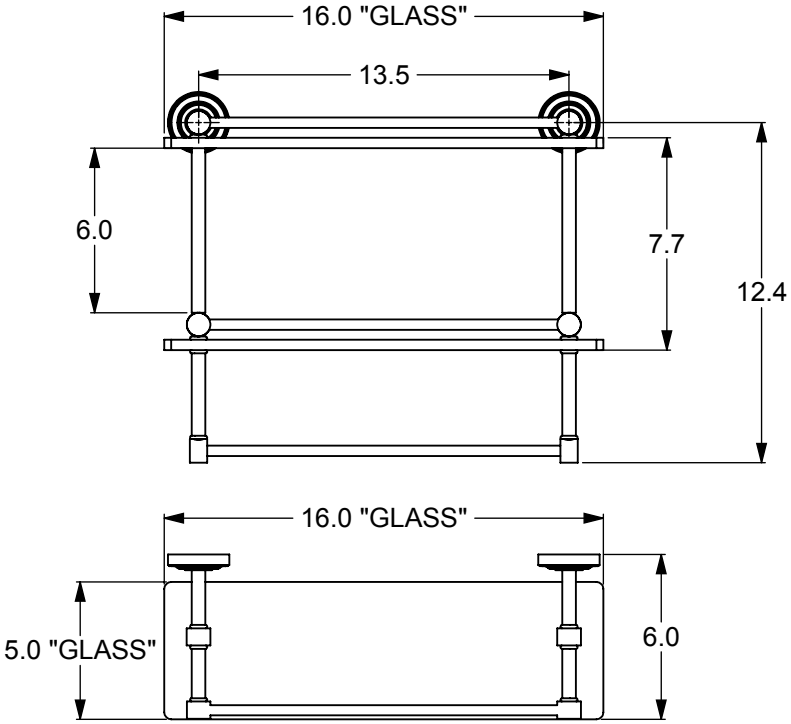

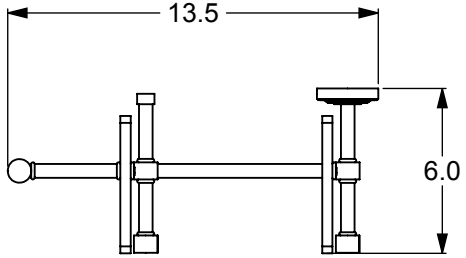

CONFIDENTIALITY/LIMITED LIABILITY STATEMENT
This document (and any files attached to it) is confidential and intended only for the person or entity to which it is delivered. If you are not the intended recipient, then you have received this document by mistake and any use, dissemination, forwarding, printing or copying of this document and its file attachments is prohibited. Please notify ALLIED BRASS INC. immediately either by telephone or by email, delete the misdirected document from your system and destroy any copies you have made of it. We do not accept any liability for any loss or damage which may arise from your receipt of this document.

UNLESS OTHERWISE STATED			INITIALS	DATE	ITEM	QTY	DRG/PART NO	CLIENT:		
DO NOT SCALE	X.XXX	+/-0.025	DESIGNED	IJM	MATERIAL	BRASS	WEIGHT		FINISH	TBD
DRAWING	X.XX	+/-0.1	DRAWN	IJM	HEAT TREAT	NA			QUANTITY	
CHAMFER ALL	X.X	+/-0.25	CHECKED	R. ANDRIS	CUSTOMER		CUSTOMER No		---	
EDGES 0.5X45°	X	+/-0.75	PROJ.ENG		DESCRIPTION:				DRAWING No.	REV
DRAWING ISO	**ANGLES**		SAFETY		DT-2-16TB-GAL				DT-2-16TB-GAL	0
	X.XX	+/-0.05°	APPROVED	R. ANDRIS						
	X.X	+/-0.1°	FILENAME	DT-2-16TB-GAL					SCALE 1:7	SHEET: 01 A4
FIRST ANGLE PROJECTION	X	+/-0.5°								
	MACHINED FINISH	3.2								